REDACTED

USSC Paper #	Project #	Project Description	FY2020 Proposed Capital Budget	DIV 4-4 Attachment Page Reference
USSC-12-472v3 (DCIG1008P92)	C028920	NEW LONDON AVE (D-SUB)	50	
	C028921	NEW LONDON AVE (D-LINE)	100	
USSC-12-472v3 (DCIG1008P92) Total			**150**	**Page 3 of 656**
USSC-13-285 v2	C050758	LEE ST MC RETIREMENT (D-LINE)	300	
	C051118	LEE ST MC RETIREMENT (D-SUB)	50	
USSC-13-285 v2 Total			**350**	**Page 67 of 656**
USSC-13-294	C050760	COTTAGE ST MC RETIREMENT (D-LINE)	2,500	
	C051126	COTTAGE ST MC RETIREMENT (D-SUB)	50	
USSC-13-294 Total			**2,550**	**Page 91 of 656**
USSC-13-317	C049462	IRURD SIGNAL RIDGE, EAST GREENWICH	150	
USSC-13-317 Total			**150**	**Page 102 of 656**
USSC-13-318	C049356	IRURD SILVER MAPLE PHASE 2	400	
USSC-13-318 Total			**400**	**Page 112 of 656**
USSC-13-323	C047829	IRURD HIGH HAWK	50	
USSC-13-323 Total			**50**	**Page 122 of 656**
USSC-14-009 v5	C046352	VOLT VAR DLINE RI PILOT PROJECT	450	
USSC-14-009 v5 Total			**450**	**Page 132 of 656**
USSC-14-195 v3	C051213	SOUTH ST REPL INDOOR SUBST D-LINE	1,800	
USSC-14-195 v3 Total			**1,800**	**Page 222 of 656**
USSC-14-223 v3	C051824	LAFAYETTE SUB TRANSFORMER REPLACEME	100	
USSC-14-223 v3 Total			**100**	**Page 301 of 656**
USSC-14-261v3	CD00656	JEPSON SUBSTATION (D-SUB)	5,900	
USSC-14-261v3 Total			**5,900**	**Page 333 of 656**
USSC-14-262 v3	C015158	NEWPORT SUBSTATION (D-SUB)	750	
	C024159	NEWPORT 69KV LINE 63 (D-LINE)	400	
	C028628	NEWPORT SUBTRANS & DIST CONVERSION	2,800	
	C054054	JEPSON SUBSTATION (D-LINE)	3,400	
	C058310	HARRISON SUB IMPROVEMENTS (D-SUB)	200	
	C058401	MERTON SUB IMPROVEMENTS (D-SUB)	180	
	C058404	KINGSTON SUB IMPROVEMENTS (D-SUB)	225	
	CD00649	GATE 2 SUBSTATION (D-SUB)	200	
USSC-14-262 v3 Total			**8,155**	**Page 375 of 656**
USSC-15-109	C053657	SOUTHEAST SUBSTATION (D-SUB)	4,150	
	C053658	SOUTHEAST SUBSTATION (D-LINE)	2,100	
USSC-15-109 Total			**6,250**	**Page 453 of 656**
USSC-15-110	C055215	WESTERLY FLOOD RESTORATION (D-LINE)	90	
USSC-15-110 Total			**90**	**Page 477 of 656**
USSC-15-290 v2	C055844	W CRANSTON TRANSFORMER 2 REPLACEME	80	
USSC-15-290 v2 Total			**80**	**Page 493 of 656**
USSC-16-175	C046726	EAST PROVIDENCE SUBSTATION (D-SUB)	890	
	C046727	EAST PROVIDENCE SUBSTATION (D-LINE)	390	
USSC-16-175 Total			**1,280**	**Page 515 of 656**
USSC-16-305	C051205	DYER ST REPLACE INDOOR SUBST D-SUB	4,600	
	C051211	DYER ST REPLACE INDOOR SUBST D-LINE	300	
USSC-16-305 Total			**4,900**	**Page 531 of 656**
USSC-17-002	C065166	WARREN SUB EXPANSION (D-SUB)	300	
	C065187	WARREN SUB EXPANSION (D-LINE)	300	
USSC-17-002 Total			**600**	**Page 552 of 656**
USSC-17-249	C055367	RI UG CABLE REPL PROGRAM FDR 54K21	50	
USSC-17-249 Total			**50**	**Page 566 of 656**
USSC-18-077FY19BL	CN04904	NARRAGANSETT METER PURCHASES	1,620	
	CN04920	NARRAGANSETT TRANSFORMER PURCHASES	3,515	
	COS0002	OCEAN ST-DIST-SUBS BLANKET.	705	
	COS0004	OCEAN ST-DIST-METER BLANKET	910	
	COS0006	OCEAN ST-DIST-GENL EQUIP BLANKET	300	
	COS0010	OCEAN ST-DIST-NEW BUS-RESID BLANKT	5,310	
	COS0011	OCEAN ST-DIST-NEW BUS-COMM BLANKET.	4,580	

REDACTED

USSC Paper #	Project #	Project Description	FY2020 Proposed Capital Budget	DIV 4-4 Attachment Page Reference
USSC-18-077FY19BL	COS0012	OCEAN ST-DIST-ST LIGHT BLANKET.	150	
	COS0013	OCEAN ST-DIST-PUBLIC REQUIRE BLNKT	835	
	COS0014	OCEAN ST-DIST-DAMAGE&FAILURE BLNKT	10,330	
	COS0015	OCEAN ST-DIST-RELIABILITY BLANKET.	845	
	COS0016	OCEAN ST-DIST-LOAD RELIEF BLANKET.	265	
	COS0017	OCEAN ST-DIST-ASSET REPLACE BLANKT	3,200	
	COS0022	OCEAN ST-DIST-3RD PARTY ATTCH BLNKT	165	
	COS0025	OS-DIST-SUBSTATION LR/REL BLNKT	215	
	COS0026	OS-DIST-SUBSTATION ASSET REPL BLNK	215	
	COS0091	LAND AND LAND RIGHTS RI ELECT	430	
USSC-18-077FY19BL Total			**33,590**	**Page 571 of 656**
USSC-18-181	C074804	APPONAUG 23KV RETIREMENTS (D-SUB)	500	
	C074807	APPONAUG 23KV RETIREMENTS (D-LINE)	200	
USSC-18-181 Total			**700**	**Page 579 of 656**
USSC-18-223 FY19 Pr	C022433	OSD STORM CAP CONFIRM PROGRAM PROJ	1,650	
USSC-18-223 FY19 Pr Total			**1,650**	**Page 590 of 656**
USSC-18-234FY19Pr	C026281	I&M - OS D-LINE OH WORK FROM INSP.	425	
USSC-18-234FY19Pr Total			**425**	**Page 599 of 656**
USSC-18-257	C071307	RI UG CABLE REPL PROG- FDRS 79F1&F2	600	
USSC-18-257 Total			**600**	**Page 609 of 656**
USSC-18-282	C046697	HOPE SUBSTATION FLOOD RESTORATION	750	
USSC-18-282 Total			**750**	**Page 615 of 656**
USSC-18-298	C080895	RI VVO/CVR EXP - Nasonville 127, D-Line	530	
	C080896	RI VVO/CVR EXP - Dexter 36 D-Line	550	
	C080899	RI VVO/CVR EXP - Nasonville 127, D-Sub	160	
	C080900	RI VVO/CVR EXP - Dexter 36 D-Sub	160	
USSC-18-298 Total			**1,400**	**Page 624 of 656**
USSC-18-303	C079116	[redacted] 32MW WEST GREENWICH RI	4,000	
USSC-18-303 Total			**4,000**	**Page 637 of 656**
USSC-18-331	C081006	FRANKLIN SQ BREAKER REPLACEMENTS	900	
USSC-18-331 Total			**900**	**Page 648 of 656**
NO USSC PAPER			24,480	
Grand Total			**101,800**	

This document has been reviewed for Critical Energy/Electric Infrastructure Information (CEII). 8/13/2018

Title:	New London Avenue Substation	**Sanction Paper #:**	USSC-12-472 v3
Project #:	C028920, C031696, C028921, C030161, C045313, C054434, C054436	**Sanction Type:**	Sanction
Operating Company:	The Narragansett Electric Co.	**Date of Request:**	08/08/2018
Author:	Kathleen Hurley	**Sponsor:**	Carol A. Sedewitz, VP Electric Asset Management
Utility Service:	Electricity T&D	**Project Manager:**	Kathleen Hurley

1 Executive Summary

1.1 Sanctioning Summary

This paper requests Project Sanction for the New London Ave Substation for funding numbers: C028920, C031696, C028921, C030161, C045313, C054434, and C054436 in the amount of $20.163M with a tolerance of +/- 10% for the purposes of full implementation.

This sanction amount is $20.163M broken down into:

$18.509M Capex
$ 0.823M Opex
$ 0.831M Removal

This project has undergone a Capital Efficiency Review with the following determination:

This project is in final design and/or has secured the necessary agency approvals to proceed and is ready to be released for construction. At this stage, re-evaluation of the project design would likely result in significant delays to the project schedule and an increase in cost. This project will be evaluated for any procurement or construction efficiency opportunities upon its release for construction.

1.2 Project Summary

A new 115/12.47 kV metal clad substation with 24/32/40 MVA Load Tap Changing (LTC) transformer and four feeder positions is proposed for New London Avenue, Warwick, RI. This project will add distribution capacity in an area that is heavily loaded. The new capacity will relieve transformers, supply lines and distribution feeders that are projected to exceed their summer normal ratings.

The station will be located between West Cranston #21 and Drumrock #14 substations and supplied by a 115kV tap from the existing T-172S transmission line.

1.3 *Summary of Projects*

Project Number	Project Type (Elec only)	Project Title	Estimate Amount ($M)
C028920	D-Sub	New London Ave- D-Sub	10.017
C028921	D-Line	New London Ave- D-Line	6.564
C045313	T-Sub	New London Ave- T-Sub	0.165
C031696	T-Line	New London Ave- T-Line	2.395
C054434	T-Sub	New London Ave- T-Sub	0.143
C054436	T-Sub	New London Ave- T-Sub	0.142
C030161	T-Sub	3310 Reconductoring	0.737
		Total	20.163

1.4 *Associated Projects*

Project Number	Project Title	Estimate Amount ($M)
C053723	Arctic Substation Retirement (D-Sub)	0.250
	Total	0.250

1.5 *Prior Sanctioning History*

Date	Governance Body	Sanctioned Amount	Potential Project Investment	Sanction Type	Potential Investment Tolerance
5/14/14	USSC-12-472 v2	$12.600M	$18.600M	Partial Sanction	+/- 25%
12/12/12	USSC USSC-12-472	$0.770M	$ 7.220M	New London Ave Substation #150	+50/-25%

1.6 *Next Planned Sanction Review*

Date (Month/Year)	Purpose of Sanction Review
June 2019	Project Closure Sanction

1.7 *Category*

Category	Reference to Mandate, Policy, NPV, or Other
○ Mandatory ◉ Policy- Driven ○ Justified NPV ○ Other	The investment is policy driven. Without this project, the Company will not be able to provide reliable electric service to the customers in the Central Rhode Island West study area.

1.8 *Asset Management Risk Score*

Asset Management Risk Score: _39

Primary Risk Score Driver: (Policy Driven Projects Only)

◉ Reliability ○ Environment ○ Health & Safety ○ Not Policy Driven

1.9 *Complexity Level*

◉ High Complexity ○ Medium Complexity ○ Low Complexity ○ N/A

Complexity Score: __29

1.10 *Process Hazard Assessment*

A Process Hazard Assessment (PHA) is required for this project:

◉ Yes ○ No

1.11 *Business Plan*

Business Plan Name & Period	Project included in approved Business Plan?	Over / Under Business Plan	Project Cost relative to approved Business Plan ($)
FY19-23 NE Distribution Electric Capital Plan	◉ Yes ○ No	◉ Over ○ Under ○ NA	$1.876M
FY19-23 NE Transmission Electric Capital Plan	◉ Yes ○ No	○ Over ◉ Under ○ NA	$0.012M

1.12 *If cost > approved Business Plan how will this be funded?*

Re-allocation of funds within the portfolio has been managed and approved by Resource Planning to meet jurisdictional budgetary, statutory and regulatory requirements.

1.13 *Current Planning Horizon*

		Current Planning Horizon						
		Yr. 1	Yr. 2	Yr. 3	Yr. 4	Yr. 5	Yr. 6 +	
$M	Prior Yrs	2018/19	2019/20	2020/21	2021/22	2022/23	2023/24	Total
CapEx	10.364	8.000	0.145	0.000	0.000	0.000	0.000	18.509
OpEx	0.534	0.289	0.000	0.000	0.000	0.000	0.000	0.823
Removal	0.397	0.434	0.000	0.000	0.000	0.000	0.000	0.831
CIAC/Reimbursement	0.000	0.000	0.000	0.000	0.000	0.000	0.000	0.000
Total	11.295	8.723	0.145	0.000	0.000	0.000	0.000	20.163

1.14 *Key Milestones*

Milestone	Target Date: (Month/Year)
Partial Sanction	May 2014
Engineering Design Complete - EDC	July 2015
Construction Start	July 2016
ISO Facility Rating	May 2018
Project Sanction	August 2018
Ready for Load/Use	October 2018
Construction Complete - CC	December 2018
Project Closure Sanction	June 2019

1.15 *Resources, Operations and Procurement*

Resource Sourcing			
Engineering & Design Resources to be provided	☑ Internal		☑ Contractor
Construction/Implementation Resources to be provided	☑ Internal		☑ Contractor
Resource Delivery			
Availability of internal resources to deliver project:	○ Red	○ Amber	◉ Green
Availability of external resources to deliver project:	○ Red	○ Amber	◉ Green
Operational Impact			
Outage impact on network system:	○ Red	○ Amber	◉ Green
Procurement Impact			
Procurement impact on network system:	○ Red	○ Amber	◉ Green

1.16 *Key Issues (include mitigation of Red or Amber Resources)*

1	Completing work within the scheduled outages. The West Cranston Substation construction start depends on the New London Ave final outage.

1.17 *Climate Change*

Contribution to National Grid's 2050 80% emissions reduction target:	◉ Neutral	○ Positive	○ Negative
Impact on adaptability of network for future climate change:	◉ Neutral	○ Positive	○ Negative

1.18 *List References*

1	USSC-12-472 – New London Ave Substation #150 December 2012
2	SG114 - Strategy to Build a 115/12.5kV Substation in West Warwick, RI June 2009
3	PWS0922 - A New 115/12.5kV Substation in West Warwick RI June 2009

REDACTED

2 Decisions

The US Sanctioning Committee (USSC) at a meeting held on 8/8/2018:

(a) APPROVED this paper and the investment of $20.163M and a tolerance of +/- 10%

(b) NOTED that Kathleen Hurley is the Project Manager and has the approved financial delegation.

Signature.....Date..8/9/18....

David H. Campbell, Vice President ServCo Business Partnering, USSC Chair

3 *Sanction Paper Detail*

Title:	New London Avenue Substation #150	**Sanction Paper #:**	USSC-12-472 v3
Project #:	C028920, C031696, C028921, C030161, C045313, C054434, C054436	**Sanction Type:**	Sanction
Operating Company:	The Narragansett Electric Co.	**Date of Request:**	8/8/2018
Author:	Kathleen Hurley	**Sponsor:**	Carol A. Sedewitz, VP Electric Asset Management
Utility Service:	Electricity T&D	**Project Manager:**	Kathleen Hurley

3.1 *Background*

The Central Rhode Island West study area encompasses the Towns of Coventry, West Greenwich, and West Warwick and sections of the Cities of Cranston and Warwick, and Towns of East Greenwich, Exeter, and Scituate. The area load peaked at approximately 169 MVA in 2012 with 47,000 customers served. The study area and existing area substations are shown in Figure 1 of the appendix.

In 2008 a comprehensive study was completed for this area. This study identified an immediate need for new distribution capacity in the area to resolve short-term loading concerns and a new substation in the Warwick/West Warwick area to resolve long-term loading concerns and significant exposure for various N-1 contingencies. The 2012 Annual Capacity Plan still supports the need for a new substation in this area.

The Central Rhode Island West study area is still supplied by a highly utilized supply and distribution system. It is becoming increasingly challenging to operate this system within normal loading limits and to supply load growth in this area. This strategy paper documents the long-term solution for the area.

3.2 *Drivers*

The primary driver is projected thermal overloads of transformers, distribution feeders and supply lines during period of system peak loading. There have been a number of large developments in the area [redacted] that continue to add load to an area with heavily loaded feeders and supply lines. A new modular feeder along with load transfers have been utilized to prevent thermal overloads as a result of the new load.

The tables below show the facilities in the study area that are projected to exceed 100% of their rating during either normal operation or contingencies. Table 1 below shows feeders in the area with loads projected to exceed 100% of their normal rating; Table 2 shows transformers with loads projected to exceed 100% of their normal rating; and Table 3 shows the supply lines that are overloaded during contingencies.

Substation	Feeder	SN Rating (Amps)	2014		2016		2018		2020	
			Amps	%SN	Amps	%SN	Amps	%SN	Amps	%SN
ANTHONY	64F1	361	336	93%	353	98%	359	99%	363	101%
ANTHONY	64F2	361	344	95%	361	100%	367	102%	372	103%
HOPE	15F2	476	465	98%	487	102%	496	104%	502	105%
HOPKINS HILL	63F2	530	512	97%	537	101%	546	103%	553	104%
KENT COUNTY	22F3	530	487	92%	511	96%	520	98%	527	99%
KENT COUNTY	22F4	586	579	99%	607	104%	618	105%	626	107%
ARCTIC	49J4	295	294	100%	308	104%	313	106%	317	108%

Table 1 - Projected loads through 2020 for feeders and loads greater than 100%

Substation	Transformer	2014		2016		2018		2020	
		MVA	% SN	MVA	% SN	MVA	% SN	MVA	% SN
ANTHONY	1	7.3	93%	7.6	98%	7.7	99%	7.8	101%
ANTHONY	2	7.4	95%	7.8	100%	7.9	102%	8.0	103%

Table 2 - Projected Loads through 2020 for Transformers with Loads Greater than 100%

Circuit	Line Section		2014		2016		2018		2020	
	From	To	MVA	% SE	MVA	% SE	MVA	% SE	MVA	% SE
2230	Natick 29 Tap	Artic 49 Tap	37.5	106%	39.3	111%	40.0	113%	40.5	114%
2230	Warwick Mall 28 Tap	Natick 29	16.1	105%	16.9	110%	17.2	112%	17.4	113%
2232	Anthony Tap	Coventry Tap	16.0	104%	16.8	110%	17.1	112%	17.3	113%
3310	Kent County 22	Major Potter Rd	53.2	119%	55.8	124%	56.7	127%	57.5	128%
3310	Major Potter Rd	Hopkins Hill Riser	53.2	100%	55.8	105%	56.7	107%	57.5	108%
3311	Kent County 22	Hopkins Hill Tap	61.9	116%	64.9	122%	66.0	124%	66.9	126%
3311	Hopkins Hill Tap	Hopkins Hill 63	53.2	100%	55.8	105%	56.7	107%	57.5	108%

Table 3 - Projected Contingency Loads through 2020 for Supply Line Segments with Loads Greater than 100%

The tables below show projected loading after the New London Ave substation is placed in service. Table 4 below shows projected feeder loading; Table 5 below shows projected transformer loading; and Table 6 below shows projected supply line loading post an n-1 contingency.

Substation	Feeder	SN Rating (Amps)	2014		2016		2018		2020	
			Amps	%SN	Amps	%SN	Amps	%SN	Amps	%SN
ANTHONY	64F1	361	355	98%	304	84%	317	88%	329	91%
ANTHONY	64F2	361	363	101%	313	87%	327	91%	339	94%
HOPE	15F2	476	529	111%	402	84%	419	88%	435	91%
HOPKINS HILL	63F2	530	536	101%	515	97%	537	101%	558	105%

KENT COUNTY	22F3	530	547	103%	289	54%	301	57%	313	59%
KENT COUNTY	22F4	586	580	99%	555	95%	579	99%	601	103%
ARCTIC	49J4	452	317	70%	274	61%	285	63%	296	66%
WEST WARWICK	F1				455	71%	474	74%	493	76%
WEST WARWICK	F2				347	66%	362	68%	376	71%
WEST WARWICK	F3				309	58%	322	61%	334	63%
WEST WARWICK	F4				327	51%	341	53%	354	55%

Table 1 - Project Loads through 2020 for Feeders Post New London Ave Substation

		2016		2018		2020	
Substation	**Tranf. ID.**	**MVA**	**% SN**	**MVA**	**% SN**	**MVA**	**% SN**
ANTHONY	1	6.6	84%	6.8	88%	7.1	91%
ANTHONY	2	6.8	87%	7.1	90%	7.3	94%

Table 2 - Project Loads through 2020 for Transformers Post New London Ave Substation

Circuit	**Line Section**		**2016**		**2018**		**2020**	
	From	**To**	**MVA**	**% SE**	**MVA**	**% SE**	**MVA**	**% SE**
2230	Natick 29 Tap	Artic 49 Tap	33.6	95%	34.2	96%	34.6	98%
2230	Warwick Mall 28 Tap	Natick 29	15.3	100%	15.6	102%	15.8	103%
2232	Anthony Tap	Coventry Tap	14.8	96%	15.0	98%	15.2	99%
3310	Kent County 22	Major Potter Rd	51.6	115%	52.5	117%	53.2	119%
3310	Major Potter Rd	Hopkins Hill Riser	51.6	97%	52.5	99%	53.2	100%
3311	Kent County 22	Hopkins Hill Tap	60.8	114%	61.8	116%	62.7	118%
3311	Hopkins Hill Tap	Hopkins Hill 63	51.6	97%	52.5	99%	53.2	100%

Table 3 - Projected Contingency Loads through 2020 for Supply Line Segments Post New London Ave Substation

3.3 *Project Description*

A new 115/12.47 kV metal clad substation with 24/32/40 MVA LTC transformer and four feeder positions is proposed for New London Avenue, Warwick, RI. The station will be located adjacent to the transmission corridor between West Cranston and Drumrock substations and supplied by a 115 kV tap from an existing transmission line

Initially, four 12.47 kV feeders will be installed through approximately 2500 ft manhole and duct system, and the existing distribution system will be rearranged to offload existing transformers, supply lines and distribution feeders. The new feeders will supply load currently fed from the four 4kV Arctic substation feeders, these circuits will be

converted to 12.47 kV and the substation retired under associated project funding number C053723.

There are two sections of the 3310 and 3311 supply lines that are projected to be overloaded on contingency after the new station is in service. These lines are classified as transmission assets. The estimated cost of reconductoring approximately 5,000 ft of the 3310 line to eliminate the overloads is estimated at $650,000 and the cost of upgrading the 3311 for 120°C operation is $20,000. The alternative to the reconductoring and upgrading these lines is to remotely drop a feeder at Hopkins Hill substation on supply line contingency. It is recommended that these two circuits be upgraded.

Simulation results indicate that the addition of the New London Ave substation and 0.04 mile transmission tap would result in unacceptable attenuation of the 240 kHz power line carrier (PLC) signal. Acceptable channel performance will be achieved by installing wave traps at New London Ave, Johnston, and West Cranston substations.

Status of the Substation
The Wave Traps at Johnston and West Cranston substations were installed (C054434, C054436), the Transmission Foundations and Phase Raiser (C031696) was installed. The civil construction is 85% complete, this project required blasting due to the amount of ledge at the site.

3.4 *Benefits Summary*

Relief of the operating company's (The Narragansett Electric Company) potential distribution loading issues and improving the reliability of the distribution supply system in the Central Rhode Island West study area are the primary benefits of this project.

3.5 *Business and Customer Issues*

There are no business or customer issues other than what has been described elsewhere in this paper.

3.6 *Alternatives*

Alternative 1: Expansion of West Cranston and Kent County substations

One alternative involved the expansion of existing 115/12.47kV substations at West Cranston and Kent and Kent County substations. The supply lines would have to be rebuilt for a larger capacity to accommodate two new modular stations in West Warwick and Coventry. It would be necessary to procure sites with the appropriate zoning for each station. The distribution system would be modified to accommodate the new stations. . This option does not add any additional benefits; and the uncertainty of finding appropriate lots make this option unattractive at this time. Therefore, this alternative is not recommended.

[redacted]

Alternative 2: New 115/12.47kV substation in Cranston
A second alternative considered was the development of a new 115/12.47kV metal clad station on a site in Cranston near Phenix Avenue. The transmission costs are similar to the preferred plan, however, the distribution costs to extend feeders from this site to relive the overloaded feeders and supply lines would be significantly more due to the limited routes available and the distance from the overloaded facilities. The detail of this option were not fully developed as the estimated distribution costs far exceeded those of the preferred alternative which was near the stations with loading issues. This option is also not recommended at this time

3.7 *Safety, Environmental and Project Planning Issues*

All National Grid safety procedures will be followed at the site. This is a green field site and the majority of the work can be done before the station is energized. Clearances to live equipment must be maintained.

The equipment and fencing yard will be dimensioned to allow safe access around the yard for O&M equipment.

A secondary gate, remote from the primary yard entrance, will be provided for emergency egress from the yard.

The new Metal-Clad Switchgear Power Center (MCSPC) is designed with the switchgear in one room and the control switchboards in another to minimize personnel exposure to unsafe conditions. A door is provided between the two rooms as added protection from a fault in the switchgear area entering unimpeded into the control area.

Protective relays and controls will not be installed on the doors of the switchgear to eliminate potential personnel exposure to an arc fault condition while performing control or maintenance activities. [redacted]

3.8 *Execution Risk Appraisal*

Number	Detailed Description of Risk / Opportunity	Probability	Impact		Score		Strategy	Pre-Trigger Mitigation Plan	Residual Risk	Post Trigger Mitigation Plan
			Cost	Schedule	Cost	Schedule				
1	Contaminated or hazardous materials are found on site, which wasn't previously identified. Trained personnel are required to	2	2	2	4	4	Accept	Added temp sediment trap	0	0
3	Design was based on incorrect records that indicated conditions different than found during construction. This may result in construction delay, increased cost, and additional scope of work.	3	2	2	6	6	Mitigate	Inaccurate record of exisiting conditions		The post-trigger mitigation plan is to include the expected value of cost to the project estimate and the expected value of the schedule to the project schedule to lessen the impact of the risk to the overall project.
6	Additional pole work by that was assigned to [redacted] was either not done or done incorrectly. And additionmal OH wire required.	3	2	4	6	12	0	Additional pole work by that was assigned to [redacted] was either not done or done incorrectly. And additionmal OH wire required.	0	0
9	For the electrical portion of the work ensuring the switchgear and transformer vendors are in-line with the construction schedule.	3	2	4	6	12	Accept	The substation engineer will work closely with the suppliers	0	0
10	The electric portion of the work will be delayed if any major equipment isn't delivered on time and accountable for and minor materials have been identified for [redacted] that they are responsible for. Can lose weeks of production.	3	2	4	6	12	Mitigate	Once the contractor is awarded a meeting will take place to review the material.	0	0
11	If New London Ave delays its outages, the West Cranston outages will be delayed. West Cranston is dependent on the New London RFL Date.	4	1	2	4	8	Mitigate	Keep communication channel open with the West Cranston's PM on the outage dates. Prioritize activities that can be done to keep W. Cranston's outage date.	0	0

3.9 *Permitting*

Permit Name	Probability Required (Certain/ Likely/ Unlikely)	Duration To Acquire Permit	Status (Complete/ In Progress Not Applied For)	Estimated Completion Date
City of Warwick, Special Use Permit	Certain	6 Months	Complete	June 2015
W Warwick Curb Cut Permit	Certain	4 Months	Complete	February 2015
W Warwick Street Opening Permit	Certain	4 Months	Complete	February 2015

Building Permit (Switch Gear) City of West Warwick	Certain	3 Months	In Progress	July 2018
RI Department of Environmental Management Wetlands Permitting	Likely	9 Months	Complete	February 2016
Energy Facility Siting Board Notice Of Intent	Certain	9 Months	Complete	July 2015
Blasting Permit	Certain	2 Months	Complete	December 2017

3.10 *Investment Recovery*

3.10.1 Investment Recovery and Regulatory Implications

Based on the current schedule the substation will enter service in FY19 and the distribution Projects will be included in each fiscal year's Annual; ISR Filing until that time.

The circuit switcher and wave trap at New London Ave (CO45313) is 100% PTF.

Wave Traps at Johnston (C054436) and W Cranston substations are 100% PTF.

The Transmission line tap (C031696) is non-PTF, however assets that are part of the mainline are PTF. PTF work on the T172S consists of removing existing structure #225 and its foundation and installing new structures 225-1 approximately 65 feet back from the existing structure. Structure #225 is a davit arm suspension; Structure #225-1 will be a single pole dead-end tap structure on concrete foundation, supporting two motor operated vertical break switches. Non-PTF work on the T172s consists installing a new 3-pole dead-end structure on concrete foundations, two spans of 477 kcmil ACSR conductor. The tap will have not Shieldwire.

Work on S171S (C031696) consists of replacing structure #241 with a 20-foot taller structure to provide clearance below for the tap line. The capacity of structure #241's existing foundation is insufficient for the loads applied by the taller pole, and therefore will also need to be replaced. All work on the S171S will be PTF.

Work on the 359 consists of replacing structure #201 with a 15ft taller structure to provide clearance below for the tap line. The capacity of structure #201's foundation appears to be sufficient for the loads applied by the taller pole, however, the work with the steel pole supplier may require retrofitting the foundation with additional anchor bolts. This need will be determined during Step 2B in coordination with the steel pole supplier. All work on the 359 will be PTF.

3.10.2 Customer Impact

This project results in an indicative first full year revenue requirement when the asset is placed in service equal to approximately $3.422M. This is indicative only. The actual revenue requirement will differ, depending upon the timing of the next rate case and/or the timing of the next filing in which the project is included in rate base.

3.10.3 CIAC / Reimbursement

N/A

3.11 *Financial Impact to National Grid*

3.11.1 Cost Summary Table

Project Number	Project Title	Project Estimate Level (%)	Spend ($M)	Prior Yrs	Current Planning Horizon Yr. 1 2018/19	Yr. 2 2019/20	Yr. 3 2020/21	Yr. 4 2021/22	Yr. 5 2022/23	Yr. 6 + 2023/24	Total
C028920	New London Ave- D-Sub	Est Lvl (e.g. +/- 10%)	CapEx	5.421	4.434	0.035	0.000	0.000	0.000	0.000	9.890
			OpEx	0.027	0.100	0.000	0.000	0.000	0.000	0.000	0.127
			Removal	0.000	0.000	0.000	0.000	0.000	0.000	0.000	0.000
			Total	5.448	4.534	0.035	0.000	0.000	0.000	0.000	10.017
C028921	New London Ave- D-Line	Est Lvl (e.g. +/- 10%)	CapEx	1.893	3.330	0.110	0.000	0.000	0.000	0.000	5.333
			OpEx	0.290	0.189	0.000	0.000	0.000	0.000	0.000	0.479
			Removal	0.318	0.434	0.000	0.000	0.000	0.000	0.000	0.752
			Total	2.501	3.953	0.110	0.000	0.000	0.000	0.000	6.564
C045313	New London Ave- T-Sub	Est Lvl (e.g. +/- 10%)	CapEx	0.065	0.100	0.000	0.000	0.000	0.000	0.000	0.165
			OpEx	0.000	0.000	0.000	0.000	0.000	0.000	0.000	0.000
			Removal	0.000	0.000	0.000	0.000	0.000	0.000	0.000	0.000
			Total	0.065	0.100	0.000	0.000	0.000	0.000	0.000	0.165
C031696	New London Ave- T-Line	Est Lvl (e.g. +/- 10%)	CapEx	2.195	0.136	0.000	0.000	0.000	0.000	0.000	2.331
			OpEx	0.000	0.000	0.000	0.000	0.000	0.000	0.000	0.000
			Removal	0.064	0.000	0.000	0.000	0.000	0.000	0.000	0.064
			Total	2.259	0.136	0.000	0.000	0.000	0.000	0.000	2.395
C054434	T-Sub	New London Ave- T-Sub	CapEx	0.143	0.000	0.000	0.000	0.000	0.000	0.000	0.143
			OpEx	0.000	0.000	0.000	0.000	0.000	0.000	0.000	0.000
			Removal	0.000	0.000	0.000	0.000	0.000	0.000	0.000	0.000
			Total	0.143	0.000	0.000	0.000	0.000	0.000	0.000	0.143
C054436	T-Sub	New London Ave- T-Sub	CapEx	0.142	0.000	0.000	0.000	0.000	0.000	0.000	0.142
			OpEx	0.000	0.000	0.000	0.000	0.000	0.000	0.000	0.000
			Removal	0.000	0.000	0.000	0.000	0.000	0.000	0.000	0.000
			Total	0.142	0.000	0.000	0.000	0.000	0.000	0.000	0.142
C030161	T-Sub	3310 Reconductoring	CapEx	0.505	0.000	0.000	0.000	0.000	0.000	0.000	0.505
			OpEx	0.217	0.000	0.000	0.000	0.000	0.000	0.000	0.217
			Removal	0.015	0.000	0.000	0.000	0.000	0.000	0.000	0.015
			Total	0.737	0.000	0.000	0.000	0.000	0.000	0.000	0.737
Total Project Sanction			CapEx	10.364	8.000	0.145	0.000	0.000	0.000	0.000	18.509
			OpEx	0.534	0.289	0.000	0.000	0.000	0.000	0.000	0.823
			Removal	0.397	0.434	0.000	0.000	0.000	0.000	0.000	0.831
			Total	11.295	8.723	0.145	0.000	0.000	0.000	0.000	20.163

3.11.2 Project Budget Summary Table

Project Costs Per Business Plan- Distribution

Distribution

		Current Planning Horizon						
		Yr. 1	Yr. 2	Yr. 3	Yr. 4	Yr. 5	Yr. 6 +	
$M		2018/19	2019/20	2020/21	2021/22	2022/23	2023/24	Total
CapEx	0.000	6.416	0.100	0.000	0.000	0.000	0.000	6.516
OpEx	0.000	0.253	0.002	0.000	0.000	0.000	0.000	0.255
Removal	0.000	0.248	0.005	0.000	0.000	0.000	0.000	0.253
Total Cost in Bus. Plan	0.000	6.917	0.107	0.000	0.000	0.000	0.000	7.024

Variance (Business Plan-Project Estimate)

		Current Planning Horizon						
		Yr. 1	Yr. 2	Yr. 3	Yr. 4	Yr. 5	Yr. 6 +	
$M		2018/19	2019/20	2020/21	2021/22	2022/23	2023/24	Total
CapEx	0.000	(1.296)	(0.330)	0.000	0.000	0.000	0.000	(1.626)
OpEx	0.000	(0.071)	0.002	0.000	0.000	0.000	0.000	(0.069)
Removal	0.000	(0.186)	0.005	0.000	0.000	0.000	0.000	(0.181)
Total Cost in Bus. Plan	0.000	(1.553)	(0.323)	0.000	0.000	0.000	0.000	(1.876)

Project Costs Per Business Plan- Transmission

Transmission

		Current Planning Horizon						
		Yr. 1	Yr. 2	Yr. 3	Yr. 4	Yr. 5	Yr. 6 +	
$M		2018/19	2019/20	2020/21	2021/22	2022/23	2023/24	Total
CapEx	0.000	0.248	0.000	0.000	0.000	0.000	0.000	0.248
OpEx	0.000	0.000	0.000	0.000	0.000	0.000	0.000	0.000
Removal	0.000	0.000	0.000	0.000	0.000	0.000	0.000	0.000
Total Cost in Bus. Plan	0.000	0.248	0.000	0.000	0.000	0.000	0.000	0.248

Variance (Business Plan-Project Estimate)

		Current Planning Horizon						
		Yr. 1	Yr. 2	Yr. 3	Yr. 4	Yr. 5	Yr. 6 +	
$M		2018/19	2019/20	2020/21	2021/22	2022/23	2023/24	Total
CapEx	0.000	0.012	0.000	0.000	0.000	0.000	0.000	0.012
OpEx	0.000	0.000	0.000	0.000	0.000	0.000	0.000	0.000
Removal	0.000	0.000	0.000	0.000	0.000	0.000	0.000	0.000
Total Cost in Bus. Plan	0.000	0.012	0.000	0.000	0.000	0.000	0.000	0.012

3.11.3 Cost Assumptions

3.11.4 Net Present Value / Cost Benefit Analysis

N/A

3.11.4.1 *NPV Summary Table*

N/A

3.11.4.2 *NPV Assumptions and Calculations*

N/A

3.11.5 Additional Impacts

N/A

3.12 *Statements of Support*

3.12.1 Supporters

The supporters listed have aligned their part of the business to support the project.

Department	Individual	Responsibilities
Investment Planning	DiConza, Glen/ McColgan, Karen	Endorses relative to 5-year business plan or emergent work
Resource Planning	Marceau, Daniel/ Phillips, Mark	Endorses construction resources, cost estimate, schedule, and portfolio alignment
Asset Management/Planning	Hayduk, Brian/ Constable, Ryan	Endorses scope, estimate, and schedule with the company's goals, strategies, and objectives
Engineering and Design	Larrabee, Mark/ Hellmuth, Kevin/ Deschene, Natasha	Endorses scope, design, conformance with design standards
Project Management	Arthur, David	Endorses resources, cost estimate, schedule
Electric Project Estimation	Duffy, John	Endorses Cost Estimate

3.12.2 Reviewers

The reviewers have provided feedback on the content/language of the paper.

Function	Individual
Finance	Mackenzie-Grieve, Benjamin
	Byrne, Andrew
Regulatory	Turieo, Ed
	Artuso, Michael
Jurisdictional Delegate(s)	Anand, Sonny
	Hill, Terron
Procurment	Chevere, Diego
Control Center (CC)	Gallagher, Michael

4 Appendices

4.1 *Sanction Request Breakdown by Project*

NA

4.2 *Other Appendices*

N/A

4.3 *NPV Summary*

NA

4.4 *Customer Outreach Plan*

Task No	Due Date	Activity	Audience
1	Complete	External FAQ	External
2	Complete	External Fact Sheet	External
3	Complete	Project Map	External
4	Complete	Open House Letters	External
5	Complete	Open House Boards	External
6	Complete	Open House Training	Internal
7	Complete	Tree Clearing Abutter Letters	External

8	Complete	Property survey letters – in progress (for rock drilling)	External
9	Complete	Property survey appointments	External
10	On-going	Construction Notices for remaining phases of work	External
11	On-going	Project complete letters	External

This document has been reviewed for Critical Energy Infrastructure Information (CEII). 5/30/2014

D+T

nationalgrid

US Sanction Paper

Title:	New London Avenue Substation #150	**Sanction Paper #:**	USSC-12-472 v2
Project #:	C028920, C031696, C028921, C030161, C054764, C045313, C054434, C054436	**Sanction Type:**	Partial Sanction
Operating Company:	The Narragansett Electric Co.	**Date of Request:**	5/14/14
Author:	Marc Bristol	**Sponsor:**	Cheryl A. Warren, Vice President Asset Management
Utility Service:	Electricity T&D	**Project Manager:**	Marc Bristol

1 Executive Summary

1.1 Sanctioning Summary

This paper requests partial sanction of projects C028920, C031696, C028921, C030161, C054764, C045313, C054434, and C054436 in the amount $12.600M with a tolerance of +/- 10% for the purposes of final engineering and design, procurement of long lead materials, and initial construction activities.

This sanction amount is $12.600M broken down into:

$10.490 Capex
$0.372 Opex
$1.729 Removal

NOTE the potential investment of $18.600M with a tolerance of +/- 25%, contingent upon submittal and approval of a Project Sanction paper following completion of final engineering and design.

1.2 Project Summary

A new 115/12.47 kV metal clad substation with 24/32/40 MVA LTC transformer and four feeder positions is proposed for New London Avenue, Warwick, RI. This project will add distribution capacity in an area that is heavily loaded. The new capacity will relieve transformers, supply lines and distribution feeders that are projected to exceed their summer normal ratings.

The station will be located between West Cranston #21 and Drumrock #14 substations and supplied by a 115kV tap from the existing T-172S transmission line.

The station will be located on a purchased parcel of land adjacent to another company-owned parcel on New London Avenue.

1.3 Summary of Projects

Project Number	Project Type (Elec only)	Project Title	Estimate Amount ($M)
C028920	Distribution Substation	New London Ave Substation	6.778
C031696	Transmission Line	T172S Line Tap	2.026
C028921	Distribution Line	Distribution Getaways and 4kV Conversions	8.613
C030161	Transmission (SubT-Line)	3310 Reconductoring	0.650
C054764	Transmission (SubT-Line)	3311 Upgrades	0.059
C045313	Transmission Substation	New London Ave Circuit Switcher and Wave Trap	0.182
C054434	Transmission	W Cranston Substation- Install Wave Trap	0.150
C054436	Transmission	Johnston Substation - Install Wave Trap	0.150
		Total	18.608

1.4 Associated Projects

Project Number	Project Title	Estimate Amount ($M)
C053723	Arctic Substation Retirement (D-Sub)	0.250
	Total	0.250

1.5 Prior Sanctioning History

Date	Governance Body	Sanctioned Amount	Paper Title	Sanction Type
12/12/2012	USSC USSC-12-472	$0.770M	New London Ave Substation #150	Partial
06/30/2009	AMIC SG114	$0.00M	Strategy to Build a 115/12.5kV Substation in West Warwick, RI	Strategy
06/18/2009	AMIC PWS0922	$0.175M	A New 115/12.5kV Substation in West Warwick RI	Partial
10/01/2008	DCIG DCIG1008P92	$0.365M	West Warwick Substation – Install Metal Clad Switchgear With Four Distribution Feeders and Rebuild the 3310 and 3311 Sub-Transmission Lines	Partial

1.6 Next Planned Sanction Review

Date (Month/Year)	Purpose of Sanction Review
July 2015	Full implementation

REDACTED

1.7 Category

Category	Reference to Mandate, Policy, or NPV Assumptions
O Mandatory ⊙ Policy- Driven O Justified NPV	The investment has been classified as policy driven. Without this project the company will not be able to provide a reliable electric service to the customers in the study area.

1.8 Asset Management Risk Score

Asset Management Risk Score: 39

Primary Risk Score Driver: (Policy Driven Projects Only)

⊙ Reliability O Environment O Health & Safety O Not Policy Driven

1.9 Complexity Level

⊙ High Complexity O Medium Complexity O Low Complexity O N/A

Complexity Score: 29

1.10 Process Hazard Assessment

A Process Hazard Assessment (PHA) is required for this project:

⊙ Yes O No

1.11 Business Plan

Business Plan Name & Period	Project included in approved Business Plan?	Over / Under Business Plan	Project Cost relative to approved Business Plan ($)
New England Distribution FY15-FY19 C028920, C028921,	◉ Yes ○ No	◉ Over ○ Under ○ NA	$9.300M
New England Transmission FY15-FY19 C031696, C045313, C054434, C054436, C030161, C054764	◉ Yes ○ No	◉ Over ○ Under ○ NA	$1.830M

1.12 If cost > approved Business Plan how will this be funded?

Re-allocation of funds within the portfolio will be managed by Resource Planning to meet jurisdictional budgetary, statutory and regulatory requirements.

1.13 Current Planning Horizon

		Current Planning Horizon						
		Yr. 1	Yr. 2	Yr. 3	Yr. 4	Yr. 5	Yr. 6 +	
$M	Prior Yrs	2014/15	2015/16	2016/17	2017/18	2018/19	2019/20	Total
CapEx	0.679	2.443	6.301	7.002	0.000	0.000	0.000	16.425
OpEx	0.019	0.063	0.244	0.085	0.000	0.000	0.000	0.411
Removal	0.002	0.273	1.100	0.397	0.000	0.000	0.000	1.772
CIAC/Reimbursement	0.000	0.000	0.000	0.000	0.000	0.000	0.000	0.000
Total	0.700	2.779	7.645	7.484	0.000	0.000	0.000	18.608

1.14 Key Milestones

Milestone	Target Date: (Month/Year)
Start Preliminary Engineering (kick-off meeting)	May 2009
Partial Sanction	May 2014
Distribution Line Design Complete – EDC	July 2014
Distribution Line Construction Start	December 2014
Substation Engineering Design Complete – EDC	May 2015
Project Sanction	August 2015
Substation Construction Start	October 2015
Submit Facility Ratings to ISO	July 2016
Substation Construction Complete – CC	November 2016
Ready for Load - RFL	November 2016
Distribution Line Construction Complete – CC	December 2016
Project Closure Report	February 2017

1.15 Resources, Operations and Procurement

Resource Sourcing			
Engineering & Design Resources to be provided	☑ Internal	☑ Contractor	
Construction/Implementation Resources to be provided	☑ Internal	☑ Contractor	
Resource Delivery			
Availability of internal resources to deliver project:	○ Red	○ Amber	◉ Green
Availability of external resources to deliver project:	○ Red	○ Amber	◉ Green
Operational Impact			
Outage impact on network system:	○ Red	○ Amber	◉ Green
Procurement Impact			
Procurement impact on network system:	○ Red	○ Amber	◉ Green

1.16 Key Issues (include mitigation of Red or Amber Resources)

1	Special use permit from the City of Warwick required
2	Outage required on the T172S for new 115kV tap; summer outage should be avoided
3	Historical raw material found on site, additional site exploration required for characterization

1.17 Climate Change

Contribution to National Grid's 2050 80% emissions reduction target:	⊙ Neutral	O Positive	O Negative
Impact on adaptability of network for future climate change:	⊙ Neutral	O Positive	O Negative

1.18 List References

1	USSC-12-472 – New London Ave Substation #150 December 2012
2	SG114 - Strategy to Build a 115/12.5kV Substation in West Warwick, RI June 2009
3	PWS0922 - A New 115/12.5kV Substation in West Warwick RI June 2009
4	DCIG1008P92 – West Warwick Substation – Install Metal Clad Switchgear With Four Distribution Feeders and Rebuild the 3310 and 3311 Sub-Transmission Lines May 2009

2 *Decisions*

The US Sanctioning Committee (USSC) at a meeting held on May 14, 2014:

(a) APPROVED the investment of $12.600M and a tolerance of +/- 10% for final engineering and design, procurement of long lead materials, and initial construction activities.

(b) NOTED the potential investment $18.600M to and a tolerance of +/- 25%, contingent upon submittal and approval of a Project Sanction paper following completion of final engineering and design.

(c) NOTED that Marc Bristol has the approved financial delegation to undertake the activities stated in (a).

Signature.....Date.....5/27/14

Lee S. Eckert
US Chief Financial Officer
Chairman, US Sanctioning Committee

3 Sanction Paper Detail

Title:	New London Avenue Substation #150	**Sanction Paper #:**	USSC-12-472 v2
Project #:	C028920, C031696, C028921, C030161, C054764, C045313, C054434, C054436	**Sanction Type:**	Partial Sanction
Operating Company:	The Narragansett Electric Co.	**Date of Request:**	5/14/14
Author:	Marc Bristol	**Sponsor:**	Cheryl A. Warren
Utility Service:	Electricity T&D	**Project Manager:**	Marc Bristol

3.1 Background

The Central Rhode Island West study area encompasses the Towns of Coventry, West Greenwich, and West Warwick and sections of the Cities of Cranston and Warwick, and Towns of East Greenwich, Exeter, and Scituate. The area load peaked at approximately 169 MVA in 2012 with 47,000 customers served. The study area and existing area substations are shown in Figure 1 of the appendix.

In 2008 a comprehensive study was completed for this area. This study identified an immediate need for new distribution capacity in the area to resolve short-term loading concerns and a new substation in the Warwick/West Warwick area to resolve long-term loading concerns and significant exposure for various n-1 contingencies. The 2012 Annual Capacity Plan still supports the need for a new substation in this area.

The Central Rhode Island West study area is still supplied by a highly utilized supply and distribution system. It is becoming increasingly challenging to operate this system within normal loading limits and to supply load growth in this area. This strategy paper documents the long-term solution for the area.

3.2 Drivers

The primary driver is projected thermal overloads of transformers, distribution feeders and supply lines during period of system peak loading. There have been a number of large developments in the area [redacted] that continue to add load to an area with heavily loaded feeders and supply lines. A new modular feeder along with load transfers have been utilized to prevent thermal overloads as a result of the new load.

The tables below show the facilities in the study area that are projected to exceed 100% of their rating during either normal operation or contingencies. Table 1 below shows feeders in the area with loads projected to exceed 100% of their normal rating; Table 2 shows transformers with loads projected to exceed 100% of their normal rating; and Table 3 shows the supply lines that are overloaded during contingencies.

Substation	Feeder	SN Rating (Amps)	2014		2016		2018		2020	
			Amps	%SN	Amps	%SN	Amps	%SN	Amps	%SN
ANTHONY	64F1	361	336	93%	353	98%	359	99%	363	101%
ANTHONY	64F2	361	344	95%	361	100%	367	102%	372	103%
HOPE	15F2	476	465	98%	487	102%	496	104%	502	105%
HOPKINS HILL	63F2	530	512	97%	537	101%	546	103%	553	104%
KENT COUNTY	22F3	530	487	92%	511	96%	520	98%	527	99%
KENT COUNTY	22F4	586	579	99%	607	104%	618	105%	626	107%
ARCTIC	49J4	295	294	100%	308	104%	313	106%	317	108%

Table 1 - Projected loads through 2020 for feeders and loads greater than 100%

Substation	Transformer	2014		2016		2018		2020	
		MVA	% SN	MVA	% SN	MVA	% SN	MVA	% SN
ANTHONY	1	7.3	93%	7.6	98%	7.7	99%	7.8	101%
ANTHONY	2	7.4	95%	7.8	100%	7.9	102%	8.0	103%

Table 2 - Projected Loads through 2020 for Transformers with Loads Greater than 100%

Circuit	Line Section		2014		2016		2018		2020	
	From	To	MVA	% SE	MVA	% SE	MVA	% SE	MVA	% SE
2230	Natick 29 Tap	Artic 49 Tap	37.5	106%	39.3	111%	40.0	113%	40.5	114%
2230	Warwick Mall 28 Tap	Natick 29	16.1	105%	16.9	110%	17.2	112%	17.4	113%
2232	Anthony Tap	Coventry Tap	16.0	104%	16.8	110%	17.1	112%	17.3	113%
3310	Kent County 22	Major Potter Rd	53.2	119%	55.8	124%	56.7	127%	57.5	128%
3310	Major Potter Rd	Hopkins Hill Riser	53.2	100%	55.8	105%	56.7	107%	57.5	108%
3311	Kent County 22	Hopkins Hill Tap	61.9	116%	64.9	122%	66.0	124%	66.9	126%
3311	Hopkins Hill Tap	Hopkins Hill 63	53.2	100%	55.8	105%	56.7	107%	57.5	108%

Table 3 - Projected Contingency Loads through 2020 for Supply Line Segments with Loads Greater than 100%

The tables below show projected loading after the New London Ave substation is placed in service. Table 4 below shows projected feeder loading; Table 5 below shows projected transformer loading; and Table 6 below shows projected supply line loading post an n-1 contingency.

Substation	Feeder	SN Rating (Amps)	2014 Amps	2014 %SN	2016 Amps	2016 %SN	2018 Amps	2018 %SN	2020 Amps	2020 %SN
ANTHONY	64F1	361	355	98%	304	84%	317	88%	329	91%
ANTHONY	64F2	361	363	101%	313	87%	327	91%	339	94%
HOPE	15F2	476	529	111%	402	84%	419	88%	435	91%
HOPKINS HILL	63F2	530	536	101%	515	97%	537	101%	558	105%
KENT COUNTY	22F3	530	547	103%	289	54%	301	57%	313	59%
KENT COUNTY	22F4	586	580	99%	555	95%	579	99%	601	103%
ARCTIC	49J4	452	317	70%	274	61%	285	63%	296	66%
WEST WARWICK	F1				455	71%	474	74%	493	76%
WEST WARWICK	F2				347	66%	362	68%	376	71%
WEST WARWICK	F3				309	58%	322	61%	334	63%
WEST WARWICK	F4				327	51%	341	53%	354	55%

Table 4 - Project Loads through 2020 for Feeders Post New London Ave Substation

Substation	Tranf. ID.	2016 MVA	2016 % SN	2018 MVA	2018 % SN	2020 MVA	2020 % SN
ANTHONY	1	6.6	84%	6.8	88%	7.1	91%
ANTHONY	2	6.8	87%	7.1	90%	7.3	94%

Table 5 - Project Loads through 2020 for Transformers Post New London Ave Substation

Circuit	Line Section From	Line Section To	2016 MVA	2016 % SE	2018 MVA	2018 % SE	2020 MVA	2020 % SE
2230	Natick 29 Tap	Artic 49 Tap	33.6	95%	34.2	96%	34.6	98%
2230	Warwick Mall 28 Tap	Natick 29	15.3	100%	15.6	102%	15.8	103%
2232	Anthony Tap	Coventry Tap	14.8	96%	15.0	98%	15.2	99%
3310	Kent County 22	Major Potter Rd	51.6	115%	52.5	117%	53.2	119%
3310	Major Potter Rd	Hopkins Hill Riser	51.6	97%	52.5	99%	53.2	100%
3311	Kent County 22	Hopkins Hill Tap	60.8	114%	61.8	116%	62.7	118%
3311	Hopkins Hill Tap	Hopkins Hill 63	51.6	97%	52.5	99%	53.2	100%

Table 6 - Projected Contingency Loads through 2020 for Supply Line Segments Post New London Ave Substation

3.3 Project Description

A new 115/12.47 kV metal clad substation with 24/32/40 MVA LTC transformer and four feeder positions is proposed for New London Avenue, Warwick, RI. The station will be located adjacent to the transmission corridor between West Cranston and Drumrock substations and supplied by a 115 kV tap from an existing transmission line. The proposed geographical location of the proposed new substation is shown in Figure 2, and proposed one line shown in Figure 3 of the appendix.

Initially, four 12.47 kV feeders will be installed through approximately 2500 ft manhole and duct system, and the existing distribution system will be rearranged to offload existing transformers, supply lines and distribution feeders. The new feeders will supply load currently fed from the four 4kV Arctic substation feeders, these circuits will be converted to 12.47 kV and the substation retired under associated project funding number C053723.

The layout of the 12.47 kV distribution feeders, after installation of the substation is shown in Figure 5 of the appendix.

There are two sections of the 3310 and 3311 supply lines that are projected to be overloaded on contingency after the new station is in service. These lines are classified as transmission assets. The estimated cost of reconductoring approximately 5,000 ft of the 3310 line to eliminate the overloads is estimated at $650,000 and the cost of upgrading the 3311 for 120°C operation is $20,000. The alternative to the reconductoring and upgrading these lines is to remotely drop a feeder at Hopkins Hill substation on supply line contingency. It is recommended that these two circuits be upgraded.

Simulation results indicate that the addition of the New London Ave substation and 0.04 mile transmission tap would result in unacceptable attenuation of the 240 kHz power line carrier (PLC) signal. Acceptable channel performance will be achieved by installing wave traps at New London Ave, Johnston, and West Cranston substations.

3.4 Benefits Summary

Relief of the customer's (Narragansett Electric Company) potential distribution loading issues and improving the reliability of the distribution supply system in the Central Rhode Island West area are the primary benefits of this project.

3.5 Business and Customer Issues

The land purchase was completed as of August 28, 2013.

3.6 Alternatives

Alternative 1: Expansion of West Cranston and Kent County substations

One alternative involved the expansion of existing 115/12.47kV substations at West Cranston and Kent and Kent County substations. The supply lines would have to be rebuilt for a larger capacity to accommodate two new modular stations in West Warwick and Coventry. It will be necessary to procure sites with the appropriate zoning for each station. The distribution system

will be modified to accommodate the new stations. The estimated distribution cost of this option is $11,300,000. There will be an additional $3,800,000 in associated transmission costs. This option exceeded the cost of the preferred option; there are no additional benefits; and the uncertainty of finding appropriate lots make this option unattractive at this time.

Alternative 2: New 115/12.47kV substation in Cranston

A second alternative considered was the development of a new 115/12.47kV metal clad station on a site in Cranston near Phenix Avenue. The transmission costs are similar to the preferred plan, however, the distribution costs to extend feeders from this site to relive the overloaded feeders and supply lines would be significantly more due to the limited routes available and the distance from the overloaded facilities. The detail of this option were not fully developed as the estimated distribution costs far exceeded those of the preferred alternative which was near the stations with loading issues. This option is also not recommended at this time.

3.7 Safety, Environmental and Project Planning Issues

Safety

All National Grid safety procedures will be followed at the site. This is a green field site and the majority of the work can be done before the station is energized. Clearances to live equipment must be maintained.

The equipment and fencing yard will be dimensioned to allow safe access around the yard for O&M equipment.

A secondary gate, remote from the primary yard entrance, will be provided for emergency egress from the yard.

The new Metal-Clad Switchgear Power Center (MCSPC) is designed with the switchgear in one room and the control switchboards in another to minimize personnel exposure to unsafe conditions. A door is provided between the two rooms as added protection from a fault in the switchgear area entering unimpeded into the control area.

Protective relays and controls will not be installed on the doors of the switchgear to eliminate potential personnel exposure to an arc fault condition while performing control or maintenance activities.

Environmental

As part of the due diligence process, a Phase 1 Environmental Site Assessment (ESA) was conducted with no Recognizable Environmental Conditions (RECs) found.

An Archaeological site review identified historical raw materials within the bounds of the proposed substation. A Phase 2 Archaeological site evaluation will be performed for characterization.

A Storm Water Pollution Prevention Plan (SWPPP) will be required.

The land parcel has several wetlands. It is likely that the Rhode Island Department of Environmental Management (RIDEM) freshwater wetlands permitting will be required.

A Soil Erosion and Sediment Control Plan may be required by the City of Warwick.

Planning

A special use permit will be required to use the property for a substation. As part of that permit, requirements for fencing, driveways, landscape and screening, and setbacks must be met, or variances applied for and obtained.

The level of Stakeholder Management involvement is high as a result of proximity to abutters. The team will meet with the City of Warwick and abutters after site plans are finalized. The site design shall attempt to maintain natural screening to the residential abutters and landscaping will be provided to enhance the natural screening.
A noise study is being performed using the assumptions of 67 dBA NEMA low noise or 65 dBA very low noise to limit noise increases at nearby residences to 5 dBA or less.

3.8 Execution Risk Appraisal

Number	Detailed Description of Risk / Opportunity	Probability	Impact		Score		Strategy	Pre-Trigger Mitigation Plan	Residual Risk	Post Trigger Mitigation Plan
			Cost	Schedule	Cost	Schedule				
1	Wetlands mitigation required by agencies may be greater than anticipated	3	2	4	6	12	Accept	Begin permitting process as early as possible to quantify risk and develop mitigation plans and designs	N/A	Address with offsets
2	Data recovery may be required for historical raw material found on site	4	2	3	8	12	Accept	Perform Phase 2 Archaeological site evaluation for characterization	N/A	Perfrom Data Recovery of material
3	Abutters views of substation, T-line construction could cause delays	3	2	1	6	3	Accept	Initiate outreach plan early	N/A	Address identified abutter issues with potential solutions early
4	Subsurface conditions may include rock and/or ledge	4	2	2	8	8	Accept	Conduct geotechnical studies	N/A	Final engineering design to address and mitigate risk
5	Critical material delivery delays	2	2	2	4	4	Mitigate	Start bid process early, obtain multiple bids	N/A	Work with vendor to avoid schedule impacts and/or revise construction activities sequence
6	Civil work for construction of substation entrance in close proximity of 345kV circuit; crews could inadvertently make contact with conductor causing circuit outage or property damage	3	2	2	6	6	Mitigate	Develop PHA	N/A	Revise PHA

3.9 Permitting

Permit Name	Probability Required (Certain/ Likely/ Unlikely)	Duration To Acquire Permit	Status (Complete/ In Progress Not Applied For)	Estimated Completion Date
Warwick, RI, Special Use Permit	Certain	4 Months	Not Applied For	January 2015
Warwick, RI, Curb Cut Permit	Certain	3 Months	Not Applied For	February 2015
Warwick, RI, Street Opening Permit	Certain	3 Months	Not Applied For	February 2015
Building Permit	Certain	3 Months	Not Applied For	January 2015
RIDEM Wetlands Permitting	Likely	9 Months	Not Applied For	February 2015
EFSB Notice of Intent	Certain	4 Months	Not Applied For	May 2015

3.10 Investment Recovery

3.10.1 Investment Recovery and Regulatory Implications

Based on current schedule the substation will enter service in FY17 and the distribution projects will be included in each fiscal year's Annual ISR Filing until that time.

The circuit switcher and wave trap at New London Ave (C045313) is 100% PTF.

Wave traps at Johnston (C054436) and W Cranston substations are 100% PTF.

The transmission line tap (C031696) is non-PTF, however assets that are part of the mainline are PTF. PTF work on the T172S consists of removing existing structure #225 and its foundation, and installing new structure 225-1 approximately 65 feet back from the existing structure. Structure #225 is a davit arm suspension; Structure #225-1 will be a single pole deadend tap structure on concrete foundation, supporting two motor operated vertical break switches. Non-PTF work on the T172S consists of installing a new 3-pole deadend structure on concrete foundations, and two spans of 477 kcmil ACSR conductor. The tap line will have no Shieldwire.

Work on S171S (C031696) consists of replacing structure #241 with a 20-foot taller structure to provide clearance below for the tap line. The capacity of structure #241's existing foundation is insufficient for the loads applied by the taller pole, and therefore will also need to be replaced. All work on S171S will be PTF.

Work on 359 consists of replacing structure #201 with a 15-foot taller structure to provide clearance below for the tap line. The capacity of structure #201's foundation appears to be sufficient for the loads applied by the taller pole, however, work with the steel pole supplier may

require retrofitting the foundation with additional anchor bolts. This need will be determined during step 2B in coordination with the steel pole supplier. All work on 359 will be PTF.

Work on 332 consists of installing phaseraisers at structures #198 and #199 to provide clearance below for the tap line. Structure #198 will be raised five feet, and structure #199 will be raised 15 feet. All work on 332 will be PTF.

3.10.2 Customer Impact

This project results in an indicative first full year revenue requirement when the asset is placed in service equal to approximately $3.285M. This is indicative only. The actual revenue requirement will differ, depending upon the timing of the next rate case and/or the timing of the next filing in which the project is included in rate base.

3.10.3 CIAC / Reimbursement

N/A

3.11 Financial Impact to National Grid

3.11.1 Cost Summary Table

Project Number	Project Title	Project Estimate Level (%)	Spend ($M)	Prior Yrs	Current Planning Horizon Yr. 1 2014/15	Yr. 2 2015/16	Yr. 3 2016/17	Yr. 4 2017/18	Yr. 5 2018/19	Yr. 6+ 2019/20	Total
C028920	New London Ave Substation	+/- 25%	CapEx	0.399	1.050	2.532	2.750	0.000	0.000	0.000	6.731
			OpEx	0.018	0.009	0.010	0.010	0.000	0.000	0.000	0.047
			Removal	0.000	0.000	0.000	0.000	0.000	0.000	0.000	0.000
			Total	0.417	1.059	2.542	2.760	0.000	0.000	0.000	6.778
C031696	T172S Line Tap	+/- 25%	CapEx	0.148	0.070	0.350	1.404	0.000	0.000	0.000	1.972
			OpEx	0.001	0.000	0.000	0.010	0.000	0.000	0.000	0.011
			Removal	0.000	0.000	0.000	0.043	0.000	0.000	0.000	0.043
			Total	0.149	0.070	0.350	1.457	0.000	0.000	0.000	2.026
C028921	Distribution Getaways and 4kV Conversions	+/- 25%	CapEx	0.010	0.800	3.300	2.500	0.000	0.000	0.000	6.610
			OpEx	0.000	0.050	0.234	0.065	0.000	0.000	0.000	0.349
			Removal	0.000	0.200	1.100	0.354	0.000	0.000	0.000	1.654
			Total	0.010	1.050	4.634	2.919	0.000	0.000	0.000	8.613
C030161	3310 Reconductoring	+/- 25%	CapEx	0.122	0.456	0.000	0.000	0.000	0.000	0.000	0.578
			OpEx	0.000	0.002	0.000	0.000	0.000	0.000	0.000	0.002
			Removal	0.002	0.068	0.000	0.000	0.000	0.000	0.000	0.070
			Total	0.124	0.526	0.000	0.000	0.000	0.000	0.000	0.650
C054764	3311 Upgrades	+/- 25%	CapEx	0.000	0.052	0.000	0.000	0.000	0.000	0.000	0.052
			OpEx	0.000	0.002	0.000	0.000	0.000	0.000	0.000	0.002
			Removal	0.000	0.005	0.000	0.000	0.000	0.000	0.000	0.005
			Total	0.000	0.000	0.000	0.000	0.000	0.000	0.000	0.059
C045313	New London Ave Circuit Switcher and Wave Trap	+/- 25%	CapEx	0.000	0.005	0.089	0.088	0.000	0.000	0.000	0.182
			OpEx	0.000	0.000	0.000	0.000	0.000	0.000	0.000	0.000
			Removal	0.000	0.000	0.000	0.000	0.000	0.000	0.000	0.000
			Total	0.000	0.005	0.089	0.088	0.000	0.000	0.000	0.182
C054434	W Cranston Substation- Install Wave Trap	+/- 25%	CapEx	0.000	0.005	0.015	0.130	0.000	0.000	0.000	0.150
			OpEx	0.000	0.000	0.000	0.000	0.000	0.000	0.000	0.000
			Removal	0.000	0.000	0.000	0.000	0.000	0.000	0.000	0.000
			Total	0.000	0.005	0.015	0.130	0.000	0.000	0.000	0.150
C054436	Johnston Substation - Install Wave Trap	+/- 25%	CapEx	0.000	0.005	0.015	0.130	0.000	0.000	0.150	0.300
			OpEx	0.000	0.000	0.000	0.000	0.000	0.000	0.000	0.000
			Removal	0.000	0.000	0.000	0.000	0.000	0.000	0.000	0.000
			Total	0.000	0.005	0.015	0.130	0.000	0.000	0.150	0.300
Total Project Sanction			CapEx	0.679	2.443	6.301	7.002	0.000	0.000	0.000	16.425
			OpEx	0.019	0.063	0.244	0.085	0.000	0.000	0.000	0.411
			Removal	0.002	0.273	1.100	0.397	0.000	0.000	0.000	1.772
			Total	0.700	2.779	7.645	7.484	0.000	0.000	0.000	18.608

It is expected that the plant will be capitalized at the ready for load date, unless otherwise specified.

3.11.2 Project Budget Summary Table

Project Costs Per Business Plan (Transmission)

		Current Planning Horizon						
$M	Prior Yrs (Actual)	Yr. 1 2014/15	Yr. 2 2015/16	Yr. 3 2016/17	Yr. 4 2017/18	Yr. 5 2018/19	Yr. 6 + 2019/20	Total
CapEx	0.270	0.560	0.450	0.000				1.280
OpEx	0.001	0.020	0.000	0.000				0.021
Removal	0.002	0.020	0.000	0.000				0.022
Total Cost in Bus. Plan	0.273	0.600	0.450	0.000				1.323

Variance (Business Plan-Project Estimate)

		Current Planning Horizon						
$M	Prior Yrs (Actual)	Yr. 1 2014/15	Yr. 2 2015/16	Yr. 3 2016/17	Yr. 4 2017/18	Yr. 5 2018/19	Yr. 6 + 2019/20	Total
CapEx	0.000	0.029	(0.149)	(0.788)				(0.908)
OpEx	0.000	0.018	(0.010)	(0.010)				(0.002)
Removal	0.000	(0.048)	(0.070)	(0.030)				(0.148)
Total Cost in Bus. Plan	0.000	(0.001)	(0.229)	(0.828)				(1.058)

Project Costs Per Business Plan (Distribution)

		Current Planning Horizon						
$M	Prior Yrs (Actual)	Yr. 1 2014/15	Yr. 2 2015/16	Yr. 3 2016/17	Yr. 4 2017/18	Yr. 5 2018/19	Yr. 6 + 2019/20	Total
CapEx	0.409	2.300	2.600	0.200	0.000	0.000	0.000	5.509
OpEx	0.018	0.101	0.134	0.014	0.000	0.000	0.000	0.267
Removal	0.000	0.102	0.188	0.028	0.000	0.000	0.000	0.318
Total Cost in Bus. Plan	0.427	2.503	2.922	0.242	0.000	0.000	0.000	6.094

Variance (Business Plan-Project Estimate)

		Current Planning Horizon						
$M	Prior Yrs (Actual)	Yr. 1 2014/15	Yr. 2 2015/16	Yr. 3 2016/17	Yr. 4 2017/18	Yr. 5 2018/19	Yr. 6 + 2019/20	Total
CapEx	0.000	0.450	(3.232)	(5.050)	0.000	0.000	0.000	(7.832)
OpEx	0.000	0.042	(0.110)	(0.061)	0.000	0.000	0.000	(0.129)
Removal	0.000	(0.098)	(0.912)	(0.326)	0.000	0.000	0.000	(1.336)
Total Cost in Bus. Plan	0.000	0.394	(4.254)	(5.437)	0.000	0.000	0.000	(9.297)

3.11.3 Cost Assumptions

These cost estimates are based on planning grade (+/- 25%). Project sanction cost estimates will be developed after final design is completed.

3.11.4 Net Present Value / Cost Benefit Analysis

3.11.4.1 NPV Summary Table

This is not an NPV project.

3.11.4.2 NPV Assumptions and Calculations

This is not an NPV project.

3.11.5 Additional Impacts

N/A

3.12 Statements of Support

3.12.1 Supporters

The supporters listed have aligned their part of the business to support the project.

Department	Individual	Responsibilities
Investment Planning	Glen DiConza	Endorses relative to distribution 5-year business plan or emergent work
Investment Planning	Michelle Park	Endorses relative to transmission 5-year business plan or emergent work
Resource Planning	Jim Patterson	Endorses D-Line resources, cost, estimate, schedule and Portfolio alignment
Resource Planning	Mark Phillips	Endorses D-Sub and T-Sub resources, cost, estimate, schedule and Portfolio alignment
Engineering / Design	John Gavin	Endorses substation scope, design, conformance with design standards
Engineering / Design	Mark Browne	Endorses transmission line scope, design, conformance with design standards
Engineering / Design	Len Swanson	Endorses substation scope, design, conformance with design standards

Engineering / Design	Alan Labarre	Endorses scope, estimate, and schedule with the company's goals, strategies, and objectives
Engineering / Design	Carol Sedewitz	Endorses scope, estimate, and schedule with the company's goals, strategies, and objectives
Project Management	Tim Moore	Endorses Resources, cost estimate, schedule

3.12.2 Reviewers

The reviewers have provided feedback on the content/language of the paper.

Function	Individual
Finance	Keith Fowler
Regulatory	Peter Zschokke
Jurisdictional Delegates	Jennifer Grimsley / Nabil Hitti
Procurement	Art Curran
Control Center	Michael Gallagher
Control Center	Will Houston

4 Appendices

4.1 Sanction Request Breakdown by Project

$M	C028920	C031696	C028921	C030161	C054764	C045313	C054434	C054436	Total
CapEx	2.525	0.425	6.610	0.578	0.052	0.100	0.100	0.100	10.490
OpEx	0.018	0.001	0.349	0.002	0.002	0.000	0.000	0.000	0.372
Removal	0.000	0.000	1.654	0.070	0.005	0.000	0.000	0.000	1.729
Total	2.543	0.426	8.613	0.650	0.059	0.100	0.100	0.100	12.591

4.2 Other Appendices

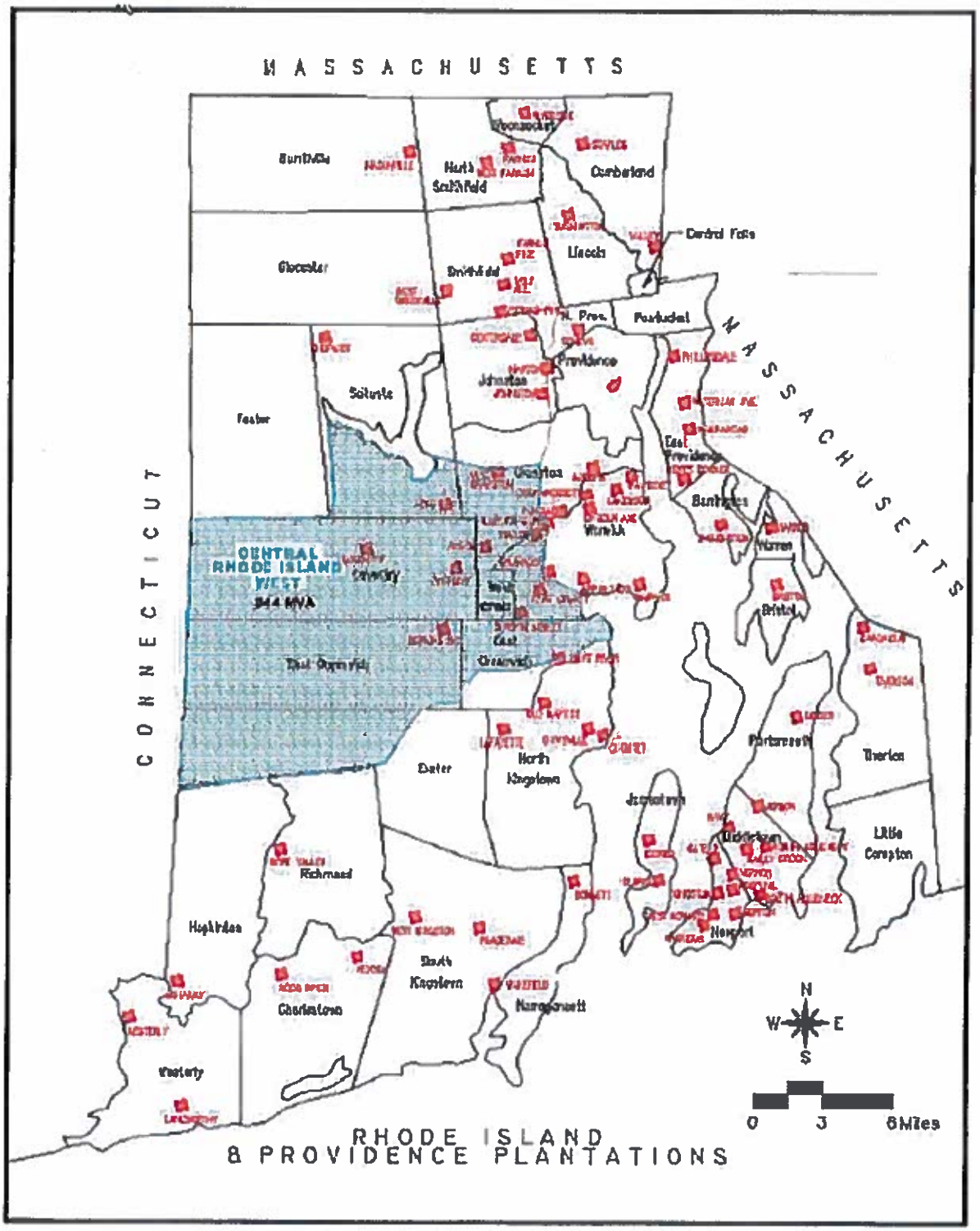

Figure 1 - Central Rhode Island West Study Area



Figure 2 - Geographic Location of New London Ave Substation

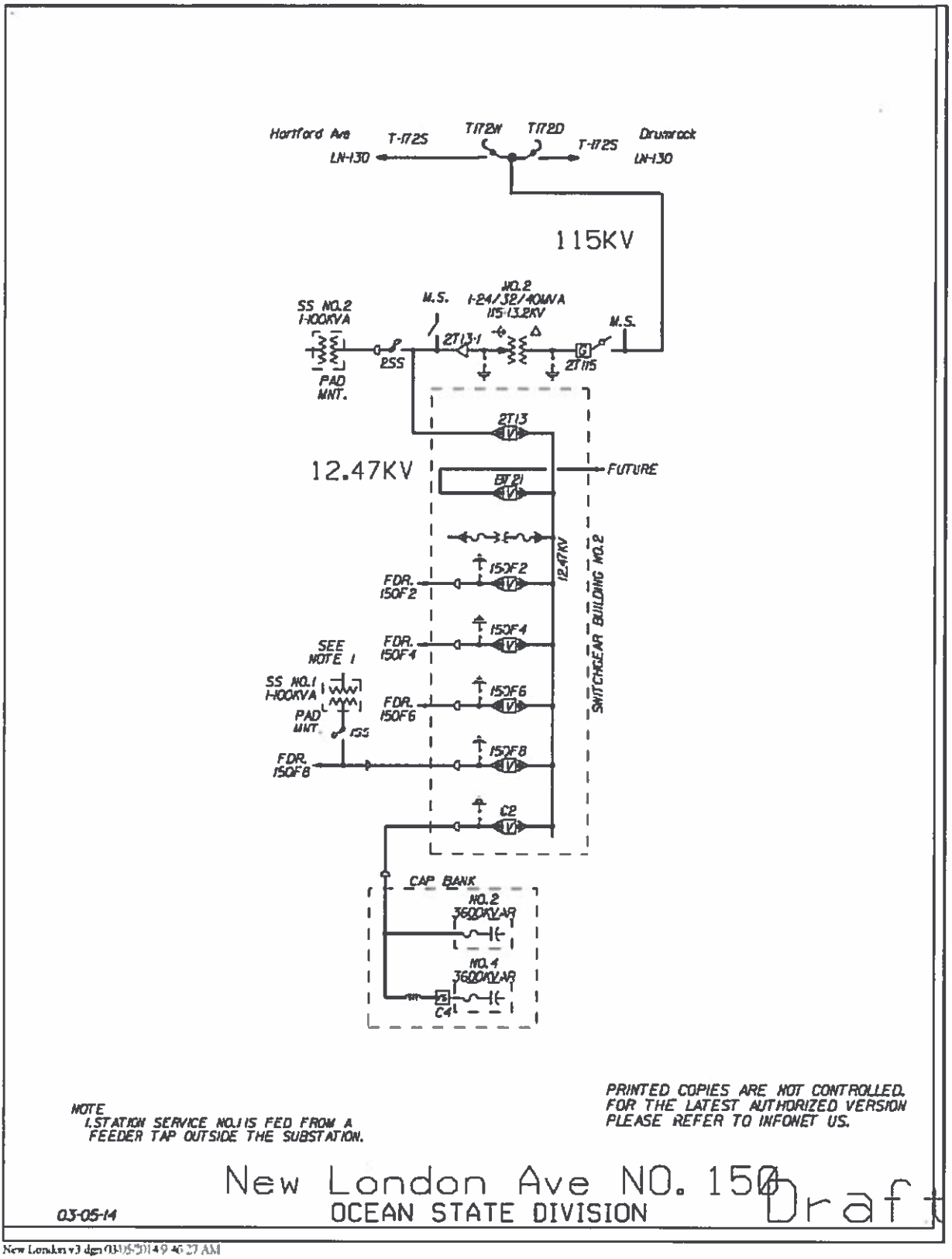

Figure 3 - New London Ave Proposed One Line

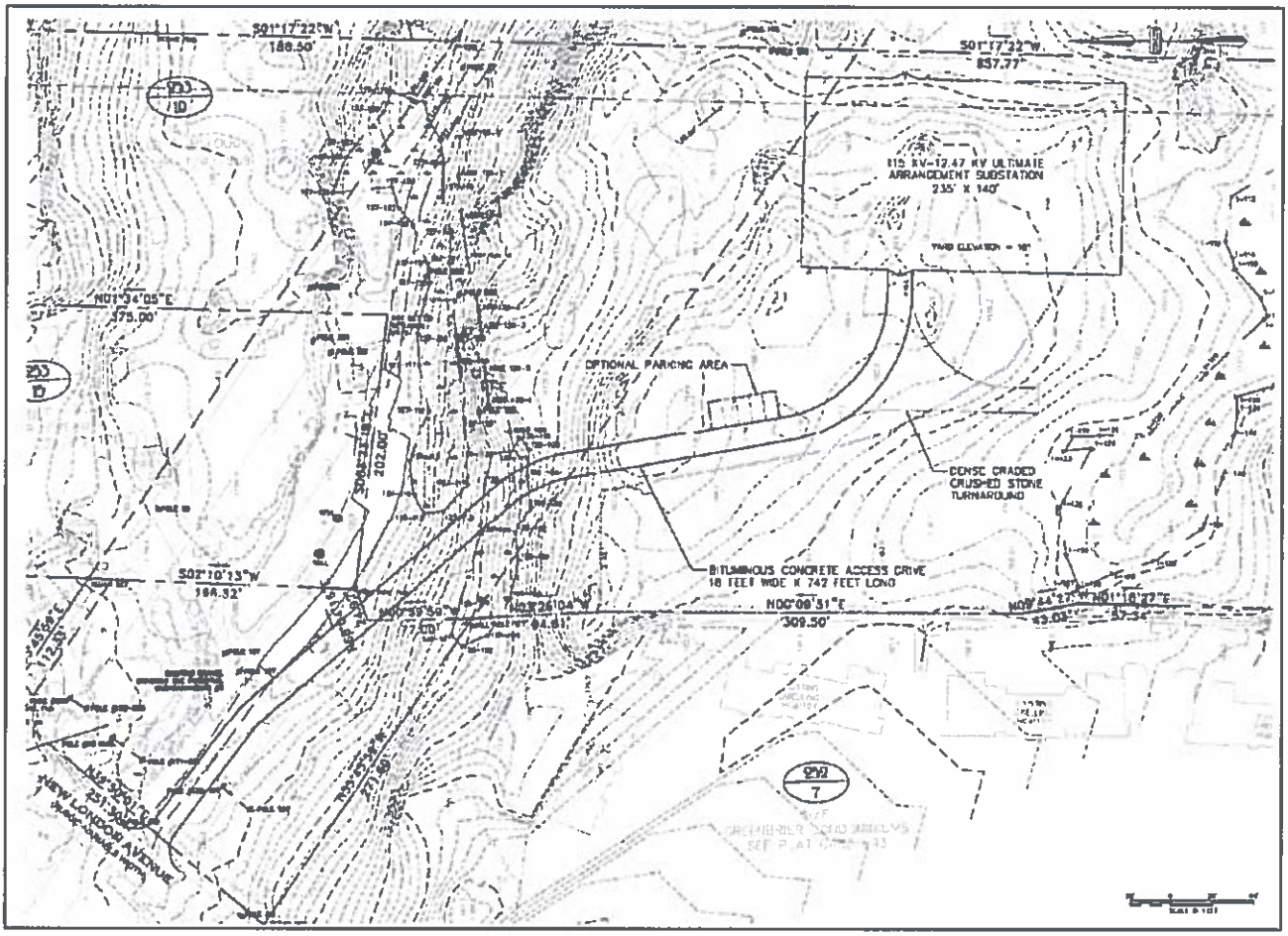

Figure 4 - New London Ave Substation Site Layout

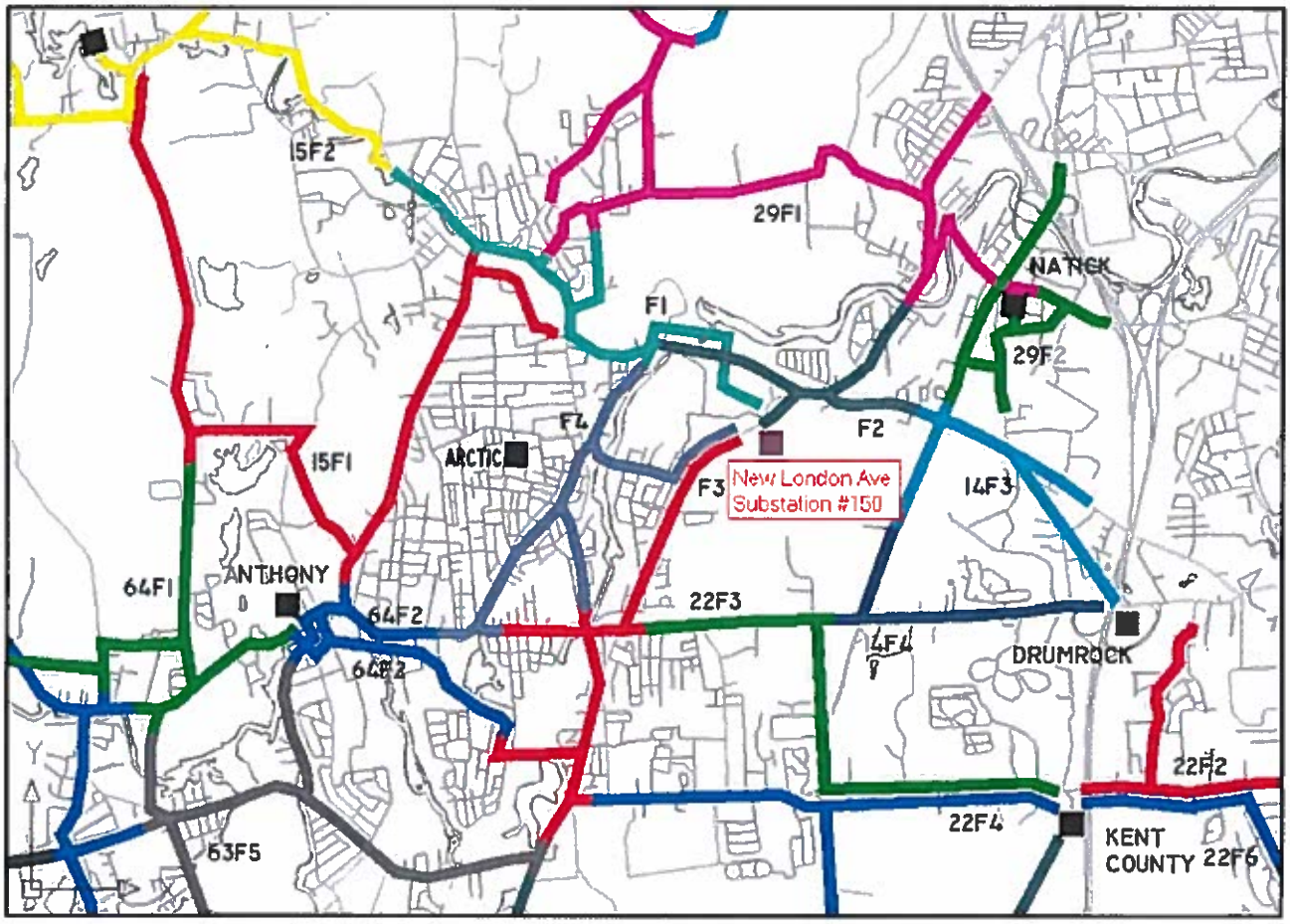

Figure 5 – Proposed 12.47kV Distribution Mainline Feeders

This document has been reviewed for Critical Energy Infrastructure Information (CEII). 1/10/2013

T + D

nationalgrid

US Sanction Paper

Title:	New London Avenue Substation #150	**Sanction Paper #:**	USSC-12-472
Project #:	See below summary of projects	**Sanction Type:**	Partial Sanction
Operating Company:	Narragansett Electric	**Date of Request:**	12/12/2012
Author:	Bob Duero (Parsons)/Tim Moore	**Sponsor:**	Cheryl A. Warren
Utility Service:	Electricity T&D	**Project Manager:**	Bob Duero (Parsons)/Tim Moore

1 Executive Summary

1.1 *Sanctioning Summary:*

This paper requests a partial sanction of projects C31696, C28920, C28921, C45313, C30161 and C30162 in the amount of $0.770M and a tolerance of +10%/-10% for the purpose of land purchase and preliminary engineering for the New London Ave #150 new substation project.

This sanction amount of $0.770M is broken down into:

C31696	C28920	C28921
$0.1M Capex	$0.25M Capex	$0.25M Capex
$0.0M Opex	$0.0M Opex	$0.0M Opex
$0.0M Removal	$0.0M Removal	$0.0M Removal

C45313	C30161	C30162
$0.075M Capex	$0.07M Capex	$0.025M Capex
$0.0M Opex	$0.0M Opex	$0.0M Opex
$0.0M Removal	$0.0M Removal	$0.0M Removal

NOTE the potential investment of $7.22M with a tolerance of +50%/-25%, contingent upon submittal and approval of a Project Sanction paper following completion of final engineering, purchase of materials and environmental and legal activities.

1.2 *Brief Description:*

A new 115/12.47 kV metal clad substation with 24/32/40 MVA LTC transformer and four feeder positions is proposed for New London Avenue, Warwick. This project will add distribution capacity in an area that is heavily loaded. The new capacity will relieve transformers, supply lines and distribution feeders that are projected to exceed their summer normal ratings.

The station will be located between West Cranston #21 and Drumrock #14 substations and supplied by a 115kV tap from an existing transmission line.

The station will be located on a parcel of land to be purchased adjacent to another company-owned parcel on New London Avenue.

1.3 *Summary of Projects:*

Project Number	Project Title	Estimate Amount
C28920	New London Ave #150 sub	$ 4.12
C31696	Transmission Tap	$ 1.07
C28921	Distribution feeder getaways	$ 1.30
C30161	3310 reconductoring	$ 0.38
C30162	3311 upgrades	$ 0.06
C45313	T-Sub Circuit Switcher	$ 0.30
	Total	$ 7.22

1.4 *Associated Projects:*

None

1.5 *Prior Sanctioning History (including relevant approved Strategies):*

Date	Governance Body	Sanctioned Amount	Paper Title	Sanction Type
10/1/2008	**DCIG**	**$0.365M**	**DCIG1008P92**	**Partial**
6/19/2009	**AMIC**	**$0.175**	**PWS0922**	**Partial**
06/30/2009	**AMIC**		**SG114**	

1.6 *Next Planned Sanction Review:*

Date (Month/Year)	Purpose of Sanction Review
Sep/2013	Partial Sanction – Final Engineering, procurement

1.7 *Category:*

Category	Reference to Mandate, Policy, or NPV Assumptions
○ Mandatory ◉ Policy- Driven ○ Justified NPV	The investment has been classified as policy driven. Without this project the company will not be able to provide a reliable electric service to the customers in the study area.

1.8 *Asset Management Risk Score*

Asset Management Risk Score: _39__

Primary Risk Score Driver: (Policy Driven Projects Only)

◉ Reliability ○ Environment ○ Health & Safety ○ Not Policy Driven

1.9 *Complexity Level: (if applicable)*

◉ High Complexity ○ Low Complexity ○ N/A

Complexity Score: _29__

1.10 *Process Hazard Assessment*

A Process Hazard Assessment (PHA) is required for this project:

○ Yes ◉ No

1.11 *Business Plan:*

Business Plan Name & Period	Project included in approved Business Plan?	Over / Under Business Plan	Project Cost relative to approved Business Plan ($)
C28920, C28921, C30161 New England Distribution and Sub-Transmission FY13 – FY17	◉ Yes ○ No	◉ Over ○ Under	$0.44M
C31696, C45313 New England Transmission FY13-FY17	◉ Yes ○ No	◉ Over ○ Under	$0.12M

1.12 *If cost > approved Business Plan how will this be funded?*

Re-allocation of funds within the portfolio will be managed by Resource Planning to meet jurisdictional budgetary, statutory and regulatory requirements.

1.13 *Current Planning Horizon:*

		Current Planning Horizon						
	Prior Yrs	Yr. 1 2012/13	Yr. 2 2013/14	Yr. 3 2014/15	Yr. 4 2015/16	Yr. 5 2016/17	Yr. 6 + 2017/18	Total
CapEx	$ 0.10	$ 0.37	$ 0.63	$ 2.16	$ 3.22	$ 0.05	$ -	$ 6.53
OpEx	$ -	$ -	$ 0.02	$ 0.13	$ 0.20	$ 0.00	$ -	$ 0.35
Removal	$ -	$ -	$ 0.02	$ 0.12	$ 0.20	$ 0.00	$ -	$ 0.34
CIAC/Reimbursement	$ -	$ -	$ -	$ -	$ -	$ -	$ -	$ -
Total	$ 0.10	$ 0.37	$ 0.66	$ 2.41	$ 3.62	$ 0.06	$ -	$ 7.22

1.14 *Resources:*

Resource Sourcing			
Engineering & Design Resources to be provided	☑ Internal		☑ Contractor
Construction/Implementation Resources to be provided	☑ Internal		☑ Contractor
Resource Delivery			
Availability of internal resources to deliver project:	○ Red	○ Amber	◉ Green
Availability of external resources to deliver project:	○ Red	○ Amber	◉ Green
Operational Impact			
Outage impact on network system:	○ Red	○ Amber	◉ Green
Procurement impact on network system:	○ Red	○ Amber	◉ Green

1.15 *Key Issues (include mitigation of Red or Amber Resources):*

1	Permitting : 1) wetlands 2) proximity to residences
2	
3	

1.16 *Key Milestones:*

Milestone	**Target Date: (Month/Year)**
Start Preliminary Engineering (kick-off meeting)	May 2009
Planning Sanction	Sep 2013
Engineering Design Complete – EDC	Sep 2014
Project Sanction	Dec 2014
Construction Start	Mar 2015
Construction Complete - CC	June 2016
Submit Facility Rating to ISO	Feb 2016
Ready for Load - RFL	June 2016

Milestone	Target Date: (Month/Year)
Project Closure Report	November 2016

1.17 *Climate Change:*

Are financial incentives (e.g. carbon credits) available?		○ Yes	◉ No
Contribution to National Grid's 2050 80% emissions reduction target:	◉ Neutral	○ Positive	○ Negative
Impact on adaptability of network for future climate change:	◉ Neutral	○ Positive	○ Negative

1.18 *List References:*

1	DCIG1008P92 – West Warwick Substation – Install Metal Clad Switchgear with Four Distribution Feeders and Rebuild the 3310 and 3311 Sub-transmission Lines October 2008
2	SG 114 – Strategy to Build a 115/12.5kV Substation in West Warwick, RI May 2009
3	PWS 0922 – A New 115/12.5kV Substation in West Warwick, RI May 2009

REDACTED

2 *Decisions*

The US Sanctioning Committee (USSC) at a meeting held on December 12, 2012

(a) APPROVED the investment of $0.770M and a tolerance of +10%/-10% for the Purchase of Land and Preliminary Engineering.

(b) NOTED the potential investment $7.22M to and a tolerance of +50%/-25%, contingent upon submittal and approval of a Project Sanction paper following completion of final engineering and design.

(c) NOTED that Tim Moore is the Project Manager and has the approved financial delegation to undertake the activities stated in (a).

Signature.....Date. 1/8/13...

Lee S. Eckert
US Chief Financial Officer
Chairman, US Sanctioning Committee

3 *Sanction Paper Detail*

Title:	New London Avenue Substation #150	**Sanction Paper #:**	USSC-12-472
Project #:	See below summary of projects	**Sanction Type:**	Partial Sanction
Operating Company:	Narragansett Electric	**Date of Request:**	12/12/2012
Author:	Bob Duero (Parsons)/Tim Moore	**Sponsor:**	Cheryl A Warren
Utility Service:	Electricity T & D	**Project Manager:**	Bob Duero (Parsons)/Tim Moore

3.1 *Background*

The Central Rhode Island West study area encompasses the Towns of Coventry, West Greenwich, and West Warwick and sections of the Cities of Cranston and Warwick, and Towns of East Greenwich, Exeter, and Scituate. The area load peaked at approximately 169 MVA in 2012 with 47,000 customers served. The study area and existing area substations are shown in Figure 1.

In 2008 a comprehensive study was completed for this area. This study identified an immediate need for new distribution capacity in the area to resolve short-term loading concerns and a new substation in the Warwick/West Warwick area to resolve long-term loading concerns and significant exposure for various n-1 contingencies. The 2012 Annual Capacity Plan still supports the need for a new substation in this area.

The Central Rhode Island West study area is still supplied by a highly utilized supply and distribution system. It is becoming increasingly challenging to operate this system within normal loading limits and to supply load growth in this area. This strategy paper documents the long-term solution for the area.

3.2 *Drivers*

The primary driver is projected thermal overloads of transformers, distribution feeders and supply lines during period of system peak loading. There have been a number of large developments in the area [redacted] that continue to add load to an area with heavily loaded feeders and supply lines. A new modular feeder along with load transfers have been utilized to prevent thermal overloads as a result of the new load.

The tables below show the facilities in the study area that are projected to exceed 100% of their rating during either normal operation or contingencies. Table 1 below shows feeders in the area with loads projected to exceed 100% of their normal rating after the MITS substation has been placed in service; Table 2 shows transformers with loads projected to exceed 100% of their normal rating; and Table 3 shows the supply lines that are overloaded during contingencies.

Substation	Feeder	SN Rating (Amps)	2012		2014		2016		2018		2020	
			Amps	%SN	Amps	%SN	Amps	%SN	Amps	%SN	Amps	%SN
ANTHONY	64F1	361	388	107%	336	93%	353	98%	359	99%	363	101%
ANTHONY	64F2	361	312	86%	344	95%	361	100%	367	102%	372	103%
HOPE	15F2	476	421	88%	465	98%	487	102%	496	104%	502	105%
HOPKINS HILL	63F2	530	464	88%	512	97%	537	101%	546	103%	553	104%
KENT COUNTY	22F3	530	442	83%	487	92%	511	96%	520	98%	527	99%
KENT COUNTY	22F4	586	525	90%	579	99%	607	104%	618	105%	626	107%
ARCTIC	49J4	295	266	90%	294	100%	308	104%	313	106%	317	108%

Table 1 – Project Loads through 2020 for Feeders and Loads Greater than 100% assuming Tiogue Ave substation is in-service.

		2012		2014		2016		2018		2020	
Substation	Tranf. ID.	MVA	% SN	MVA	% SN	MVA	% SN	MVA	% SN	MVA	% SN
ANTHONY	1	8.4	107%	7.3	93%	7.6	98%	7.7	99%	7.8	101%
ANTHONY	2	6.7	86%	7.4	95%	7.8	100%	7.9	102%	8.0	103%

Table 2 – Project Loads through 2020 for Transformers with Loads Greater than 100% assuming Tiogue Ave substation is in-service.

Circuit	Line Section		2012		2014		2016		2018		2020	
	From	To	MVA	% SE	MVA	% SE	MVA	% SE	MVA	% SE	MVA	% SE
2230	Natick 29 Tap	Artic 49 Tap	34.0	96%	37.5	106%	39.3	111%	40.0	113%	40.5	114%
2230	Warwick Mall 28 Tap	Natick 29	14.6	95%	16.1	105%	16.9	110%	17.2	112%	17.4	113%
2232	Anthony Tap	Coventry Tap	14.5	95%	16.0	104%	16.8	110%	17.1	112%	17.3	113%
3310	Kent County 22	Major Potter Rd	51.6	115%	53.2	119%	55.8	124%	56.7	127%	57.5	128%
3310	Major Potter Rd	Hopkins Hill Riser	51.6	97%	53.2	100%	55.8	105%	56.7	107%	57.5	108%
3311	Kent County 22	Hopkins Hill Tap	59.5	112%	61.9	116%	64.9	122%	66.0	124%	66.9	126%
3311	Hopkins Hill Tap	Hopkins Hill 63	51.6	97%	53.2	100%	55.8	105%	56.7	107%	57.5	108%

Table 3 – Projected Contingency Loads through 2020 for Supply Line Segments with Loads Greater than 100% assuming Tiogue Ave is in-service.

The tables below show projected loading after the New London Ave substation is placed in service. Table 4 shows projected feeder loading; Table 5 shows projected transformer loading; and Table 6 shows projected supply line loading post an n-1 contingency.

Substation	Feeder	SN Rating (Amps)	2012 Amps	2012 %SN	2014 Amps	2014 %SN	2016 Amps	2016 %SN	2018 Amps	2018 %SN	2020 Amps	2020 %SN
ANTHONY	64F1	361	328	91%	355	98%	304	84%	317	88%	329	91%
ANTHONY	64F2	361	336	93%	363	101%	313	87%	327	91%	339	94%
HOPE	15F2	476	488	103%	529	111%	402	84%	419	88%	435	91%
HOPKINS HILL	63F2	530	495	93%	536	101%	515	97%	537	101%	558	105%
KENT COUNTY	22F3	530	505	95%	547	103%	289	54%	301	57%	313	59%
KENT COUNTY	22F4	586	535	91%	580	99%	555	95%	579	99%	601	103%
ARCTIC	49J4	452	293	65%	317	70%	274	61%	285	63%	296	66%
WEST WARWICK	F1	645					455	71%	474	74%	493	76%
WEST WARWICK	F2	530					347	66%	362	68%	376	71%
WEST WARWICK	F3	530					309	58%	322	61%	334	63%
WEST WARWICK	F4	645					327	51%	341	53%	354	55%

Table 4 – Project Loads through 2020 for Feeders Post New London Ave Substation

Substation	Tranf. ID.	2012 MVA	2012 % SN	2014 MVA	2014 % SN	2016 MVA	2016 % SN	2018 MVA	2018 % SN	2020 MVA	2020 % SN
ANTHONY	1	9.0	116%	7.7	98%	6.6	84%	6.8	88%	7.1	91%
ANTHONY	2	7.3	93%	7.9	101%	6.8	87%	7.1	90%	7.3	94%

Table 5 – Project Loads through 2020 for Transformers Post New London Ave Substation

Circuit	Line Section		2012		2014		2016		2018		2020	
	From	To	MVA	% SE	MVA	% SE	MVA	% SE	MVA	% SE	MVA	% SE
2230	Natick 29 Tap	Artic 49 Tap	34.0	96%	37.5	106%	33.6	95%	34.2	96%	34.6	98%
2230	Warwick Mall 28 Tap	Natick 29	14.6	95%	16.1	105%	15.3	100%	15.6	102%	15.8	103%
2232	Anthony Tap	Coventry Tap	14.5	95%	16.0	104%	14.8	96%	15.0	98%	15.2	99%
3310	Kent County 22	Major Potter Rd	51.6	115%	53.2	119%	51.6	115%	52.5	117%	53.2	119%
3310	Major Potter Rd	Hopkins Hill Riser	51.6	97%	53.2	100%	51.6	97%	52.5	99%	53.2	100%
3311	Kent County 22	Hopkins Hill Tap	59.5	112%	61.9	116%	60.8	114%	61.8	116%	62.7	118%
3311	Hopkins Hill Tap	Hopkins Hill 63	51.6	97%	53.2	100%	51.6	97%	52.5	99%	53.2	100%

Table 6 – Projected Contingency Loads through 2020 for Supply Line Segments Post New London Ave Substation

REDACTED

3.3 *Project Description*

A new 115/12.47 kV metal clad substation with 24/32/40 MVA LTC transformer and four feeder positions is proposed for New London Avenue, Warwick. The station will be located adjacent to the transmission corridor between West Cranston and Drumrock substations and supplied by a 115 kV tap from an existing transmission line. The proposed location of the new substation is shown in Figure 2 and a proposed one line is shown in Figure 3.

Initially, four 12.47 kV feeders will be installed and the distribution system will be rearranged to offload existing transformers, supply lines and distribution feeders. The layout of the 12.47 kV distribution feeders, after installation of the station is shown in Figure 4.

There are two sections of the 3310 and 3311 supply lines that are projected to be overloaded on contingency after the new station is in service. These lines are classified on the books as transmission assets. The estimated cost of reconductoring approximately 5,000 ft of the 3310 line to eliminate the overloads is estimated at $380,000 and the cost of upgrading the 3311 for 120°C operation is $55,000. The alternative to the reconductoring and upgrade is to remotely drop a feeder at Hopkins Hill substation on a supply line contingency. It is recommended that these two circuits be upgraded. There is an amount of $95,000 included in this paper to cover the cost of preliminary engineering for these two projects.

3.4 *Benefits Summary*

Relief of the customer's (Narragansett Electric Company) potential distribution loading issues and improving the reliability of the distribution supply system in the WCRI area are the primary benefits of this project.

3.5 *Business Issues*

There are no significant business issues beyond what has been described elsewhere.

3.6 *Alternatives*

The no build option will result in thermal overloads to the distribution equipment and ultimately lead to equipment failure unless service is interrupted to customers on these feeders during high load conditions. Operating the system by interrupting load to customers will have a negative impact on system reliability and possibly lead to increased regulatory oversight and penalties. There are several build alternatives that were considered.

Alternative 1:

One alternative involved the expansion of existing 115/12.47kV substations at West Cranston and Kent and Kent County substations. The supply lines would have to be rebuilt for a larger capacity to accommodate two new modular stations in West Warwick and Coventry. It will be necessary to procure sites with the appropriate zoning for each station. The distribution system will be modified to accommodate the new stations. The estimated distribution cost of this option is $11,300,000. There will be an additional $3,800,000 in associated transmission costs. This option exceeded the cost of the preferred option; there are no additional benefits; and the uncertainty of finding appropriate lots make this option unattractive at this time.

Alternative 2:

A second alternative considered was the development of a new 115/12.47kV metal clad station on a site in Cranston near Phenix Avenue. The transmission costs are similar to the preferred plan, however, the distribution costs to extend feeders from this site to relive the overloaded feeders and supply lines would be significantly more due to the limited routes available and the distance from the overloaded facilities. The detail of this option were not fully developed as the estimated distribution costs far exceeded those of the preferred alternative which was near the stations with loading issues. This option is also not recommended at this time.

3.7 *Safety, Environmental and Project Planning Issues*

Environmental, Permitting and Licensing staff has performed assessments of the property as part of the land purchase due diligence process, and has performed high-level assessments of the project. More detailed investigation will be completed within the Preliminary Engineering Stage. The following issues have been identified to date:

- A special use permit will be required to use the property for a substation. As part of that permit, requirements for fencing, driveways, landscape and screening, and setbacks must be met, or variances applied for and obtained.
- As part of the due diligence process, a Phase 1 Environmental Site Assessment (ESA) was conducted with no Recognizable Environmental Conditions (RECs) found.
- A Storm Water Pollution Prevention Plan (SWPPP) will be required.
- The land parcel has several wetlands. It is likely that Rhode Island Department of Environmental Management (RIDEM) freshwater wetlands permitting will be required
- A Soil Erosion and Sediment Control Plan may be required by the City of Warwick.

This project is classified as Outreach Level 1, because a high level of public interaction is expected. The factors that support level 1 classification include interaction with the nearby residential neighbors, and the possible environmental related permitting for new substation construction. A stakeholder outreach plan is being developed.

The land purchase process has passed the due diligence investigation period, ending October 30 2012, without the company exercising its right to walk away from the purchase. The next step in the land purchase is to close the sale of the property within 30 days after approval of a subdivision plan of the property. The subdivision of the property will allow the seller to retain

approximately one (1) acre of the nine+ (9) acre parcel on which to reside. The subdivision plan is anticipated to be an "administrative" filing only, and the plan is being prepared for submittal in December 2012.

3.8 *Execution Risk Appraisal*

Number	Detailed Description of Risk / Opportunity	Probability	Impact		Score		Strategy	Pre-Trigger Mitigation Plan	Residual Risk	Post Trigger Mitigation Plan
			Cost	Schedule	Cost	Schedule				
1	Wetlands mitigation required by agencies may be greater than anticipated	3	2	4	6	12	Accept	Begin permitting process as early as possible to quantify risk and develop mitigation plans, design	Unknown	Address with offsets
2	Abutters views of substation, T-Line construction could cause delays	3	2	0	6	-	Accept	Institute Outreach Plan early	Unknown	Address identified abutters issues with potential solutions suh as screening, restricted work hours
3	Elevation differential between T-Line Tap structure and proposed sub location may cause additional cost for T-Line tap construction	2	2	0	4	-	Accept	Review alternates for transmission tap structure and location during preliminary engineering	Unknown	Final Engineering Design will address and mitigate risk
4	Subsurface conditions may be rocky, ledgy	2	2	2	4	4	Accept	Conduct geotechnical studies during preliminary engineering, design asset placements to minimize impact	Unknown	Final Engineering Design will address and mitigate risk

3.9 *Permitting*

Permit Name	Probability Required (Certain/ Likely/ Unlikely)	Duration	Status (Complete/ In Progress Not Applied For)	Estimated Completion Date
Special Use	Certain		In Progress Not Applied For	
RIDEM Wetlands permitting	Likely		In Progress Not Applied For	

3.10 *Investment Recovery*

3.10.1 Investment Recovery and Regulatory Implications

N/A

3.10.2 Customer Impact

This project results in an indicative first full year revenue requirement when the asset is placed in service equal to approximately $1.146M. This is indicative only. The actual revenue requirement will differ, depending upon the timing of the next rate case and/or the timing of the next filing in which the project is included in rate base.

3.10.3 CIAC / Reimbursement

$M	Prior Yrs	Yr. 1 2012/13	Yr. 2 2013/14	Yr. 3 2014/15	Yr. 4 2015/16	Yr. 5 2016/17	Yr. 6 + 2017/18	Total
CIAC/Reimbursement	$ -	$ -	$ -	$ -	$ -	$ -	$ -	$ -

3.11 *Financial Impact to National Grid*

3.11.1 Cost Summary Table

Project Number	Project Title	Project Estimate	Spend	Prior Yrs	Current Planning Horizon Yr. 1 2012/13	Yr. 2 2013/14	Yr. 3 2014/15	Yr. 4 2015/16	Yr. 5 2016/17	Yr. 6 + 2017/18	Total
C28920	New London Ave #150 sub	2	CapEx	$ 0.04	$ 0.30	$ 0.35	$ 1.30	$ 1.70	$ 0.05	$ -	$ 3.74
			OpEx	$ -	$ -	$ 0.01	$ 0.08	$ 0.10	$ 0.00	$ -	$ 0.19
			Removal	$ -	$ -	$ 0.01	$ 0.08	$ 0.10	$ 0.00	$ -	$ 0.19
			Total	$ 0.04	$ 0.30	$ 0.37	$ 1.46	$ 1.90	$ 0.06	$ -	$ 4.12
C31696	Transmission Tap	2	CapEx	$ 0.07	$ 0.07	$ 0.18	$ 0.25	$ 0.45	$ -	$ -	$ 1.02
			OpEx	$ -	$ -	$ 0.00	$ -	$ 0.03	$ -	$ -	$ 0.03
			Removal	$ -	$ -	$ 0.00	$ -	$ 0.02	$ -	$ -	$ 0.02
			Total	$ 0.07	$ 0.07	$ 0.18	$ 0.25	$ 0.50	$ -	$ -	$ 1.07
C28921	Distribution feeder getaways	2	CapEx	$ -	$ -	$ 0.10	$ 0.50	$ 0.50	$ -	$ -	$ 1.10
			OpEx	$ -	$ -	$ 0.01	$ 0.05	$ 0.05	$ -	$ -	$ 0.11
			Removal	$ -	$ -	$ 0.01	$ 0.04	$ 0.05	$ -	$ -	$ 0.09
			Total	$ -	$ -	$ 0.11	$ 0.59	$ 0.60	$ -	$ -	$ 1.30
C30161	3310 reconductoring	2	CapEx	$ -	$ -	$ -	$ 0.04	$ 0.30	$ -	$ -	$ 0.34
			OpEx	$ -	$ -	$ -	$ -	$ 0.02	$ -	$ -	$ 0.02
			Removal	$ -	$ -	$ -	$ -	$ 0.03	$ -	$ -	$ 0.03
			Total	$ -	$ -	$ -	$ 0.04	$ 0.35	$ -	$ -	$ 0.38
C30162	3311 upgrades	2	CapEx	$ -	$ -	$ -	$ -	$ 0.04	$ -	$ -	$ 0.04
			OpEx	$ -	$ -	$ -	$ -	$ 0.01	$ -	$ -	$ 0.01
			Removal	$ -	$ -	$ -	$ -	$ 0.01	$ -	$ -	$ 0.01
			Total	$ -	$ -	$ -	$ -	$ 0.06	$ -	$ -	$ 0.06
C45313	T-sub Circuit Switcher	Est Lvl	CapEx	$ -	$ -	$ -	$ 0.08	$ 0.23	$ -	$ -	$ 0.30
			OpEx	$ -	$ -	$ -	$ -	$ -	$ -	$ -	$ -
			Removal	$ -	$ -	$ -	$ -	$ -	$ -	$ -	$ -
			Total	$ -	$ -	$ -	$ 0.08	$ 0.23	$ -	$ -	$ 0.30

3.11.2 Project Budget Summary Table

Project Costs per Business Plan

		Current Planning Horizon						
	Prior Yrs	Yr. 1	Yr. 2	Yr. 3	Yr. 4	Yr. 5	Yr. 6 +	
	(Actual)	2012/13	2013/14	2014/15	2015/16	2016/17	2017/18	Total
CapEx	$ 0.10	$ 0.78	$ 1.90	$ 3.05	$ 0.35	$ -	$ -	$ 6.18
OpEx	$ -	$ 0.03	$ 0.10	$ 0.12	$ 0.00	$ -	$ -	$ 0.26
Removal	$ -	$ 0.07	$ 0.12	$ 0.15	$ 0.00	$ -	$ -	$ 0.34
Total Cost in Bus. Plan	$ 0.10	$ 0.88	$ 2.12	$ 3.32	$ 0.36	$ -	$ -	$ 6.78

Variance **(Business Plan-Project Estimate)**

		Current Planning Horizon						
	Prior Yrs	Yr. 1	Yr. 2	Yr. 3	Yr. 4	Yr. 5	Yr. 6 +	
	(Actual)	2012/13	2013/14	2014/15	2015/16	2016/17	2017/18	Total
CapEx	$ -	$ 0.41	$ 1.27	$ 0.89	$ (2.87)	$ (0.05)	$ -	$ (0.35)
OpEx	$ -	$ 0.03	$ 0.08	$ (0.01)	$ (0.20)	$ (0.00)	$ -	$ (0.09)
Removal	$ -	$ 0.07	$ 0.11	$ 0.03	$ (0.20)	$ (0.00)	$ -	$ 0.00
Total Cost in Bus. Plan	$ -	$ 0.51	$ 1.46	$ 0.91	$ (3.27)	$ (0.06)	$ -	$ (0.44)

3.11.3 Cost Assumptions

These cost estimates are based on study grade (+50/-25%). Planning and Project sanction cost estimates will be developed later at sanction steps. Preliminary engineering cost estimates were re-developed by the project team through the land due diligence process.

3.11.4 Net Present Value / Cost Benefit Analysis

This is not an NPV project.

3.11.5 Additional Impacts

3.12 *Statements of Support*

3.12.1 Supporters

Role	Name	Responsibilities
Investment Planning – Distribution NE	Glen Diconza	Endorse relative to business plan
Investment Planning - Transmission NE	Antoinette Stores	Endorse relative to business plan
Engineering and Design - Substations	John Gavin	Endorse scope, design, conformance with design standards
Resource Planning, Transmission Line and Substation	Mark Phillips	Endorses Resources, cost estimate, schedule, and Portfolio Alignment
Project Management, T&D Line New England	Tim Moore	Endorses Resources, cost estimate, schedule

3.12.2 Reviewers

Reviewer List	Name
Finance	Karen Hamel
Regulatory	Gideon Katsh
Jurisdictional Delegates	Jennifer Grimsley

4 Appendices

4.1 *Other Appendices*

Confidential Ref. No. DCIC1008P92

13. Appendices

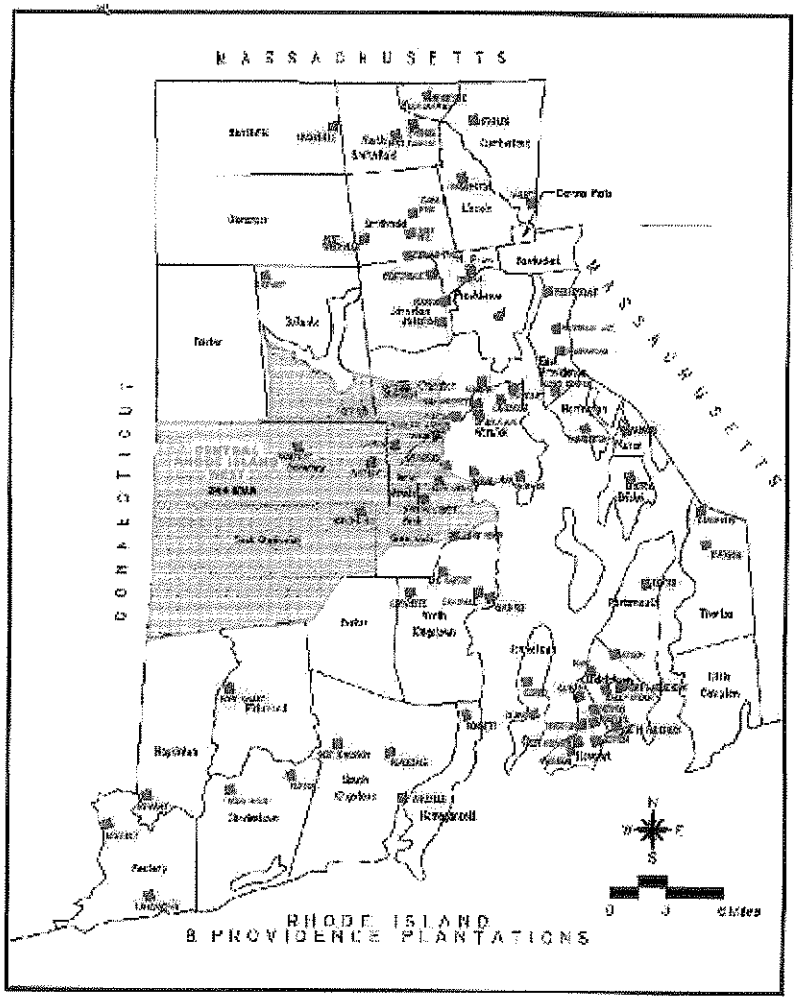

Figure 1 Central Rhode Island West Study Area

PLAT MAP

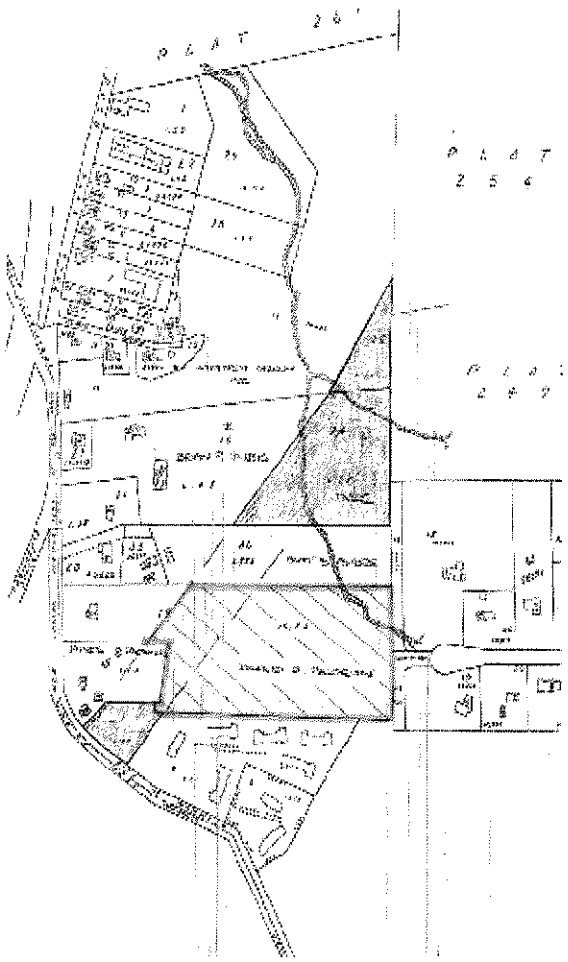

Figure 2

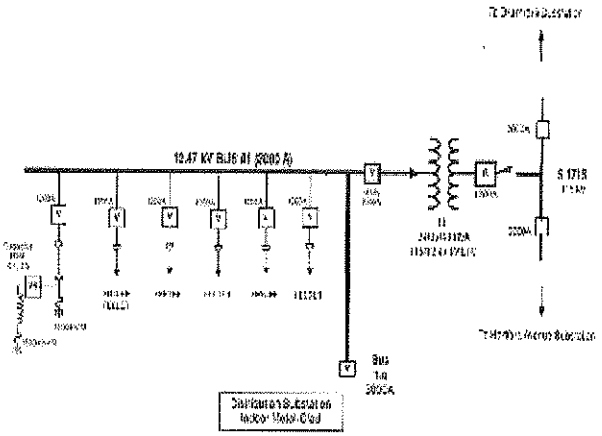

Figure 3 Proposed One-line: New West Warwick Substation

Confidential Ref. No. DOC1008P92

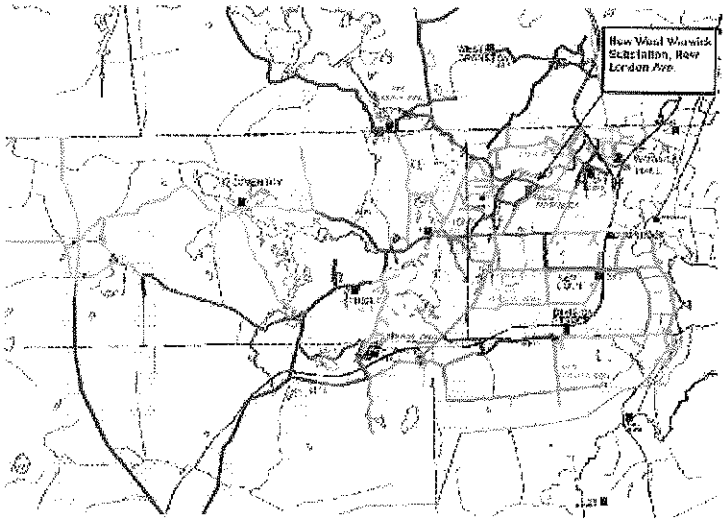

Figure 4 Proposed Layout of Feeders After Installation of New West Warwick Substation

7/29/2018

REDACTED

nationalgrid

Short Form Sanction Paper

Title:	Lee St Substation Retirement	**Sanction Paper #:**	USSC-13-285v2
Project #:	C050758, C051118	**Sanction Type:**	Sanction
Operating Company:	The Narragansett Electric Co.	**Date of Request:**	7/17/2018
Author:	Liam Watts	**Sponsor:**	Carol A. Sedewitz, VP Electric Asset Management
Utility Service:	Electricity T&D	**Project Manager:**	Liam Watts

1 Executive Summary

1.1 *Sanctioning Summary*

This paper requests full sanction for the Lee St Substation and D-Line Retirement Project (C050758 and C051118) in the amount of $3.450M with a tolerance of +/- 10% for the purposes of full implementation.

This sanction amount is $3.450M broken down into:

$2.615M Capex
$0.183 M Opex
$0.652M Removal

This project has undergone a Capital Efficiency Review with the following determination:

This project is in final design and/or has secured the necessary agency approvals to proceed and is ready to be released for construction. At this stage, re-evaluation of the project design would likely result in significant delays to the project schedule and an increase in cost. This project will be evaluated for any procurement or construction efficiency opportunities upon its release for construction.

1.2 *Project Summary*

This project involves removing all equipment from the Lee Street Substation in Pawtucket, RI and turning it into a greenfield site. The station load will be supplied from the existing area 13.8kV distribution system through conversions and the use of pole mounted step-down transformers.

2 Project Detail

2.1 Background

Lee Street is a 13.8/4.16kV substation with a single 7.0 MVA transformer supplying three feeders. It serves approximately 2,586 customers with 4.10MW of load in the City of Pawtucket. This station is one of eleven 13.8/4.16kV substations in the Pawtucket area. These stations are primarily single metal-clad switchgear modules supplied by a single load tap changing transformer.

It is difficult to take stations of this type out of service for routine maintenance due to the single transformer nature of the design. The loads on the 4.16kV distribution stations are backed up through the use of feeder ties from adjacent stations. The existing feeder tie capacity is not always sufficient to offload a station to facilitate maintenance. In addition, there is no metering in these stations to accurately determine feeder or station loading making operating these stations even more difficult.

The 4.16kV distribution circuits are installed on the same poles as the 13.8kV distribution circuits in areas where both voltages exist. Many of the 4.16kV transformers are dual voltage transformers and ready for conversion to the 13.8kV system.

The metal-clad switchgear at Lee Street substation has been identified for replacement in accordance with the Metal-clad Switchgear Strategy. The metal-clad switchgear at the Lee Street substation was manufactured in 1949, and is therefore nearing the recommended age for decommissioning based on its defined in-service lifespan. The bus insulation is of an inferior design and is prone to failure. The gaskets show signs of moisture ingress and rust on the flooring. The flooring is warped making it difficult to rack the breakers in and out. One breaker is out-of-service due to a recent failure and two others have been refurbished recently due to failures. One breaker is obsolete and targeted for replacement via the Company's Circuit Breaker and Recloser Program. The transformer is on National Grid's Watch List and is PCB contaminated, posing a potential threat to both future public safety and environmental conditions. The high side of the transformer is connected to the substation supply via an oil switch contained in a metal enclosure. These enclosures have a high failure rate and are being removed from the system on a programmatic basis. The low side of the transformer is connected via enclosed bus, known as throat connected, making this transformer difficult to replace in the event of a failure.

2.2 *Drivers*

The primary driver of this project is to address the poor asset condition of the existing metal-clad switchgear. Removing these units and replacing them with facilities that meet the current Company standards will reduce the risk of failure and possible customer interruptions while also maintaining reliability in the area.

The secondary driver is safety. The new and more modern metal-clad switchgear designs have a more reliable insulation system that reduces the probability of bus failures. They are manufactured with a robust arc resistant design, come equipped with remote racking devices, and have the ability to provide proper grounding and isolation for worker safety.They are manufactured with a robust arc resistant design, come equipped with remote racking devices, and have the ability to provide proper grounding and isolation for worker safety.

2.3 *Project Description*

The Lee Street substation will be retired. The station load will be supplied from the existing area 13.8kV distribution system through conversions and the use of pole mounted step-down transformers. This is the most economical approach for this area and in-line with the long term plan for this area to continue to expand the 13.8kV distribution system. This project removes all substation equipment from Lee Street, foundations, substation yard fence and turns the site into a greenfield.

2.4 *Benefits*

The station load will be supplied from the existing area 13.8kV distribution system through conversions and the use of pole mounted step-down transformers. This is the most economical approach for this area and in-line with the long term plan for this area to continue to expand the 13.8kV distribution system.

2.5 *Business & Customer Issues*

The metal-clad switchgear at Lee Street substation has been identified for replacement in accordance with the Metal-clad Switchgear Strategy. The metal-clad switchgear was manufactured in1949. The bus insulation is of an inferior design and is prone to failure. These enclosures have a high failure rate and are being removed from the system on a programmatic basis

2.6 *Alternatives*

Alternative 1: Replace the Metal Clad switchgear
This alternative would replace the metal clad switchgear at the station. The transformer would be replaced with a conventional transformer (throat connection would be removed), and the high side oil switch would be removed and replaced with a high side recloser. New ductline and feeder getaway cables would be installed from the new switchgear to each riser pole. Each feeder would be cutover from the existing switchgear to the new switchgear. The conceptual estimate of this plan is $2.960M.

However, this alternative assumes there is sufficient space in the substation yard to allow for the installation of the new switchgear and transformer while maintaining the existing station in service during construction.

2.7 *Investment Recovery*

Investment recovery will be through standard rate recovery mechanisms.

2.7.1 Customer Impact

This project results in an indicative first full year revenue requirement when the asset is placed in service equal to approximately $0.389M

3 *Related Projects, Scoring, Budgets*

3.1 *Summary of Projects*

Project Number	Project Type (Elec only)	Project Title	Estimate Amount ($M)
C050758	Dline	Lee St Substation Retirement	3.171
C051118	D-Sub	Lee St Substation Retirement	0.279
		Total	3.450

3.2 *Associated Projects*

N/A

3.3 *Prior Sanctioning History*

Describe previous sanctions for the projects included in the scope of this paper (Newest to Oldest).

Date	Governance Body	Sanctioned Amount	Potential Project Investment	Sanction Type	Potential Investment Tolerance
9/24/2013	USSC	$0.500M	$1.100M	Lee St. Substation Retirement	+/- 25%

3.4 *Category*

Category	Reference to Mandate, Policy, NPV, or Other
○ Mandatory ◉ Policy- Driven ○ Justified NPV ○ Other	This project complies with the Company's Metal-clad Asset Replacement Strategy

3.5 *Asset Management Risk Score*

Asset Management Risk Score: 41

Primary Risk Score Driver: (Policy Driven Projects Only)

◉ Reliability ○ Environment ○ Health & Safety ○ Not Policy Driven

3.6 *Complexity Level*

○ High Complexity ◉ Medium Complexity ○ Low Complexity ○ N/A

Complexity Score: 19

3.7 *Next Planned Sanction Review*

Date (Month/Year)	Purpose of Sanction Review
September 2019	Closure Sanction

4 *Financial*

4.1 *Business Plan*

Business Plan Name & Period	Project included in approved Business Plan?	Over / Under Business Plan	Project Cost relative to approved Business Plan ($)
FY 19-23 NE Distribution & Transmission Capital Plan	◉ Yes ○ No	○ Over ◉ Under ○ NA	$0.042M

4.2 *CIAC / Reimbursement*

N/A

4.3 *Cost Summary Table*

Project Number	Project Title	Project Estimate Level (%)	Spend	Prior Yrs	Current Planning Horizon ($M) Yr. 1 2018/19	Yr. 2 2019/20	Yr. 3 2020/21	Yr. 4 2021/22	Yr. 5 2022/23	Yr. 6 + 2023/24	Total
C050758	Dline	+/- 10%	CapEx	0.127	1.715	0.720	0.000	0.000	0.000	0.000	2.562
			OpEx	0.000	0.129	0.054	0.000	0.000	0.000	0.000	0.183
			Removal	0.000	0.300	0.126	0.000	0.000	0.000	0.000	0.426
			Total	0.127	2.144	0.900	0.000	0.000	0.000	0.000	3.171
C051118	D-Sub	+/- 10%	CapEx	0.030	0.000	0.023	0.000	0.000	0.000	0.000	0.053
			OpEx	0.000	0.000	0.000	0.000	0.000	0.000	0.000	0.000
			Removal	0.022	0.000	0.204	0.000	0.000	0.000	0.000	0.226
			Total	0.052	0.000	0.227	0.000	0.000	0.000	0.000	0.279
Total Project Sanction			CapEx	0.157	1.715	0.743	0.000	0.000	0.000	0.000	2.615
			OpEx	0.000	0.129	0.054	0.000	3.000	0.000	0.000	0.183
			Removal	0.022	0.300	0.330	0.000	0.000	0.000	0.000	0.652
			Total	0.179	2.144	1.127	0.000	3.000	0.000	0.000	3.450

4.4 *Project Budget Summary Table*

Project Costs Per Business Plan

$M		Current Planning Horizon ($M) Yr. 1 2018/19	Yr. 2 2019/20	Yr. 3 2020/21	Yr. 4 2021/22	Yr. 5 2022/23	Yr. 6 + 2023/24	Total
CapEx		1.000	1.575	0.000	0.000	0.000	0.000	2.575
OpEx		0.215	0.012	0.000	0.000	0.000	0.000	0.227
Removal		0.211	0.300	0.000	0.000	0.000	0.000	0.511
Total Cost in Bus. Plan		1.426	1.887	0.000	0.000	0.000	0.000	3.313

Variance (Business Plan-Project Estimate)

$M		Current Planning Horizon ($M) Yr. 1 2018/19	Yr. 2 2019/20	Yr. 3 2020/21	Yr. 4 2021/22	Yr. 5 2022/23	Yr. 6 + 2023/24	Total
CapEx		(0.715)	0.832	0.000	0.000	0.000	0.000	0.117
OpEx		0.086	(0.042)	0.000	0.000	0.000	0.000	0.044
Removal		(0.089)	(0.030)	0.000	0.000	0.000	0.000	(0.119)
Total Cost in Bus. Plan		(0.718)	0.760	0.000	0.000	0.000	0.000	0.042

5 Key Milestones

Milestone	Target Date: (Month/Year)
Partial Sanction	September 2013
Engineering Design Complete	February 2015
Dline Construction Start	May 2018
Project Sanction	July 2018
Dline Construction Finish	March 2019
Substation Construction Start	June 2019
Substation Construction Finish	July 2019
Project Closure Sanction	September 2019

6 Climate Change

Contribution to National Grid's 2050 80% emissions reduction target:	◉ Neutral	○ Positive	○ Negative
Impact on adaptability of network for future climate change:	◉ Neutral	○ Positive	○ Negative

7 Statements of Support

7.1.1 Supporters

The supporters listed have aligned their part of the business to support the project.

Department	Individual	Responsibilities
Investment Planning	Glen DiConza	Endorses relative to 5-year business plan or emergent work
Resource Planning	Daniel Marceau	Endorses construction resources, cost estimate, schedule, and portfolio alignment
Resource Planning	Mark Phillips	Endorses construction resources, cost estimate, schedule, and portfolio alignment
Asset Management / Planning	Ryan Constable	All NE Dist Line/Substation and Sub-T Line Projects
Engineering and Design	Kevin Hellmuth	Endorses scope, design, conformance with design standards
Project Management	Shaun Vacher	Endorses resources, cost estimate, schedule
Electric Project Estimation	John Duffy	Endorses Cost Estimate

7.1.2 Reviewers

The reviewers have provided feedback on the content/language of the paper.

Function	Individual
Finance	Benjamin Mackenzie-Grieve
Regulatory	Ed Turieo
Jurisdictional Delegate	Sonny Anand
Procurement	Diego Chevere
Control Center (CC)	Michael Gallagher

7.1.3 List References

1	Lee Street Station Retirement – Feeder Conversion Project Grade Estimate
2	Lee Street 30 Station Retirement –Project Grade Estimate

Short Form Sanction Paper

Decisions

I:

(a) APPROVE this paper and the investment of $3.450M and a tolerance of +/-10%

(b) NOTE that Liam Watts is the Project Manager and has the approved financial delegation.

Signature.....Date...7/27/18...

David H. Campbell, Vice President ServCo Business Partnering, USSC Chair

8 Other Appendices

N/A

8.1 Sanction Request Breakdown by Project

N/A

REDACTED

Short Form Sanction Paper

nationalgrid

Title:	Lee St Substation Retirement	**Sanction Paper #:**	USSC-13-285
Project #:	C050758, C051118	**Sanction Type:**	Partial Sanction
Operating Company:	The Narragansett Electric Co.	**Date of Request:**	09/17/2013
Author:	Jack P. Vaz	**Sponsor:**	Cheryl A. Warren
Utility Service:	Electricity T&D	**Project Manager:**	Marc Bristol

1 *Executive Summary*

1.1 Sanctioning Summary

This paper requests partial sanction of projects C050758 and C051118 in the amount $0.500M with a tolerance of +/- 10% for the purposes of Engineering, Material, and initial construction activities.

The sanction amount is $0.500M broken down into:

$0.490M Capex
$0.000M Opex
$0.010M Removal

NOTE the potential investment of $1.100M with a tolerance of -25% to +25%, contingent upon submittal and approval of a Project Sanction paper following completion of Engineering.

2 *Project Detail*

2.1 Project Description, Justification, Customer Issues, Drivers and Benefits

Lee Street is a 13.8/4.16kV substation with a single 7.0 MVA transformer supplying three feeders. It serves approximately 2,586 customers with 4.10MW of load in the City of Pawtucket. This station is one of eleven 13.8/4.16kV substations in the Pawtucket area. These stations are primarily single metal-clad switchgear modules supplied by a single LTC transformer.

It is difficult to take stations of this type out of service for routine maintenance due to the single transformer nature of the design. The loads on the 4.16kV distribution stations are backed up through the use of feeder ties from adjacent stations. The existing feeder tie capacity is not always sufficient to offload a station to facilitate maintenance. In addition, there is no metering in these stations to accurately determine feeder or station loading making operating these stations even more difficult.

In general, the 4.16kV distribution circuits are installed on the same poles as the 13.8kV distribution circuits in areas where both voltages exist. Many of the 4.16kV transformers are dual voltage transformers and ready for conversion to the 13.8kV system.

The metal-clad switchgear at Lee Street substation has been identified for replacement in accordance with the Metal-clad Switchgear Strategy. The metal-clad switchgear was manufactured in 1949. The bus insulation is of an inferior design and is prone to failure. The gaskets show signs of moisture ingress and rust on the flooring. The flooring is warped making it difficult to rack the breakers in and out. One breaker is out-of-service due to a recent failure and two others have been refurbished recently due to failures. One breaker is obsolete and targeted for replacement via our Circuit Breaker and Recloser Program. The transformer is on our Watch List and is PCB contaminated. The high side of the transformer is connected to the substation supply via an oil switch contained in a metal enclosure. These enclosures have a high failure rate and are being removed from the system on a programmatic basis. The low side of the transformer is connected via enclosed bus, known as throat connected, making this transformer difficult to replace in the event of a failure.

The primary driver of this project is asset condition of the metal-clad switchgear. Replacing these units will reduce the risk of failure and possible customer interruptions while maintaining reliability in the area. The secondary driver is safety. The new and more modern metal-clad switchgear designs have a reliable insulation system that reduces the probability of bus failures. They are manufactured with a robust arc resistant design, come equipped with remote racking devices, and have the ability to provide proper grounding and isolation for worker safety.

The recommended plan to address the concerns at Lee Street is to retire the station. The station load will be supplied from the existing area 13.8kV distribution system thru conversions and the use of pole mounted step-down transformers. This is the most economical approach for this area and in-line with the long term plan for this area to continue to expand the 13.8kV distribution system. This project removes all substation equipment from Lee Street, foundations, substation yard fence and turns the site into a greenfield.

2.1.1 Alternative*: Replace the Metal Clad switchgear and Power Transformer*

This plan would replace the metal clad switchgear at the station. The transformer would be replaced with a conventional transformer (throat connection would be removed), and the high side oil switch would be removed and replaced with a high side recloser. New ductline and feeder getaway cables would be installed from the new switchgear to each riser pole. Each feeder would be cutover from the existing switchgear to the new switchgear. The conceptual estimate of this plan is $2.960M.

This plan assumes there is sufficient space in the substation yard to allow for the installation of the new switchgear and transformer while maintaining the existing station in service during construction. Because the cost of this plan is significantly higher than

the recommended plan, a real estate review has not been performed to determine if there is sufficient real estate to install the new equipment while the existing station remains in-service. If this alternative plan was to be implemented a full real estate and legal review would be performed

2.2 Investment Recovery

2.2.1 Customer Impact

This project results in an indicative first full year revenue requirement when the asset is placed in service equal to approximately $0.146M. This is indicative only. The actual revenue requirement will differ, depending upon the timing of the next rate case and/or the timing of the next filing in which the project is included in rate base.

3 Related Projects, Scoring, Budgets

3.1 Summary of Projects:

Project Number	Project Type (Elec only)	Project Title	Estimate Amount ($M)
C050758	D-Line	Lee St Substation Retirement	$ 0.950
C051118	D-Sub	Lee St Substation Retirement	$ 0.150
		Total	$ 1.100

3.2 Associated Projects:

N.A.

3.3 Prior Sanctioning History (including relevant approved Strategies):

N.A.

3.4 Category:

Category	Reference to Mandate, Policy, or NPV Assumptions
○ Mandatory ◉ Policy- Driven ○ Justified NPV	This project supports the company's Metalclad Asset Replacement Strategy

3.5 Asset Management Risk Score

Asset Management Risk Score: **41**

Primary Risk Score Driver:

⊙ Reliability ○ Environment ○ Health & Safety ○ Not Policy Driven

3.6 Complexity Level:

○ High Complexity ⊙ Medium Complexity ○ Low Complexity ○ N/A

Complexity Score: **19**

4 Financial

4.1 Business Plan:

Business Plan Name & Period	Project included in approved Business Plan?	Over / Under Business Plan	Project Cost relative to approved Business Plan ($)
Dist – Current 5 year Spending Plan FY14-18 Budget	⊙ Yes ○ No	○ Over ⊙ Under ○ NA	$1.349M

While specific Lee Street metal-clad replacement projects were not included in the business plan, general metal-clad replacement costs are in included in the business plan under Project Funding Number C032583. The values above represent the portion of C032583 associated with Lee Street Substation.

4.1.1 If cost > approved Business Plan how will this be funded?

Re-allocation of funds within the portfolio will be managed by Resource Planning to meet jurisdictional, budgetary, statutory and regulatory requirements.

4.2 CIAC / Reimbursement

N.A.

4.3 Cost Summary Table

Project Number	Project Title	Project Estimate Level (%)	Spend	Prior Yrs	Current Planning Horizon ($M) Yr. 1 2013/14	Yr. 2 2014/15	Yr. 3 2015/16	Yr. 4 2016/17	Yr. 5 2017/18	Yr. 6 + 2018/19	Total
C050758	Lee St Substation Retirement	+/- 25%	CapEx	-	0.010	0.090	0.630	-	-	-	0.730
			OpEx	-	-	-	0.100	-	-	-	0.100
			Removal	-	-	-	0.120	-	-	-	0.120
			Total	-	0.010	0.090	0.850	-	-	-	0.950
C051118	Lee St Substation Retirement	+/- 25%	CapEx	-	-	-	-	-	-	-	-
			OpEx	-	-	-	-	-	-	-	-
			Removal	-	-	0.010	0.140	-	-	-	0.150
			Total	-	-	0.010	0.140	-	-	-	0.150
Total Project Sanction			CapEx	-	0.010	0.090	0.630	-	-	-	0.730
			OpEx	-	-	-	0.100	-	-	-	0.100
			Removal	-	-	0.010	0.260	-	-	-	0.270
			Total	-	0.010	0.100	0.990	-	-	-	1.100

4.4 Project Budget Summary Table

Project Costs per the Business Plan are the portion of costs associated with C032583

Project Costs per Business Plan

	Prior Yrs (Actual)	Current Planning Horizon ($M) Yr. 1 2013/14	Yr. 2 2014/15	Yr. 3 2015/16	Yr. 4 2016/17	Yr. 5 2017/18	Yr. 6 + 2018/19	Total
CapEx	$ -	$ 0.350	$ 1.303	$ 0.600	$ 0.125	$ -	$ -	$ 2.378
OpEx	$ -	$ 0.004	$ 0.013	$ 0.006	$ 0.001	$ -	$ -	$ 0.024
Removal	$ -	$ 0.007	$ 0.026	$ 0.012	$ 0.003	$ -	$ -	$ 0.048
Total Cost in Bus. Plan	$ -	$ 0.361	$ 1.342	$ 0.618	$ 0.129	$ -	$ -	$ 2.449

Variance (Business Plan-Project Estimate)

	Prior Yrs (Actual)	Current Planning Horizon ($M) Yr. 1 2013/14	Yr. 2 2014/15	Yr. 3 2015/16	Yr. 4 2016/17	Yr. 5 2017/18	Yr. 6 + 2018/19	Total
CapEx	$ -	$ 0.340	$ 1.213	$ (0.030)	$ 0.125	$ -	$ -	$ 1.648
OpEx	$ -	$ 0.004	$ 0.013	$ (0.094)	$ 0.001	$ -	$ -	$ (0.076)
Removal	$ -	$ 0.007	$ 0.016	$ (0.248)	$ 0.003	$ -	$ -	$ (0.222)
Total Cost in Bus. Plan	$ -	$ 0.351	$ 1.242	$ (0.372)	$ 0.129	$ -	$ -	$ 1.349

5 Key Milestones:

Milestone	Target Date: (Month/Year)
Start Preliminary Engineering	Dec 2013
Planning Sanction	Aug 2014
Engineering Design Complete	Feb 2015
Project Sanction	Mar 2015
Construction Start	Apr 2015
Construction Complete	Mar 2016
Project Closure Report	Jun 2016

6 Statements of Support

6.1.1 Supporters

Role	Name	Responsibilities
Investment Planning	Glen DiConza	Endorses relative to distribution 5-year plan or emergent work
Resource Planning	Mark Phillips	Endorses Resources, cost estimate, schedule, and Portfolio Alignment
Resource Planning	Jim Patterson	Endorses Resources, cost estimate, schedule, and Portfolio Alignment
Engineering/Design	John Gavin	Endorses Substation scope, design, conformance with design standards
Distribution Asset Management	Alan LaBarre	Endorses scope, design, conformance with design standards
Engineering/Design	Len Swanson	Protection and Telecommunications
Project Management	Tim Moore	Endorses Resources, cost estimate, schedule
Project Management	Sonny Anand	Endorses Resources, cost estimate, schedule

6.1.2 Reviewers

Reviewer List	Name
Finance	Smith, Kim
Regulatory	Katsh, Gideon N
Jurisdictional Delegates	Grimsley, Jennifer L.
Procurement	Curran, Art

7. ***Decisions:***

I:

(a) APPROVE the investment of $0.500M and a tolerance of +/- 10% for Preliminary Engineering.

(b) NOTE the potential investment of $1.100M and a tolerance of +/- 25%, contingent upon submittal and approval of a Project Sanction paper following completion of preliminary engineering.

(c) NOTE that **Marc Bristol** is the Project Manager and has the approved financial delegation to undertake the activities stated in (a).

Signature.....Date....9/27/13

Executive Sponsor – Marie Jordan, Senior Vice President, Network Strategy

8. Other Appendices:

8.1 Sanction Request Breakdown by Project

$M	C050758	C051118	Total
CapEx	$0.49	$0.00	$0.49
OpEx	$0.00	$0.00	$0.00
Removal	$0.00	$0.01	$0.01
Total	$0.49	$0.01	$0.50

8.2 Figures

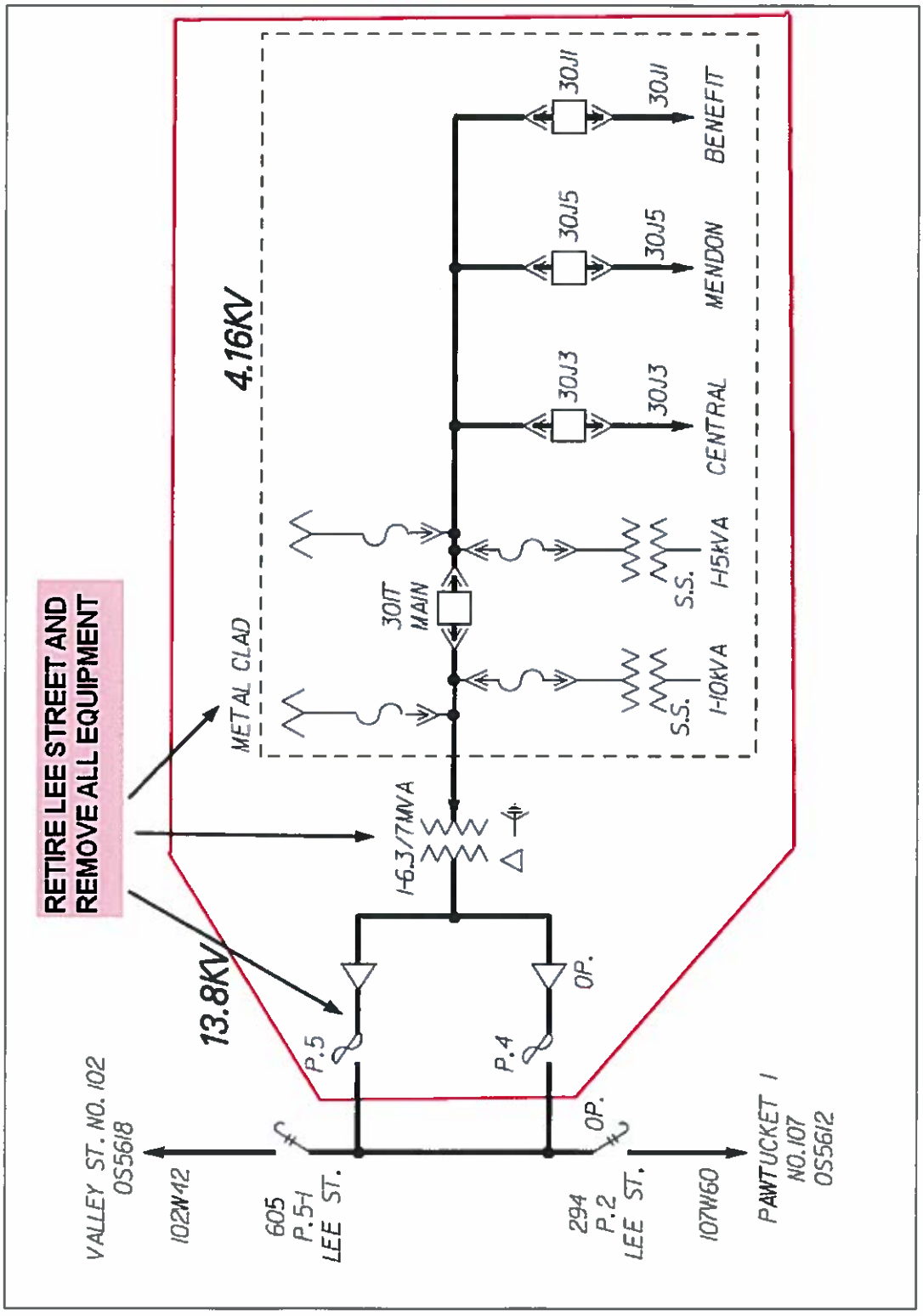

8.2A - LEE STREET SUBSTATION ONE-LINE

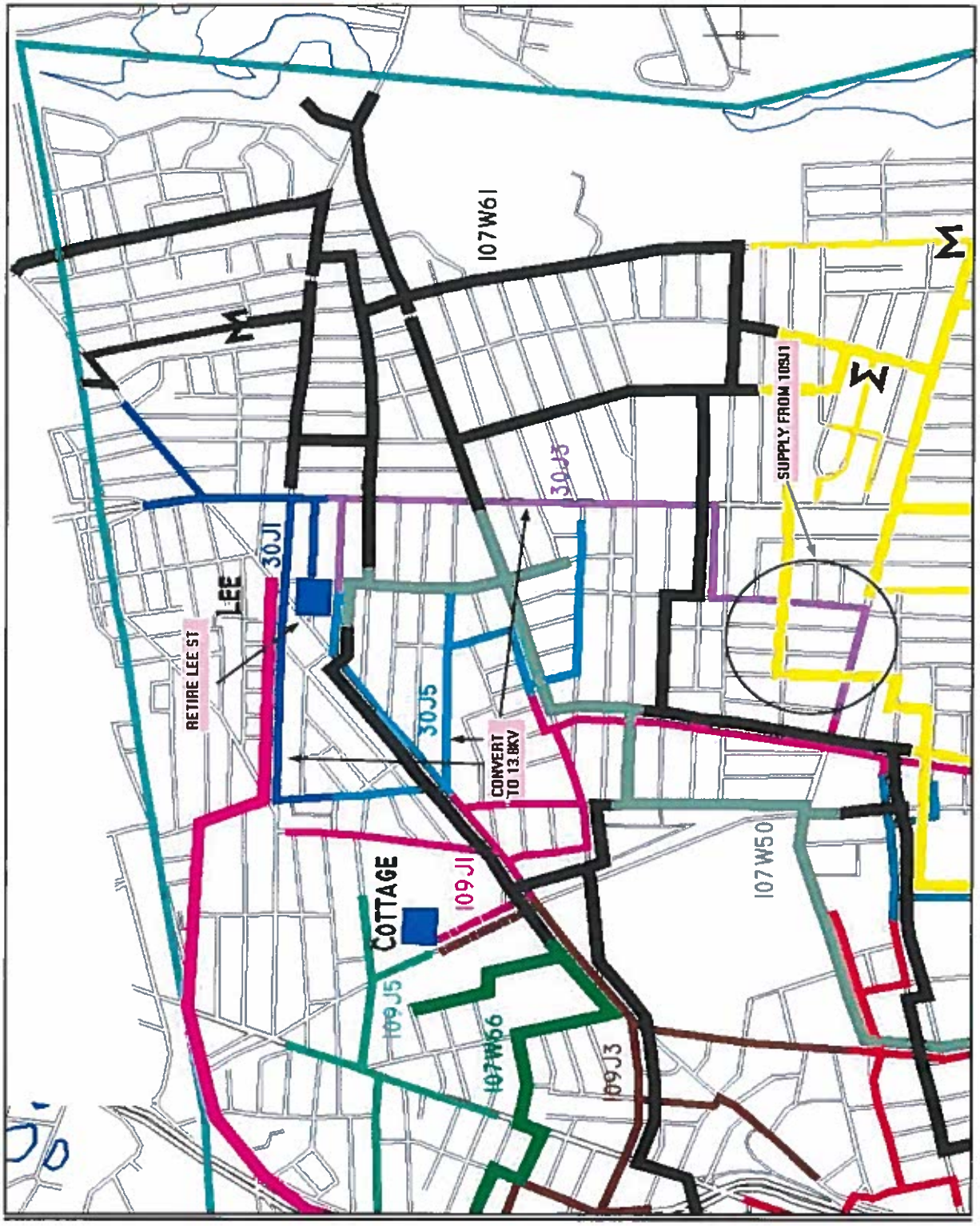

8.2B – EXISTING MAINLINE

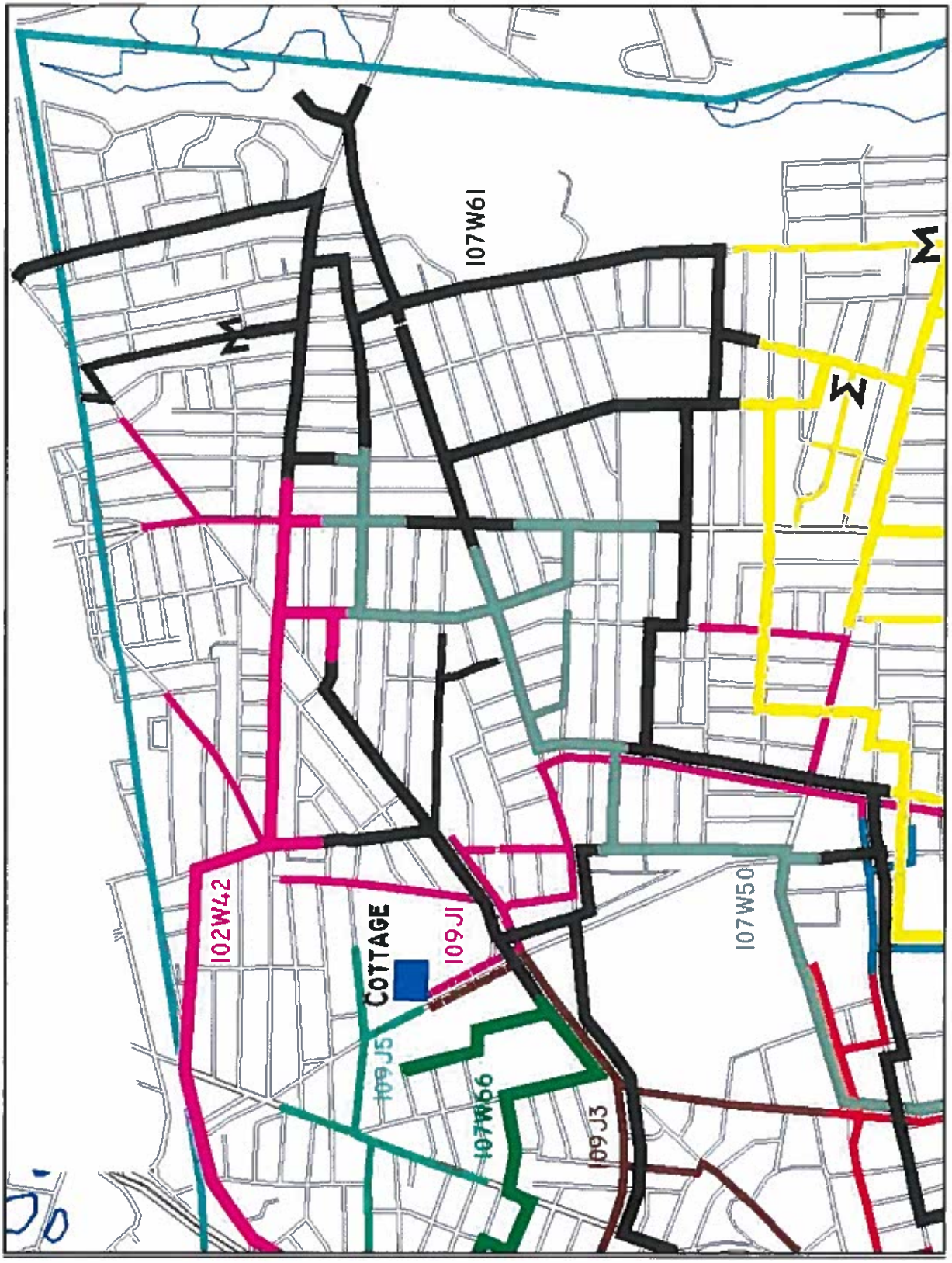

8.2C – PROPOSED MAINLINE



8.2D –LEE STREET SUBSTATION

Short Form Sanction Paper

nationalgrid

Title:	Cottage St Substation Retirement	**Sanction Paper #:**	USSC-13-294
Project #:	C050760, C051126	**Sanction Type:**	Partial Sanction
Operating Company:	The Narragansett Electric Co.	**Date of Request:**	09/24/2013
Author:	Jack P. Vaz	**Sponsor:**	Cheryl A. Warren
Utility Service:	Electricity T&D	**Project Manager:**	Marc Bristol

1 *Executive Summary*

1.1 Sanctioning Summary

This paper requests partial sanction of projects C050760 and C051126 in the amount $0.500M with a tolerance of +/- 10% for the purposes of Engineering, Materials, and initial construction activities.

The sanction amount is $0.500M broken down into:

$0.490M Capex
$0.000M Opex
$0.010M Removal

NOTE the potential investment of $1.280M with a tolerance of +/- 25%, contingent upon submittal and approval of a Project Sanction paper following completion of Engineering.

2 *Project Detail*

2.1 Project Description, Justification, Customer Issues, Drivers and Benefits

Cottage Street is a 13.8/4.16kV substation with a single 7.0 MVA transformer supplying three feeders. It serves approximately 3,400 customers with 6.5 MW of load in the City of Pawtucket. This station is one of eleven 13.8/4.16kV substations in the Pawtucket area. These stations are primarily single metal-clad switchgear modules supplied by a single LTC transformer.

It is difficult to take stations of this type out of service for routine maintenance due to the single transformer nature of the design. The loads on the 4.16kV distribution stations are backed up through the use of feeder ties from adjacent stations. The existing feeder tie capacity is not always sufficient to offload a station to facilitate maintenance. In addition, there is no metering in these stations to accurately determine feeder or station loading making operating these stations even more difficult.

In general, the 4.16kV distribution circuits are installed on the same poles as the 13.8kV distribution circuits in areas where both voltages exist. Many of the 4.16kV transformers are dual voltage transformers and ready for conversion to the 13.8kV system.

The metal-clad switchgear at Cottage Street substation has been identified for replacement in accordance with the Metal-clad Switchgear Strategy. The metal-clad switchgear was manufactured in 1969. The bus insulation is of an inferior design and is prone to failure. These enclosures have a high failure rate and are being removed from the system on a programmatic basis.

The primary driver of this project is asset condition of the metal-clad switchgear. Metal-clad switchgear manufactured prior to the 1970's comprise of paper taped bus insulation that is prone to voids and partial discharge. Additionally, gaskets become deteriorated allowing moisture into the switchgear. Metalclad switchgear of this vintage are equipped with obsolete breakers and are at a higher risk of failure. Addressing these units will reduce the risk of failure and possible customer interruptions while maintaining reliability in the area.

The secondary driver is safety. Metal-clad switchgear of this vintage requires manual racking and due to warped flooring and deterioration of the metal-clad housing, it is difficult to rack breakers in and out for maintenance. In addition, compartment isolation and grounding is difficult. The new and more modern metal-clad switchgear designs have a reliable insulation system that reduces the probability of bus failures. They are manufactured such that arc flash exposure is reduced. They are equipped with remote racking devices, and have the ability to provide proper grounding and isolation for worker safety.

The recommended plan to address the concerns at Cottage Street is to retire the station. The station load will be supplied from the existing area 13.8kV distribution system thru conversions and the use of pole mounted step-down transformers. This is the most economical approach for this area and in-line with the long term plan for this area to continue to expand the 13.8kV distribution system. This project removes all substation equipment from Cottage Street, equipment foundations, substation yard fence and turns the site into a greenfield.

2.1.1 Alternative: Replace the Metal Clad switchgear

This plan would replace the metal-clad switchgear at the station. New ductline and feeder getaway cables would be installed from the new switchgear to each riser pole. Each feeder would be cutover from the existing switchgear to the new switchgear. The conceptual estimate of this plan is $2.100M.

This plan assumes there is sufficient space in the substation yard to allow for the installation of the new switchgear while maintaining the existing switchgear in service during construction. Because the cost of this plan is significantly higher than the

recommended plan, a real estate review has not been performed to determine if there is sufficient real estate to install new equipment while keeping the existing station in-service. If this alternative plan was to be implemented a full real estate and legal review would be performed.

2.2 Investment Recovery

2.2.1 Customer Impact

This project results in an indicative first full year revenue requirement when the asset is placed in service equal to approximately $0.182M. This is indicative only. The actual revenue requirement will differ, depending upon the timing of the next rate case and/or the timing of the next filing in which the project is included in rate base.

3 Related Projects, Scoring, Budgets

3.1 Summary of Projects:

Project Number	Project Type (Elec only)	Project Title	Estimate Amount ($M)
C050760	D-Line	Cottage St Substation Retirement	$ 1.130
C051126	D-Sub	Cottage St Substation Retirement	$ 0.150
		Total	$ 1.280

3.2 Associated Projects:

N.A.

3.3 Prior Sanctioning History (including relevant approved Strategies):

N.A.

3.4 Category:

Category	Reference to Mandate, Policy, or NPV Assumptions
○ Mandatory ◉ Policy- Driven ○ Justified NPV	This project supports the company's Metal-clad Asset Replacement Strategy

3.5 Asset Management Risk Score

Asset Management Risk Score: **41**

Primary Risk Score Driver:

◉ Reliability ○ Environment ○ Health & Safety ○ Not Policy Driven

3.6 Complexity Level:

○ High Complexity ◉ Medium Complexity ○ Low Complexity ○ N/A

Complexity Score: **19**

4 Financial

4.1 Business Plan:

Business Plan Name & Period	Project included in approved Business Plan?	Over / Under Business Plan	Project Cost relative to approved Business Plan ($)
Dist – Current 5 year Spending Plan FY14-18 Budget	◉ Yes ○ No	○ Over ◉ Under ○ NA	$1.169M

NOTE: While specific Cottage Street metal-clad replacement projects were not included in the business plan, general metal-clad replacement costs are included in the business plan under Project Funding Number C032583. The values above represent the portion of C032583 associated with Cottage Street Substation.

4.1.1 If cost > approved Business Plan how will this be funded?

Re-allocation of funds within the portfolio will be managed by Resource Planning to meet jurisdictional, budgetary, statutory and regulatory requirements.

4.2 CIAC / Reimbursement

N.A.

4.3 Cost Summary Table

Project Number	Project Title	Project Estimate Level (%)	Spend	Current Planning Horizon ($M) Yr. 1 2013/14	Yr. 2 2014/15	Yr. 3 2015/16	Total
C050760	Cottage St Substation Retirement	+/- 25%	CapEx	0.010	0.100	0.800	0.910
			OpEx	-	-	0.100	0.100
			Removal	-	-	0.120	0.120
			Total	0.010	0.100	1.020	1.130
C051126	Cottage St Substation Retirement	+/- 25%	CapEx	-	-	-	-
			OpEx	-	-	-	-
			Removal	-	0.010	0.140	0.150
			Total	-	0.010	0.140	0.150
Total Project Sanction			CapEx	0.010	0.100	0.800	0.910
			OpEx	-	-	0.100	0.100
			Removal	-	0.010	0.260	0.270
			Total	0.010	0.110	1.160	1.280

4.4 Project Budget Summary Table

Project Costs per the Business Plan are the portion of costs associated with C032583

Project Costs per Business Plan

	Prior Yrs (Actual)	Current Planning Horizon ($M) Yr. 1 2013/14	Yr. 2 2014/15	Yr. 3 2015/16	Yr. 4 2016/17	Yr. 5 2017/18	Yr. 6 + 2018/19	Total
CapEx	$ -	$ -	$ -	$ 0.350	$ 1.303	$ 0.600	$ 0.125	$ 2.378
OpEx	$ -	$ -	$ -	$ 0.004	$ 0.013	$ 0.006	$ 0.001	$ 0.024
Removal	$ -	$ -	$ -	$ 0.007	$ 0.026	$ 0.012	$ 0.003	$ 0.048
Total Cost in Bus. Plan	$ -	$ -	$ -	$ 0.361	$ 1.342	$ 0.618	$ 0.129	$ 2.449

Variance (Business Plan-Project Estimate)

	Prior Yrs (Actual)	Current Planning Horizon ($M) Yr. 1 2013/14	Yr. 2 2014/15	Yr. 3 2015/16	Yr. 4 2016/17	Yr. 5 2017/18	Yr. 6 + 2018/19	Total
CapEx	$ -	$ (0.010)	$ (0.100)	$ (0.450)	$ 1.303	$ 0.600	$ 0.125	$ 1.468
OpEx	$ -	$ -	$ -	$ (0.097)	$ 0.013	$ 0.006	$ 0.001	$ (0.076)
Removal	$ -	$ -	$ (0.010)	$ (0.253)	$ 0.026	$ 0.012	$ 0.003	$ (0.222)
Total Cost in Bus. Plan	$ -	$ (0.010)	$ (0.110)	$ (0.800)	$ 1.342	$ 0.618	$ 0.129	$ 1.169

5 Key Milestones:

Milestone	Target Date: (Month/Year)
Start Preliminary Engineering - Distribution	Jan 2014
Start Preliminary Engineering - Substation	Apr 2014
Distribution Design Complete	Aug 2014
Substation Engineering Complete	Jan 2015
Project Sanction	Mar 2015
Construction Start	Apr 2015
Construction Complete	Mar 2016
Project Closure Report	Aug 2016

6 Statements of Support

6.1.1 Supporters

Role	Name	Responsibilities
Investment Planning	Glen DiConza	Endorses relative to distribution 5-year plan or emergent work
Resource Planning	Mark Phillips	Endorses Resources, cost estimate, schedule, and Portfolio Alignment
Resource Planning	Jim Patterson	Endorses Resources, cost estimate, schedule, and Portfolio Alignment
Engineering/Design	John Gavin	Endorses Substation scope, design, conformance with design standards
Distribution Asset Management	Alan LaBarre	Endorses scope, design, conformance with design standards
Engineering/Design	Len Swanson	Protection and Telecommunications
Project Management	Tim Moore	Endorses Resources, cost estimate, schedule
Project Management	Sonny Anand	Endorses Resources, cost estimate, schedule

6.1.2 Reviewers

Reviewer List	Name
Finance	Smith, Kim
Regulatory	Katsh, Gideon N
Jurisdictional Delegates	Grimsley, Jennifer L.
Procurement	Curran, Art

7. ***Decisions:***

(a) APPROVE the investment of $0.500M and a tolerance of +/- 10% for Engineering, Materials, and initial construction activities.

(b) NOTE the potential investment of $1.280M and a tolerance of +/- 25%, contingent upon submittal and approval of a Project Sanction paper following completion of engineering.

(c) NOTE that **Marc Bristol** is the Project Manager and has the approved financial delegation to undertake the activities stated in (a).

Signature.....Date.....10/7/2013

Executive Sponsor – Marie Jordan, SVP Network Strategy

8. Other Appendices:

8.1 Sanction Request Breakdown by Project

$M	C050760	C051126	Total
CapEx	$0.49	$0.00	$0.49
OpEx	$0.00	$0.00	$0.00
Removal	$0.00	$0.01	$0.01
Total	$0.49	$0.01	$0.50

8.2 Figures

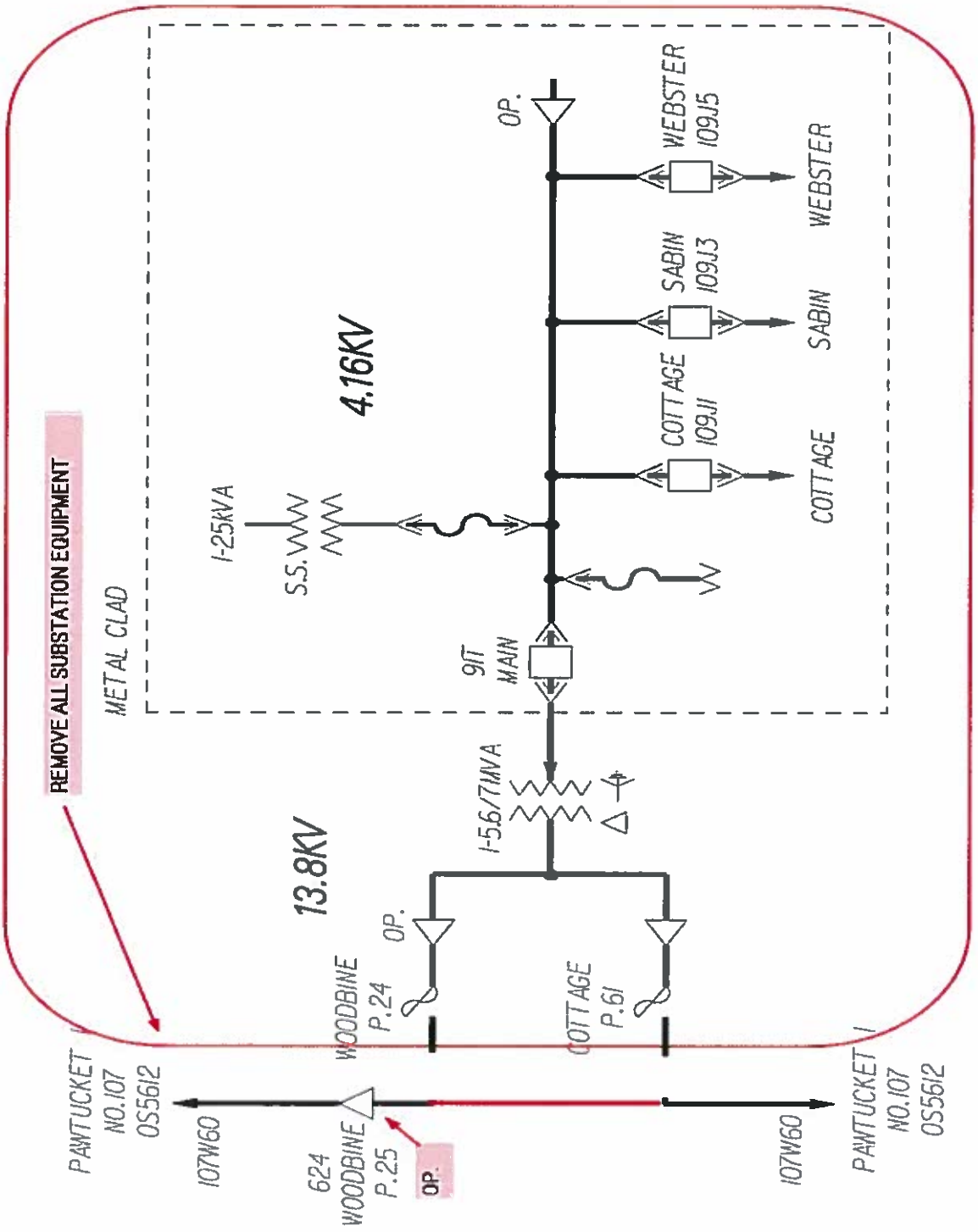

8.2A - COTTAGE STREET SUBSTATION ONE-LINE

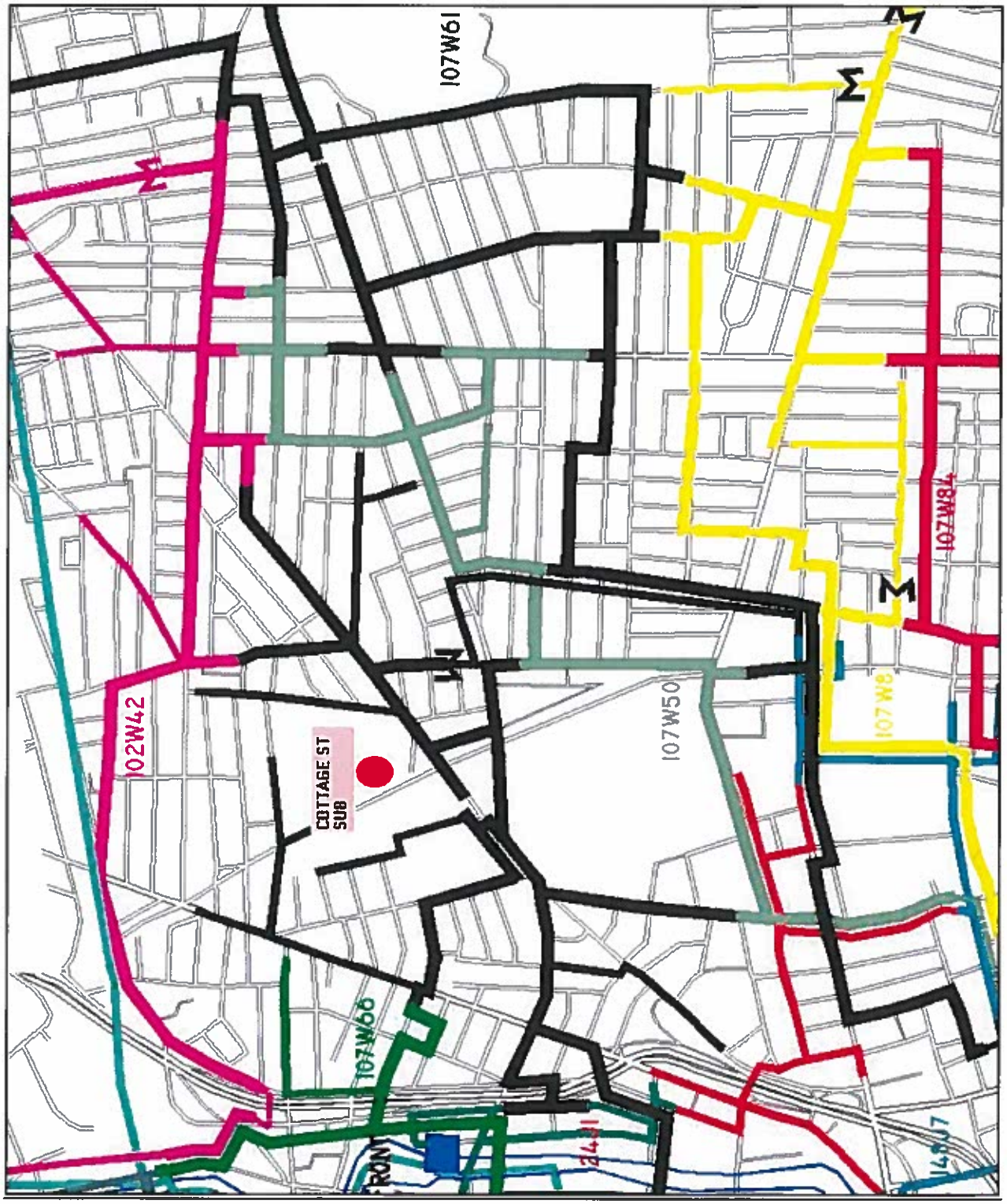

8.2B – PROPOSED MAINLINE

Short Form Sanction Paper

nationalgrid

Title:	IRURD Stone Ridge Acres Phase 2	**Sanction Paper #:**	USSC-13-317
Project #:	C049462	**Sanction Type:**	Partial Sanction
Operating Company:	The Narragansett Electric Co.	**Date of Request:**	11/19/2013
Author:	John Cerulli	**Sponsor:**	Cheryl A. Warren
Utility Service:	Electricity T&D	**Project Manager:**	Jim Patterson

1 Executive Summary

1.1 Sanctioning Summary

This paper requests partial sanction of project C049462 in the amount $0.900M with a tolerance of +/- 10% for the purposes of engineering, material purchase and initial construction activities including cable insulation injection.

The sanction amount is $0.900M broken down into:

$0.700M Capex
$0.100M Opex
$0.100M Removal

NOTE the potential investment of $1.900M with a tolerance of +/- 25%, contingent upon submittal and approval of a Project Sanction paper following completion of Engineering and Injection.

2 Project Detail

2.1 Project Description, Justification, Customer Issues, Drivers and Benefits

Stone Ridge Acres URD in East Greenwich, Rhode Island has received four outages in three years and is a candidate for injection or replacement based on the URD/UCD Primary Cable Strategy.

This project would install 1400' of new URD cable to create loops that enable injection without customer outages, inject 29,000' of cable and replace cable that could not be injected. Work includes injection of the attached Signal Ridge URD. See attached one-line and GIS sketch.

2.1.1 Alternatives:

Alternative 1:

Complete replacement was estimated at $6.0M.

2.2 Investment Recovery

2.2.1 Customer Impact

This project results in an indicative first full year revenue requirement when the asset is placed in service equal to approximately $0.312M. This is indicative only. The actual revenue requirement will differ, depending upon the timing of the next rate case and/or the timing of the next filing in which the project is included in rate base.

3 Related Projects, Scoring, Budgets

3.1 Summary of Projects:

Project Number	Project Type (Elec only)	Project Title	Estimate Amount ($M)
C049462	Distribution Line	IRURD Stone Ridge Acres Phase 2	$ 1.900
		Total	$ 1.900

3.2 Associated Projects:

Project Number	Project Title	Estimate Amount
	Total	$ -

3.3 Prior Sanctioning History (including relevant approved Strategies):

Date	Governance Body	Sanctioned Amount	Paper Title	Sanction Type
5/16/13	Powerplant	0.100	None	Preliminary Engineering

3.4 Category:

Category	Reference to Mandate, Policy, or NPV Assumptions
O Mandatory ⊙ Policy- Driven O Justified NPV	URD/UCD Primary Cable Strategy

3.5 Asset Management Risk Score

Asset Management Risk Score: 36

Primary Risk Score Driver: (Policy Driven Projects Only)

⊙ Reliability O Environment O Health & Safety O Not Policy Driven

3.6 Complexity Level:

O High Complexity O Medium Complexity ⊙ Low Complexity O N/A

Complexity Score: 17

4 *Financial*

4.1 Business Plan:

Business Plan Name & Period	Project included in approved Business Plan?	Over / Under Business Plan	Project Cost relative to approved Business Plan ($)
FY15 - FY19 New England Distribution and Sub-transmission Electricity Business Plan	⊙ Yes ○ No	⊙ Over ○ Under ○ NA	1.791M

4.1.1 If cost > approved Business Plan how will this be funded?

Re-allocation of funds within the portfolio will be managed by Resource Planning to meet jurisdictional budgetary, statutory and regulatory requirements.

4.2 CIAC / Reimbursement

$M	Prior Yrs	Yr. 1 2013/14	Yr. 2 2014/15	Yr. 3 2015/16	Yr. 4 2016/17	Yr. 5 2017/18	Yr. 6 + 2018/19	Total
CIAC/Reimbursement	$ -	$ -	$ -	$ -	$ -	$ -	$ -	$ -

4.3 Cost Summary Table

Project Number	Project Title	Project Estimate Level (%)	Spend	Prior Yrs	Current Planning Horizon ($M) Yr. 1 2013/14	Yr. 2 2014/15	Yr. 3 2015/16	Yr. 4 2016/17	Yr. 5 2017/18	Yr. 6 + 2018/19	Total
C049462	IRURD Stone Ridge Acres Phase 2	Est Lvl (e.g. +/- 10%)	CapEx	-	-	0.200	0.500	0.800	-	-	1.500
			OpEx	-	-	0.050	0.050	0.100	-	-	0.200
			Removal	-	-	0.050	0.050	0.100	-	-	0.200
			Total	-	-	0.300	0.600	1.000	-	-	1.900
Total Project Sanction			CapEx	-	-	0.200	0.500	0.800	-	-	1.500
			OpEx	-	-	0.050	0.050	0.100	-	-	0.200
			Removal	-	-	0.050	0.050	0.100	-	-	0.200
			Total	-	-	0.300	0.600	1.000	-	-	1.900

4.4 Project Budget Summary Table

Project Costs per Business Plan

		Current Planning Horizon ($M)						
	Prior Yrs (Actual)	Yr. 1 2013/14	Yr. 2 2014/15	Yr. 3 2015/16	Yr. 4 2016/17	Yr. 5 2017/18	Yr. 6 + 2018/19	Total
CapEx	$ -	$ -	$ 0.043	$ -	$ 0.043	$ -	$ -	$ 0.086
OpEx	$ -	$ -	$ 0.006	$ -	$ 0.006	$ -	$ -	$ 0.013
Removal	$ -	$ -	$ 0.005	$ -	$ 0.005	$ -	$ -	$ 0.010
Total Cost in Bus. Plan	$ -	$ -	$ 0.055	$ -	$ 0.055	$ -	$ -	$ 0.109

Variance (Business Plan-Project Estimate)

		Current Planning Horizon ($M)						
	Prior Yrs (Actual)	Yr. 1 2013/14	Yr. 2 2014/15	Yr. 3 2015/16	Yr. 4 2016/17	Yr. 5 2017/18	Yr. 6 + 2018/19	Total
CapEx	$ -	$ -	$ (0.157)	$ (0.500)	$ (0.757)	$ -	$ -	$ (1.414)
OpEx	$ -	$ -	$ (0.044)	$ (0.050)	$ (0.094)	$ -	$ -	$ (0.187)
Removal	$ -	$ -	$ (0.045)	$ (0.050)	$ (0.095)	$ -	$ -	$ (0.190)
Total Cost in Bus. Plan	$ -	$ -	$ (0.245)	$ (0.600)	$ (0.945)	$ -	$ -	$ (1.791)

5 ***Key Milestones:***

Milestone	**Target Date: (Month/Year)**
Make Ready Design Complete	6/14
Make Ready Construction Complete	12/14
Injection Design Complete	3/15
Injection Complete	9/15
Replacement Design Complete	3/16
Replacement Construction Complete	3/17
Closure	6/17

6 Statements of Support

6.1.1 Supporters

Role	Name	Responsibilities
Investment Planning	Glen DiConza	Endorses relative to distribution 5-year plan or emergent work
Resource Planning	Jim Patterson	Endorses Resources, cost estimate, schedule, and Portfolio Alignment
Distribution Asset Management	Alan LaBarre	Endorses scope, design, conformance with design standards
Project Management	Tim Moore	Endorses Resources, cost estimate, schedule

6.1.2 Reviewers

Reviewers read the paper for content / language and recommends edits if necessary.

Reviewer List	Name
Finance	Fowler, Keith
Regulatory	Katsh, Gideon N.
Jurisdictional Delegates	Grimsley, Jenifer L.
Procurement	Curran, Art
Control Center	Gallagher, Mike

7. ***Decisions:***

I:

(a) APPROVE the investment of $0.900M and a tolerance of +/- 10 % for engineering, material purchase and initial construction activities including cable insulation injection.

(b) NOTE the potential investment of $1.900M and a tolerance of +/- 25%, contingent upon submittal and approval of a Project Sanction paper following completion of final engineering and design.

(c) NOTE that Jim Patterson is the Project Manager and has the approved financial delegation to undertake the activities stated in (a).

Signature.....Date.....12/3/13..

Executive Sponsor – Marie Jordan, Senior Vice President, Network Strategy

8. Other Appendices:

8.1 Sanction Request Breakdown by Project (Partial Sanction only)

$M	C049462	Total
CapEx	$0.70	$0.70
OpEx	$0.10	$0.10
Removal	$0.10	$0.10
Total	$0.90	$0.90

8.2 URD One-line

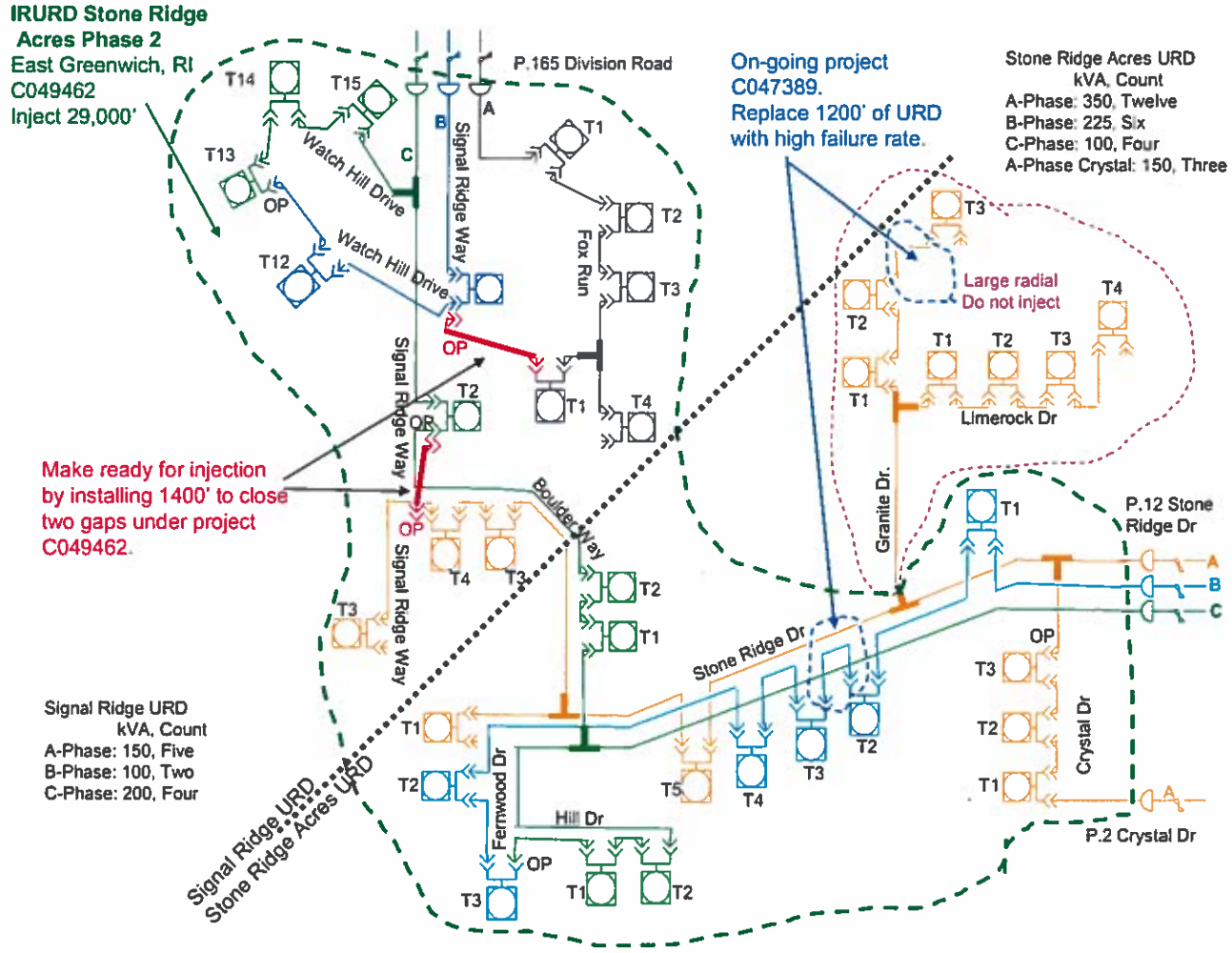

8.3 URD GIS Print

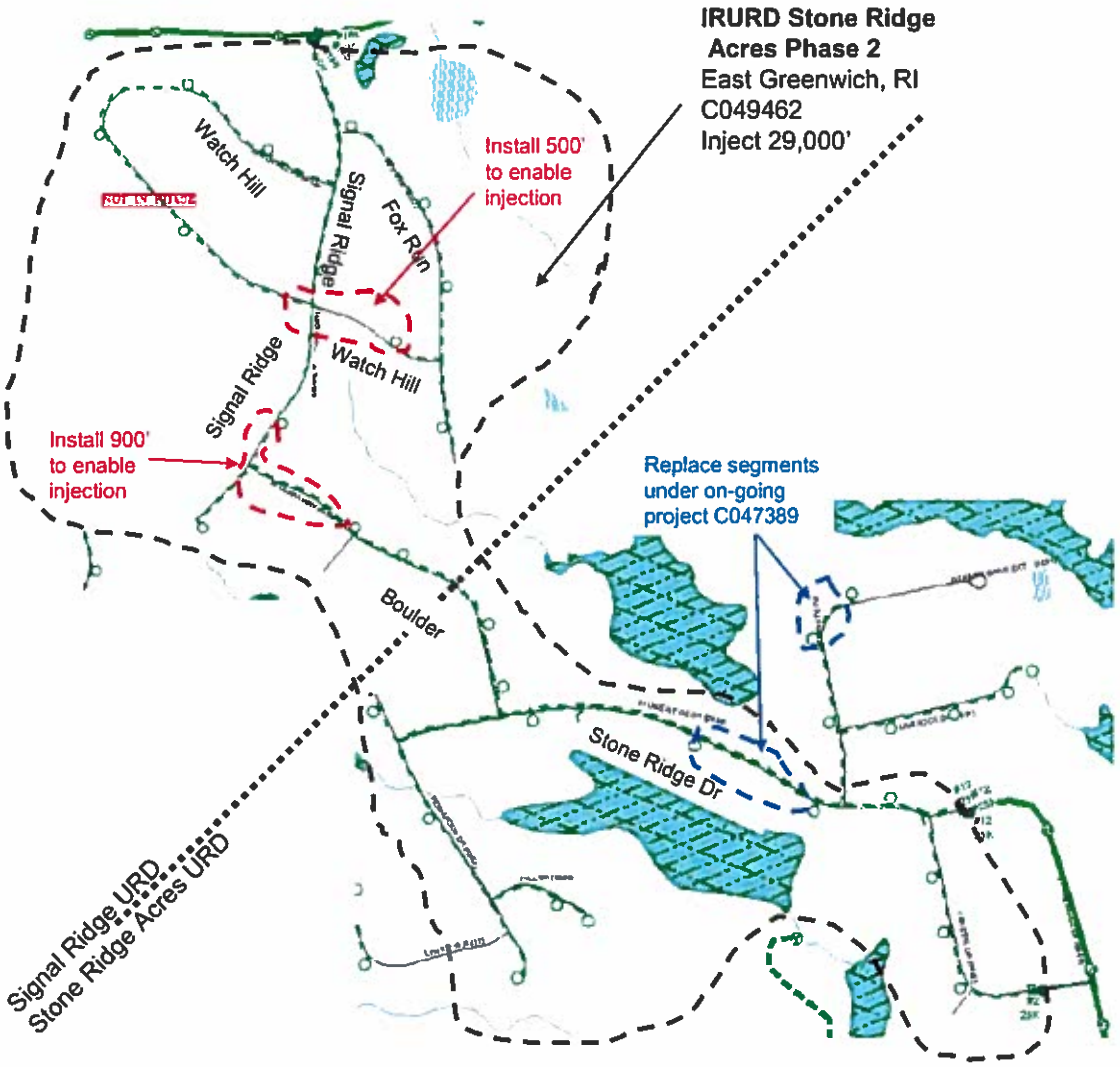

Short Form Sanction Paper

nationalgrid

Title:	IRURD Silver Maple Phase 2	**Sanction Paper #:**	USSC-13-318
Project #:	C049356	**Sanction Type:**	Partial Sanction
Operating Company:	The Narragansett Electric Co.	**Date of Request:**	11/19/2013
Author:	John Cerulli	**Sponsor:**	Cheryl A. Warren
Utility Service:	Electricity T&D	**Project Manager:**	Jim Patterson

1 *Executive Summary*

1.1 Sanctioning Summary

This paper requests partial sanction of project C049356 in the amount $0.400M with a tolerance of +/- 10% for the purposes of engineering, material purchase and initial construction activities including cable insulation injection.

The sanction amount is $0.400M broken down into:

$0.300M Capex
$0.050M Opex
$0.050M Removal

NOTE the potential investment of $1.100M with a tolerance of +/- 25%, contingent upon submittal and approval of a Project Sanction paper following completion of Engineering and Injection.

2 *Project Detail*

2.1 Project Description, Justification, Customer Issues, Drivers and Benefits

Silver Maple Drive URD in Coventry, Rhode Island has received three outages in three years and is a candidate for injection or replacement based on the URD/UCD Primary Cable Strategy.

This project would install 500' of new URD cable to create loops that enable injection without customer outages, inject 15,500' of cable and replace cable that could not be injected. See attached one-line and GIS sketch.

2.1.1 Alternatives*:*

Alternative 1:

Complete replacement was estimated at $3.1M.

2.2 Investment Recovery

2.2.1 Customer Impact

This project results in an indicative first full year revenue requirement when the asset is placed in service equal to approximately $0.164M. This is indicative only. The actual revenue requirement will differ, depending upon the timing of the next rate case and/or the timing of the next filing in which the project is included in rate base.

3 Related Projects, Scoring, Budgets

3.1 Summary of Projects:

Project Number	Project Type (Elec only)	Project Title	Estimate Amount ($M)
C049356	Distribution Line	IRURD Silver Maple Phase 2	$ 1.100
		Total	$ 1.100

3.2 Associated Projects:

Project Number	Project Title	Estimate Amount
	Total	$ -

3.3 Prior Sanctioning History (including relevant approved Strategies):

Date	Governance Body	Sanctioned Amount	Paper Title	Sanction Type
5/16/13	Powerplant	0.100	None	Preliminary Engineering

3.4 Category:

Category	Reference to Mandate, Policy, or NPV Assumptions
O Mandatory ⊙ Policy- Driven O Justified NPV	URD/UCD Primary Cable Strategy

3.5 Asset Management Risk Score

Asset Management Risk Score: 36

Primary Risk Score Driver: (Policy Driven Projects Only)

⊙ Reliability O Environment O Health & Safety O Not Policy Driven

3.6 Complexity Level:

O High Complexity O Medium Complexity ⊙ Low Complexity O N/A

Complexity Score: 17

REDACTED

4 *Financial*

4.1 Business Plan:

Business Plan Name & Period	Project included in approved Business Plan?	Over / Under Business Plan	Project Cost relative to approved Business Plan ($)
FY15 - FY19 New England Distribution and Sub-transmission Electricity Business Plan	◉ Yes ○ No	◉ Over ○ Under ○ NA	1.045M

4.1.1 If cost > approved Business Plan how will this be funded?

Re-allocation of funds within the portfolio will be managed by Resource Planning to meet jurisdictional budgetary, statutory and regulatory requirements.

4.2 CIAC / Reimbursement

$M	Prior Yrs	Yr. 1 2013/14	Yr. 2 2014/15	Yr. 3 2015/16	Yr. 4 2016/17	Yr. 5 2017/18	Yr. 6 + 2018/19	Total
CIAC/Reimbursement	$ -	$ -	$ -	$ -	$ -	$ -	$ -	$ -

4.3 Cost Summary Table

Project Number	Project Title	Project Estimate Level (%)	Spend	Prior Yrs	Current Planning Horizon ($M) Yr. 1 2013/14	Yr. 2 2014/15	Yr. 3 2015/16	Yr. 4 2016/17	Yr. 5 2017/18	Yr. 6 + 2018/19	Total
C049356	IRURD Silver Maple Phase 2	Est Lvl (e.g. +/- 10%)	CapEx	-	-	0.100	0.200	0.600	-	-	0.900
			OpEx	-	-	-	0.050	0.050	-	-	0.100
			Removal	-	-	-	0.050	0.050	-	-	0.100
			Total	-	-	0.100	0.300	0.700	-	-	1.100
Total Project Sanction			CapEx	-	-	0.100	0.200	0.600	-	-	0.900
			OpEx	-	-	-	0.050	0.050	-	-	0.100
			Removal	-	-	-	0.050	0.050	-	-	0.100
			Total	-	-	0.100	0.300	0.700	-	-	1.100

4.4 Project Budget Summary Table

Project Costs per Business Plan

		Current Planning Horizon ($M)						
	Prior Yrs (Actual)	Yr. 1 2013/14	Yr. 2 2014/15	Yr. 3 2015/16	Yr. 4 2016/17	Yr. 5 2017/18	Yr. 6 + 2018/19	Total
CapEx	$ -	$ -	$ 0.043	$ -	$ -	$ -	$ -	$ 0.043
OpEx	$ -	$ -	$ 0.006	$ -	$ -	$ -	$ -	$ 0.006
Removal	$ -	$ -	$ 0.005	$ -	$ -	$ -	$ -	$ 0.005
Total Cost in Bus. Plan	$ -	$ -	$ 0.055	$ -	$ -	$ -	$ -	$ 0.055

Variance (Business Plan-Project Estimate)

		Current Planning Horizon ($M)						
	Prior Yrs (Actual)	Yr. 1 2013/14	Yr. 2 2014/15	Yr. 3 2015/16	Yr. 4 2016/17	Yr. 5 2017/18	Yr. 6 + 2018/19	Total
CapEx	$ -	$ -	$ (0.057)	$ (0.200)	$ (0.600)	$ -	$ -	$ (0.857)
OpEx	$ -	$ -	$ 0.006	$ (0.050)	$ (0.050)	$ -	$ -	$ (0.094)
Removal	$ -	$ -	$ 0.005	$ (0.050)	$ (0.050)	$ -	$ -	$ (0.095)
Total Cost in Bus. Plan	$ -	$ -	$ (0.045)	$ (0.300)	$ (0.700)	$ -	$ -	$ (1.045)

5 ***Key Milestones:***

Milestone	**Target Date: (Month/Year)**
Make Ready Design Complete	6/14
Make Ready Construction Complete	12/14
Injection Design Complete	3/15
Injection Complete	9/15
Replacement Design Complete	3/16
Replacement Construction Complete	3/17
Closure	6/17

6 Statements of Support

6.1.1 Supporters

Role	Name	Responsibilities
Investment Planning	Glen DiConza	Endorses relative to distribution 5-year plan or emergent work
Resource Planning	Jim Patterson	Endorses Resources, cost estimate, schedule, and Portfolio Alignment
Distribution Asset Management	Alan LaBarre	Endorses scope, design, conformance with design standards
Project Management	Tim Moore	Endorses Resources, cost estimate, schedule

6.1.2 Reviewers

Reviewers read the paper for content / language and recommends edits if necessary.

Reviewer List	Name
Finance	Fowler, Keith
Regulatory	Katsh, Gideon N.
Jurisdictional Delegates	Grimsley, Jenifer L.
Procurement	Curran, Art
Control Center	Gallagher, Mike

7. ***Decisions:***

I:

(a) APPROVE the investment of $0.400M and a tolerance of +/- 10 % for engineering, material purchase and initial construction activities including cable insulation injection.

(b) NOTE the potential investment of $1.100M and a tolerance of +/- 25%, contingent upon submittal and approval of a Project Sanction paper following completion of final engineering and design.

(c) NOTE that Jim Patterson is the Project Manager and has the approved financial delegation to undertake the activities stated in (a).

Signature.....Date.....10/3/13.....

Executive Sponsor – Marie Jordan, Senior Vice President, Network Strategy

8. Other Appendices:

8.1 Sanction Request Breakdown by Project (Partial Sanction only)

$M	C049356	Total
CapEx	$0.30	$0.30
OpEx	$0.05	$0.05
Removal	$0.05	$0.05
Total	$0.40	$0.40

8.2 URD One-line

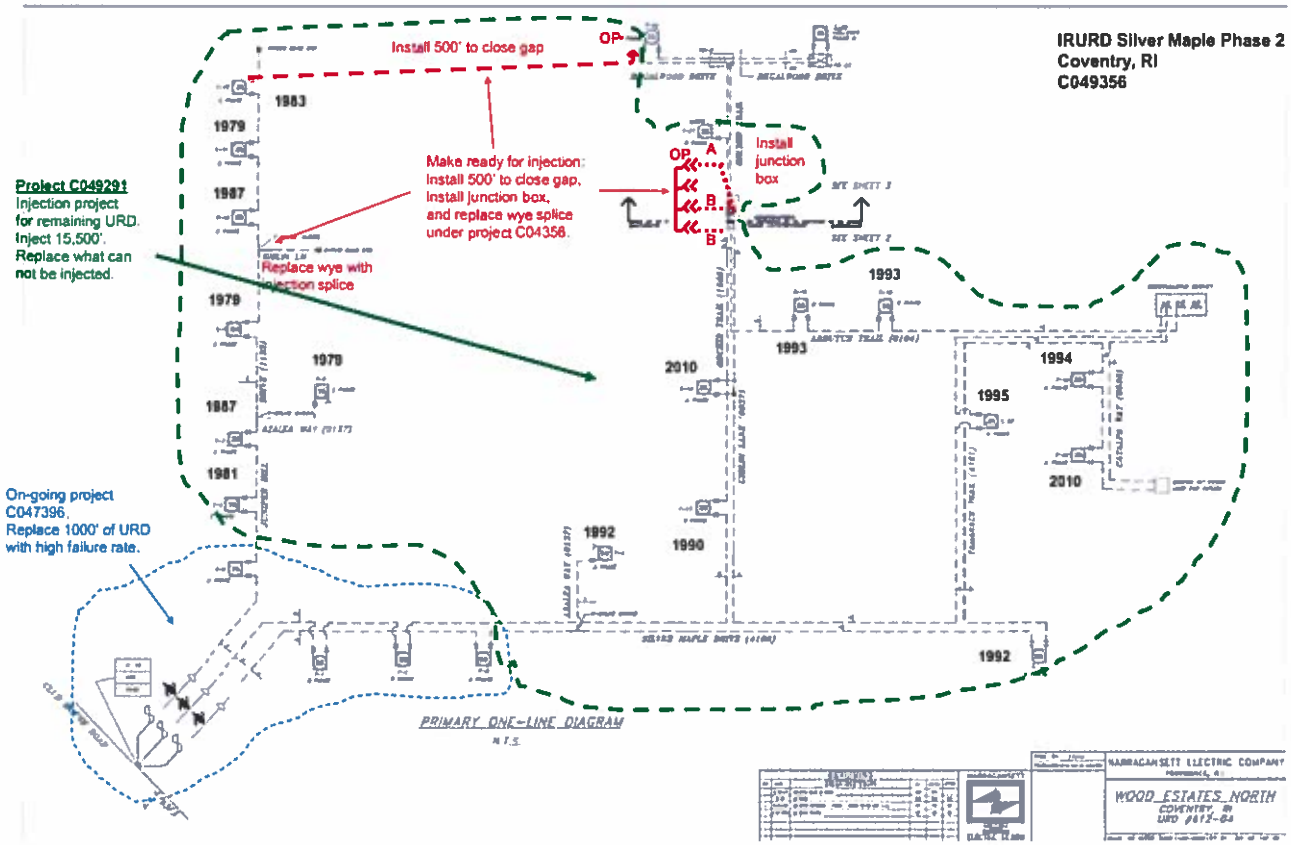

8.3 URD GIS Print

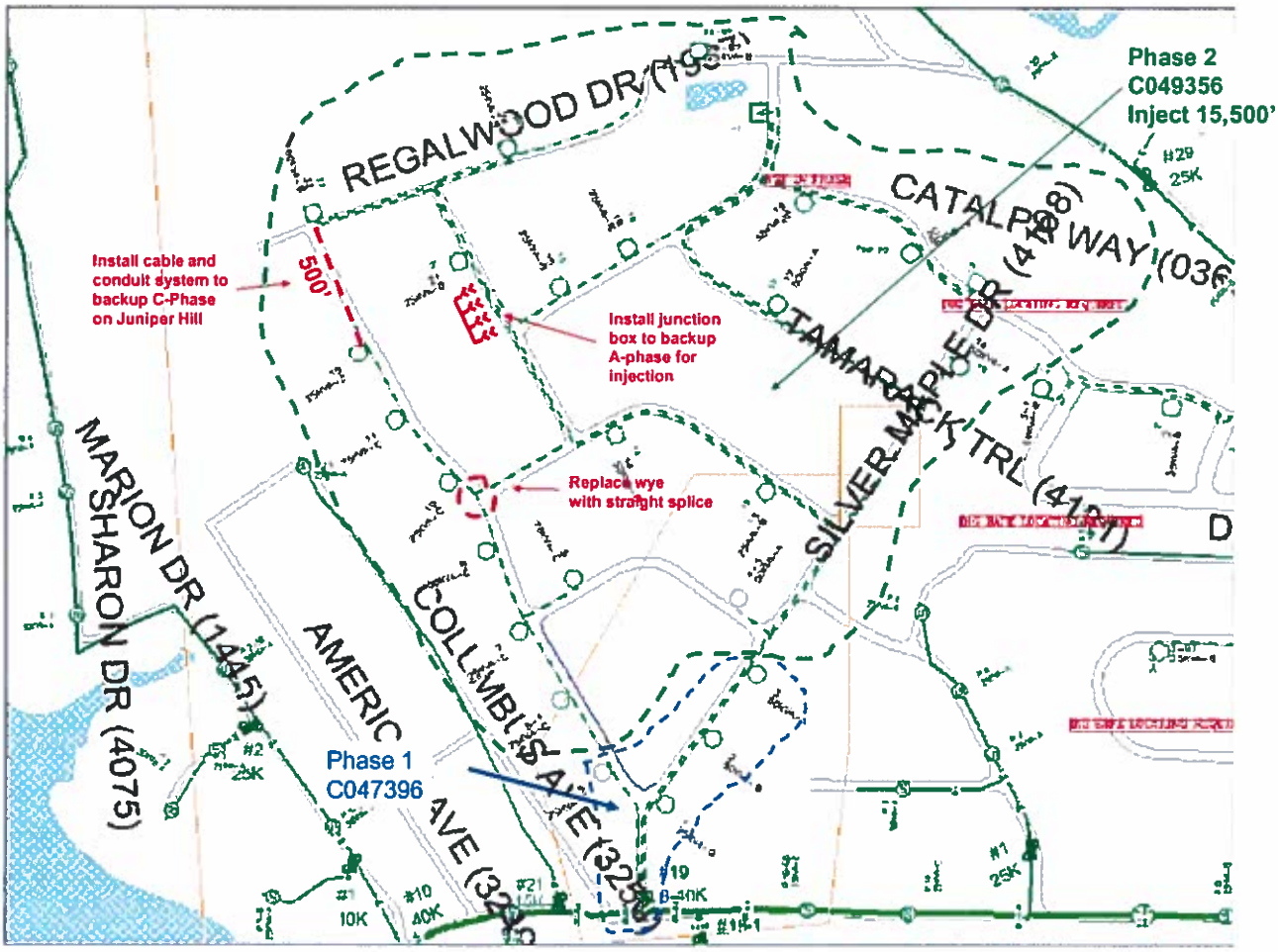

REDACTED

Short Form Sanction Paper

nationalgrid

Title:	IRURD High Hawk	**Sanction Paper #:**	USSC-13-323
Project #:	C047829	**Sanction Type:**	Partial Sanction
Operating Company:	The Narragansett Electric Co.	**Date of Request:**	11/19/2013
Author:	John Cerulli	**Sponsor:**	Cheryl A. Warren
Utility Service:	Electricity T&D	**Project Manager:**	Jim Patterson

1 *Executive Summary*

1.1 Sanctioning Summary

This paper requests partial sanction of project C047829 in the amount $0.600M with a tolerance of +/- 10% for the purposes of engineering, material purchase and initial construction activities including cable insulation injection.

The sanction amount is $0.600M broken down into:

- $0.500M Capex
- $0.050M Opex
- $0.050M Removal

NOTE the potential investment of $1.200M with a tolerance of +/- 25%, contingent upon submittal and approval of a Project Sanction paper following completion of Engineering and Civil Construction.

2 *Project Detail*

2.1 Project Description, Justification, Customer Issues, Drivers and Benefits

High Hawk URD in East Greenwich, Rhode Island is a candidate for proactive injection as part of the URD/UCD Primary Cable Strategy. URD was also recommended as a candidate by Operations due to having four outages in three years between 2007 and 2009 and long radial configuration on two of three phases. This proactive project may be deferred to a later date if a reactive project that addresses known outages becomes ready for construction.

Two of three phases at High Hawks URD are radial. This project would install a junction box to enable injection on all three phases, inject 24,300' of cable, and replace cable that can not be injected. See attached one-line and GIS sketch.

2.1.1 Alternatives:

Alternative 1:

Complete replacement was estimated at $4.86M.

2.2 Investment Recovery

2.2.1 Customer Impact

This project results in an indicative first full year revenue requirement when the asset is placed in service equal to approximately $0.200M. This is indicative only. The actual revenue requirement will differ, depending upon the timing of the next rate case and/or the timing of the next filing in which the project is included in rate base.

3 *Related Projects, Scoring, Budgets*

3.1 Summary of Projects:

Project Number	Project Type (Elec only)	Project Title	Estimate Amount ($M)	
C047829	Distribution Line	IRURD High Hawk	$	1.200
		Total	$	1.200

3.2 Associated Projects:

Project Number	Project Title	Estimate Amount	
	Total	$	-

3.3 Prior Sanctioning History (including relevant approved Strategies):

Date	Governance Body	Sanctioned Amount	Paper Title	Sanction Type
1/31/13	Powerplant	0.550	None	Partial

3.4 Category:

Category	Reference to Mandate, Policy, or NPV Assumptions
O Mandatory ⊙ Policy- Driven O Justified NPV	URD/UCD Primary Cable Strategy

3.5 Asset Management Risk Score

Asset Management Risk Score: 36

Primary Risk Score Driver: (Policy Driven Projects Only)

⊙ Reliability O Environment O Health & Safety O Not Policy Driven

3.6 Complexity Level:

O High Complexity O Medium Complexity ⊙ Low Complexity O N/A

Complexity Score: 17

4 *Financial*

4.1 Business Plan:

Business Plan Name & Period	Project included in approved Business Plan?	Over / Under Business Plan	Project Cost relative to approved Business Plan ($)
FY15 - FY19 New England Distribution and Sub-transmission Electricity Business Plan	⊙ Yes ○ No	⊙ Over ○ Under ○ NA	0.209M

4.1.1 If cost > approved Business Plan how will this be funded?

Re-allocation of funds within the portfolio will be managed by Resource Planning to meet jurisdictional budgetary, statutory and regulatory requirements.

4.2 CIAC / Reimbursement

$M	Prior Yrs	Yr. 1 2013/14	Yr. 2 2014/15	Yr. 3 2015/16	Yr. 4 2016/17	Yr. 5 2017/18	Yr. 6 + 2018/19	Total
CIAC/Reimbursement	$ -	$ -	$ -	$ -	$ -	$ -	$ -	$ -

4.3 Cost Summary Table

Project Number	Project Title	Project Estimate Level (%)	Spend	Prior Yrs	Current Planning Horizon ($M) Yr. 1 2013/14	Yr. 2 2014/15	Yr. 3 2015/16	Yr. 4 2016/17	Yr. 5 2017/18	Yr. 6 + 2018/19	Total
C047829	IRURD High Hawk	Est Lvl (e.g. +/- 10%)	CapEx	-	-	0.050	0.450	0.500	-	-	1.000
			OpEx	-	-	-	0.050	0.050	-	-	0.100
			Removal	-	-	-	0.050	0.050	-	-	0.100
			Total	-	-	0.050	0.550	0.600	-	-	1.200
Total Project Sanction			CapEx	-	-	0.050	0.450	0.500	-	-	1.000
			OpEx	-	-	-	0.050	0.050	-	-	0.100
			Removal	-	-	-	0.050	0.050	-	-	0.100
			Total	-	-	0.050	0.550	0.600	-	-	1.200

4.4 Project Budget Summary Table

Project Costs per Business Plan

		Current Planning Horizon ($M)						
	Prior Yrs (Actual)	Yr. 1 2013/14	Yr. 2 2014/15	Yr. 3 2015/16	Yr. 4 2016/17	Yr. 5 2017/18	Yr. 6 + 2018/19	Total
CapEx	$ -	$ -	$ 0.043	$ 0.680	$ -	$ -	$ -	$ 0.723
OpEx	$ -	$ -	$ 0.011	$ 0.170	$ -	$ -	$ -	$ 0.181
Removal	$ -	$ -	$ 0.005	$ 0.082	$ -	$ -	$ -	$ 0.087
Total Cost in Bus. Plan	$ -	$ -	$ 0.059	$ 0.932	$ -	$ -	$ -	$ 0.991

Variance (Business Plan-Project Estimate)

		Current Planning Horizon ($M)						
	Prior Yrs (Actual)	Yr. 1 2013/14	Yr. 2 2014/15	Yr. 3 2015/16	Yr. 4 2016/17	Yr. 5 2017/18	Yr. 6 + 2018/19	Total
CapEx	$ -	$ -	$ (0.007)	$ 0.230	$ (0.500)	$ -	$ -	$ (0.277)
OpEx	$ -	$ -	$ 0.011	$ 0.120	$ (0.050)	$ -	$ -	$ 0.081
Removal	$ -	$ -	$ 0.005	$ 0.032	$ (0.050)	$ -	$ -	$ (0.013)
Total Cost in Bus. Plan	$ -	$ -	$ 0.009	$ 0.382	$ (0.600)	$ -	$ -	$ (0.209)

5 Key Milestones:

Milestone	Target Date: (Month/Year)
Make Ready Design Complete	6/14
Make Ready Construction Complete	3/15
Injection Design Complete	3/15
Injection Complete	9/15
Replacement Design Complete	3/16
Replacement Construction Complete	3/17
Closure	6/17

6 *Statements of Support*

6.1.1 Supporters

Role	Name	Responsibilities
Investment Planning	Glen DiConza	Endorses relative to distribution 5-year plan or emergent work
Resource Planning	Jim Patterson	Endorses Resources, cost estimate, schedule, and Portfolio Alignment
Distribution Asset Management	Alan LaBarre	Endorses scope, design, conformance with design standards
Project Management	Tim Moore	Endorses Resources, cost estimate, schedule

6.1.2 Reviewers

Reviewers read the paper for content / language and recommends edits if necessary.

Reviewer List	Name
Finance	Fowler, Keith
Regulatory	Katsh, Gideon N.
Jurisdictional Delegates	Grimsley, Jenifer L.
Procurement	Curran, Art
Control Center	Gallagher, Mike

7. ***Decisions:***

I:

(a) APPROVE the investment of $0.600M and a tolerance of +/- 10 % for engineering, material purchase and initial construction activities including cable insulation injection.

(b) NOTE the potential investment of $1.200M and a tolerance of +/- 25%, contingent upon submittal and approval of a Project Sanction paper following completion of final engineering and design.

(c) NOTE that Jim Patterson is the Project Manager and has the approved financial delegation to undertake the activities stated in (a).

Signature.....Date: 12/3/12

Executive Sponsor – Marie Jordan, Senior Vice President, Network Strategy

8. Other Appendices:

8.1 Sanction Request Breakdown by Project (Partial Sanction only)

$M	C047829	Total
CapEx	$0.50	$0.50
OpEx	$0.05	$0.05
Removal	$0.05	$0.05
Total	$0.60	$0.60

8.2 URD One-line

High Hawk Estates URD
East Greenwich, RI
Project C047829
Proactive injection
24,300'.
Replace what can
not be injected.

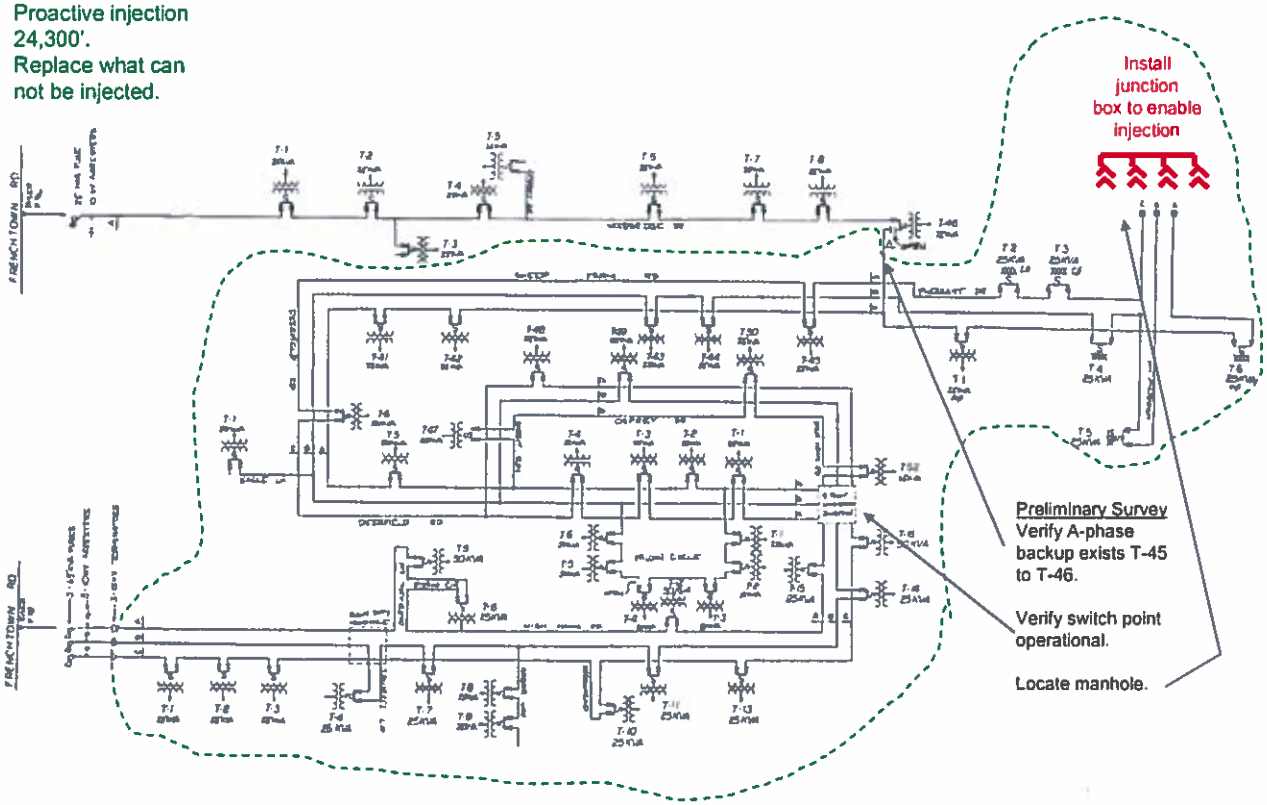

8.3 URD GIS Sketch

High Hawk in Coventry
C047829
Make Ready FY14
and Injection FY15, ~24,300'
Off poles 78 and 96 Frenchtown Rd

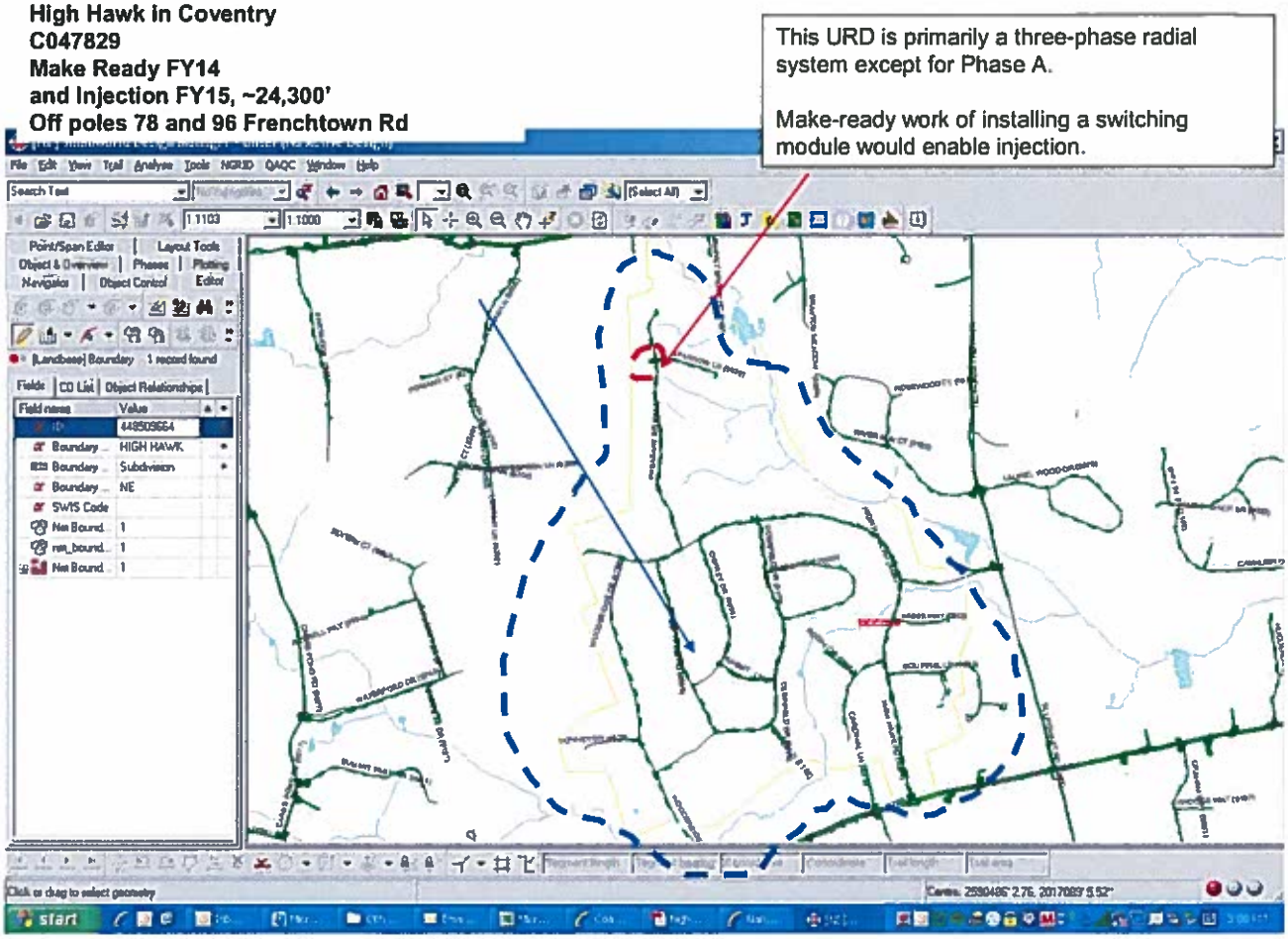

REDACTED

Short Form Sanction Paper

nationalgrid

Title:	Volt Var Optimization Demonstration Project	**Sanction Paper #:**	USSC-14-009 v5
Project #:	C046352, C052708, C053111	**Sanction Type:**	Sanction
Operating Company:	The Narragansett Electric Co.	**Date of Request:**	July 12, 2016
Author:	John Skrzypczak	**Sponsor:**	Carol A. Sedewitz Vice President Electric Asset Management
Utility Service:	Electricity T&D	**Project Manager:**	John Skrzypczak

1 Executive Summary

1.1 Sanctioning Summary

This paper requests sanction of projects C046352, C052708, and C053111 in the amount $6.594M with a tolerance of +/- 10% for the purposes of full implementation.

The sanction amount is $6.594M broken down into:

$5.837M	CapEx
$0.652M	OpEx
$0.105M	Removal

1.2 Project Summary

Through these projects, National Grid will pursue a Volt VAR Optimization (VVO) Demonstration Project in the state of Rhode Island. National Grid has selected Utilidata to supply centralized control functionality designed to optimize the operation of existing and new reactive resources as well as various voltage regulation devices on seven distribution feeders selected for the demonstration project.

At the time of this sanction, VVO is currently enabled on 2 feeders in the Putnam Pike area, and the third feeder will be online with the addition of 5 cellular radios. As this pilot sought not only to explore the potential of VVO, but also the performance of a private mesh network, the switch to a public cellular carrier has significant impacts on being able to finish the project for a reduced cost.

2 *Project Detail*

2.1 Project Description

Please note that the results of the [redacted] RF study may have an impact on the Distribution Line design and associated costs.

Infrastructure Development

Table 1 shows Putnam Pike distribution infrastructure development, which includes the installation of voltage regulators, capacitor banks, and step-down transformer removals/installations and associated area voltage conversion. The area voltage conversion calls for one 4kV voltage regulator to be removed and approximately 4200 circuit feet to be converted to 12.47kV.

The Putnam Pike substation regulator controllers will be replaced with Beckwith M-2001D units, which meet current standards and enables device supervisory control.

Putnam Pike	Line Regulators	Step-down Transformers	Capacitor Banks	Cap Controls (SEL 734B)	Convert (mi)	Load Balancing
Install	9		4			
Remove	1					
Replace	3	3		11	0.80	20

TABLE 1: PUTNAM PIKE ASSETS

Table 2 shows the recommended Tower Hill distribution infrastructure development which includes the installation of voltage line regulators and capacitor banks. There is no recommended work at the substation.

Tower Hill	Line Regulators	Step-down Transformers	Capacitor Banks	Cap Controls (SEL 734B)	Convert (mi)	Load Balancing
Install	9		3			
Remove						
Replace				16		23

TABLE 2: TOWER HILL ASSETS

Table 3 summarizes the total infrastructure development on the circuits out of Putnam Pike and Tower Hill substations. Figures 1-5 shows electrical one-lines of specific asset locations for the various feeders involved in the demonstration project.

Total	Line Regulators	Step-down Transformers	Capacitor Banks	Cap Controls (SEL 734B)	Convert (mi)	Load Balancing
Install	18		7			
Remove	1					
Replace	3	3		27	0.80	43

TABLE 3: TOTAL ASSETS

IS Scope

- Survey and design for establishing radio network between 40 field devices in Putnam pike (Line Voltage regulators, Line Voltage monitors and Capacitor bank controllers) [redacted]
- Establish Multi-Protocol Label Switch (MPLS) network connectivity [redacted]
- Establish authentication mechanism for the radios using existing Smart grid Authentication servers.
- 1 router/1 Out of Band at each Nooseneck and Peck Hill towers to support the new circuit
- Establish MPLS network connectivity from Tower Hill and Putnam Pike substations to Northborough data center [redacted]
- Installation of [redacted] software and testing connectivity between systems (hardware installation and commissioning being managed by Engineering team and configuration [redacted], setting up ESP network for [redacted] server components in data center.
- Establish network connectivity between the National Grid EMS Network and [redacted] system.
- Implement Secure Shell File Transfer Protocol to facilitate the (daily or weekly) transfer data [redacted] for Measurement & Verification analysis.
- Provide access to Engineering and [redacted] users for support and maintenance of field devices, [redacted] System, and network devices through the IPSEC VPM .
- Track potential benefits from deployment and infrastructure development costs to enable future system planning.

The pilot sought to not only explore the VVO functionality, but also to explore the deployment of a private mesh area network. For the project, through an RFP, [redacted] was selected to provide this RF network for both areas. However, after significant issues with the deployment, the project team has elected to use cellular for the remainder of the project. Some of the causes for this shift are:

- The [redacted] Network Management Software is consuming far more information that appropriate, necessary, or predicted.
- The Network has become very 'tower centric' with relatively low 'mesh capability'
- The [redacted] devices appear to require additional pole extensions and taller poles than expected to achieve reasonable performance
- The [redacted] network has a limitation of 10 hops, which was not disclosed prior to start of deployment
- A significant number of radio's have required RMA

These issues have increased the project costs beyond what has been anticipated, and led to the need for 170% more poles to be modified for the project in the Putnam Pike area, as well as multiple visits per pole. Switching to cellular will keep the field installation simple, with no risk of expansion, and requires only minor firewall rules and additional hardware to complete.

2.2 Benefits

The benefits of distribution feeder reactive support and voltage regulation are well known and individual capacitor installations and voltage regulators can be justified to maintain service voltage within required limits and to release capacity on T&D assets. It is believed that a more refined control system will allow the Company to meet its service quality requirements while reducing system losses and reducing customer energy consumption. However, National Grid has not yet evaluated the potential for achieving these additional benefits to be derived from advanced VVO control systems and strategies utilizing centralized control algorithms.

This project is recommended at this time for the following reasons:

- To quantify the potential operational benefits from these systems as stated by the manufacturer in order to improve service to National Grid customers
- To understand potential synergies with other rapidly developing uses of advanced technology on power distribution systems
- To understand how application of these systems could be integrated with existing guidelines to meet current objectives for volt/VAR infrastructure
- To guide system planners on potential benefits from this type of deployment
- To understand system performance when distribution is out of normal configuration

Direct benefits the demonstration project seeks to quantify are as follows:

- Reduction in system losses
- Reduction in customer energy use
- Improvement in voltage performance
- Reduction in feeder demand
- Improved flexibility to meet NE ISO pf performance

- Improved planning & operations capability as a result of increased system performance monitoring

The criteria used for selecting the distribution feeders that are proposed in the demonstration project are as follows:

- 15kV feeder class
- Some level of existing automation Energy Management System (EMS) at substation
- Existing Line capacitors
- At least one set of line regulators on a feeder served by a target substation

Table 4 shows the characteristics of an average Rhode Island feeder with comparison to the feeders that were selected. The selected feeders tended to be longer than the average feeder due to the desire to evaluate a feeder that had distribution line regulators installed.

VVO Feeder Selection Analysis	# of Feeders		Customers	Total Miles	OH Miles	UG Miles	3Ph OH Miles	Cap Banks	kVAR	3PH Line Regs
RI 15 kV Averages	222		1,789	23.8	20.1	3.8	7.9	3.6	2,804.8	0.09
RI Target Sample Averages	51		2,031	38.0	32.1	5.9	11.3	4.3	3,066.7	0.37
Test Sample Averages	7		2,286	47.5	40.4	6.6	13.8	4.9	3,800.0	0.4
Test Sample Totals	7		16,000	332.1	282.5	46.3	96.9	34.0	26,600.0	3.00

TABLE 4: VVO SELECTION ANALYSIS

The selected feeders for this demonstration project are Putnam Pike 38F1, 38F3, 38F5 in the northern area. In the southern area Tower Hill 88F1, 88F3, 88F5, and the 88F7 were selected. Although the 88F7 feeder is not yet in service, Its circuit characteristics were assembled from the portions of existing circuits (including the Lafayette substation feeder 30F2) that will be used to establish its normal configuration.

Required infrastructure development was determined to address existing concerns related to thermal, voltage, and reactive performance before advanced VVO could be executed.

2.3 Business & Customer Issues

2.4 Alternatives

Alternative 1: Do Nothing

This solution was rejected after a comprehensive project study report was completed to evaluate the benefits of current National Grid volt VAR management methods versus this proposed advanced volt VAR management solution with two-way communications and a centralized algorithm controlling voltage regulators and capacitor banks. The results of this report were presented to internal stakeholders as well as the Rhode Island Public Utilities Commission staff. Note, the internal study recommended pursuing this project's advanced volt var management solution in lieu of remaining with the currently used method.

2.5 Investment Recovery

Investment Recovery will be through standard rate recovery mechanisms.

2.5.1 Customer Impact

This project results in an indicative first full year revenue requirement when the asset is placed in service equal to approximately $1.015M. This is indicative only. The actual revenue requirement will differ, depending upon the timing of the next rate case and/or the timing of the next filing in which the project is included in rate base.

3 Related Projects, Scoring, Budgets

3.1 Summary of Projects

Project Number	Project Type (Elec only)	Project Title	Estimate Amount ($M)
C046352	D-Line	VVO Pilot Distribution	4.960
C052708	D-Sub	VVO Pilot Substation	0.228
C053111	IS	VVO Pilot IS	1.406
		Total	6.594

3.2 Associated Projects

N/A

REDACTED

3.3 Prior Sanctioning History

Describe previous sanctions for the projects included in the scope of this paper (Newest to Oldest).

Date	Governance Body	Sanctioned Amount	Potential Project Investment	Paper Title	Sanction Type	Tolerance
01/19/2016	**USSC**	**$5.435M**	**$6.235M**	Volt Var Optimization Demonstration Project	**Partial**	**+-25%**
06/23/2015	**USSC**	**$4.239M**	**$4.913M**	Volt Var Optimization Demonstration Project	**Partial**	**+-25%**
11/04/2014	**USSC**	**$3.000M**	**$4.795M**	Volt Var Optimization Demonstration Project	**Partial**	**+-25%**
01/14/2014	**USSC**	**$1.200M**	**$4.232M**	Volt Var Optimization Demonstration Project	**Partial**	**+-25%**
12/03/2013	**Powerplant**	**$0.500M**	**N/A**	Volt Var Optimization Demonstration Project	**Rob Sheridan, DOA**	**+50% -25%**

3.4 Category

Category	Reference to Mandate, Policy, NPV, or Other
○ Mandatory	
◉ Policy- Driven	Advanced Volt Var Management
○ Justified NPV	
○ Other	

3.5 Asset Management Risk Score

Asset Management Risk Score: 36

Primary Risk Score Driver: (Policy Driven Projects Only)

◉ Reliability ○ Environment ○ Health & Safety ○ Not Policy Driven

3.6 Complexity Level

○ High Complexity ◉ Medium Complexity ○ Low Complexity ○ N/A

Complexity Score: 25

3.7 Next Planned Sanction Review

Date (Month/Year)	Purpose of Sanction Review
8/2017	Closeout Sanction

4 Financial

4.1 Business Plan

Business Plan Name & Period	Project included in approved Business Plan?	Over / Under Business Plan	Project Cost relative to approved Business Plan ($)
FY17-21 NE Distribution Capital Plan	⊙ Yes ○ No	⊙ Over ○ Under ○ NA	$0.584M

4.1.1 If cost > approved Business Plan how will this be funded?

Re-allocation of funds within the portfolio has been managed by Resource Planning to meet jurisdictional budgetary, statutory and regulatory requirements.

4.2 CIAC / Reimbursement

N/A

4.3 Cost Summary Table

Project Number	Project Title	Project Estimate Level (%)	Spend	Prior Yrs	Current Planning Horizon ($M) Yr. 1 2016/17	Yr. 2 2017/18	Yr. 3 2018/19	Yr. 4 2019/20	Yr. 5 2020/21	Yr. 6 + 2021/22	Total
C046352	VVO Pilot Distribution	Est Lvl (e.g. +/- 10%)	CapEx	3.049	1.288	0.050	-	-	-	-	4.387
			OpEx	0.447	0.028	-	-	-	-	-	0.475
			Removal	0.070	0.028	-	-	-	-	-	0.098
			Total	3.566	1.344	0.050	-	-	-	-	4.960
C052708	VVO Pilot Substation	Est Lvl (e.g. +/- 10%)	CapEx	0.223	0.005	-	-	-	-	-	0.228
			OpEx	-	-	-	-	-	-	-	-
			Removal	-	-	-	-	-	-	-	-
			Total	0.223	0.005	-	-	-	-	-	0.228
C053111	VVO Pilot IS	Est Lvl (e.g. +/- 10%)	CapEx	1.012	0.210	-	-	-	-	-	1.222
			OpEx	0.177	-	-	-	-	-	-	0.177
			Removal	0.007	-	-	-	-	-	-	0.007
			Total	1.196	0.210	-	-	-	-	-	1.406
Total Project Sanction			CapEx	4.284	1.503	0.050	-	-	-	-	5.837
			OpEx	0.624	0.028	-	-	-	-	-	0.652
			Removal	0.077	0.028	-	-	-	-	-	0.105
			Total	4.985	1.559	0.050	-	-	-	-	6.594

*Note there is a recurring annual IS OpEx cost of $0.289M starting in FY15 for maintaining Security, Network WAN components, [redacted], servers, hardware, and software licensing.

4.4 Project Budget Summary Table

Project Costs per Business Plan

		Current Planning Horizon ($M)						
$M	Prior Yrs (Actual)	Yr. 1 2016/17	Yr. 2 2017/18	Yr. 3 2018/19	Yr. 4 2019/20	Yr. 5 2020/21	Yr. 6 + 2021/22	Total
CapEx	4.284	0.852	0.000	0.000	0.000	0.000	0.000	5.136
OpEx	0.624	0.075	0.000	0.000	0.000	0.000	0.000	0.699
Removal	0.077	0.098	0.000	0.000	0.000	0.000	0.000	0.175
Total Cost in Bus. Plan	4.985	1.025	0.000	0.000	0.000	0.000	0.000	6.010

Variance (Business Plan-Project Estimate)

		Current Planning Horizon ($M)						
$M	Prior Yrs (Actual)	Yr. 1 2016/17	Yr. 2 2017/18	Yr. 3 2018/19	Yr. 4 2019/20	Yr. 5 2020/21	Yr. 6 + 2021/22	Total
CapEx	0.000	(0.651)	(0.050)	0.000	0.000	0.000	0.000	(0.701)
OpEx	0.000	0.047	0.000	0.000	0.000	0.000	0.000	0.047
Removal	0.000	0.070	0.000	0.000	0.000	0.000	0.000	0.070
Total Cost in Bus. Plan	0.000	(0.534)	(0.050)	0.000	0.000	0.000	0.000	(0.584)

5 Key Milestones

Milestone	Target Date: (Month/Year)
Partial Sanction	01/2014
Construction Start	07/2014
Partial Sanction	06/2015
IS Construction and implementation Complete - CC	09/2015
Partial Sanction	01/2016
Final Engineering Complete	05/2016
Project Sanction	07/2016
Construction Complete	04/2017
Project Closure	08/2017

REDACTED

6 Statements of Support

6.1.1 Supporters

The supporters listed have aligned their part of the business to support the project.

Role	Individual	Responsibilities
Investment Planner	DiConza, Glen	Endorses relative to 5-year business plan or emergent work
Resource Planning	Wyman, Anne	Endorses Resources, cost estimate, schedule, and Portfolio Alignment
Asset Management / Planning	Labarre, Alan T.	Endorses scope, estimate, and schedule with the company's goals, strategies, and objectives
Project Management	Schneller, Andrew	Endorses Resources, cost estimate, schedule
Electric Project Estimation	Simonds, Jammie	Endorses Costs Estimate

6.1.2 Reviewers

The reviewers have provided feedback on the content/language of the paper.

Reviewer List	Individual
Finance (Dist)	Easterly, Patricia
Regulatory	Zschokke, Peter
Jurisdictional Delegates	Patterson, Jim
Control Center	Gallagher, Michael
Procurement	Curran, Art

REDACTED

7 *Decisions*

I:

(a) APPROVE this paper and the investment of $6.594M and a tolerance of +/- 10%

(b) NOTE that John Skrzypczak is the Project Manager and has the approved financial delegation.

Signature.....Date...7/15/16.....

Executive Sponsor – Chris Kelly, Acting Senior Vice President, Electric Process and Engineering

8 Other Appendices

8.1 Figures

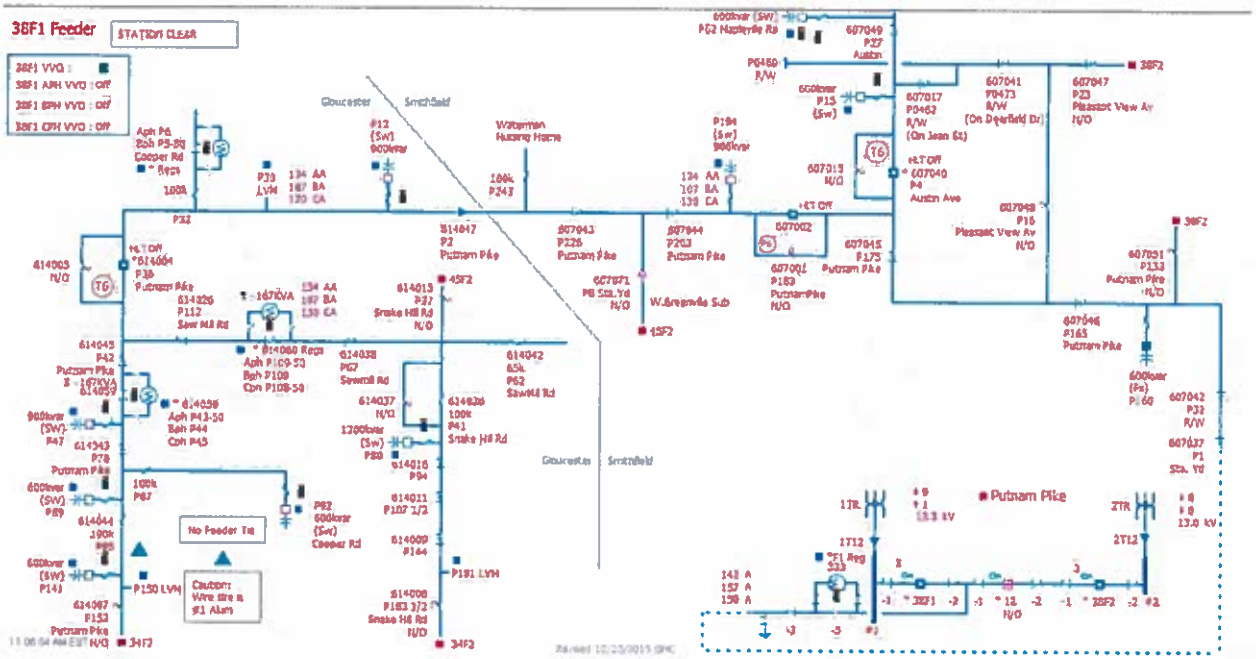

38F1

Short Form Sanction Paper

nationalgrid

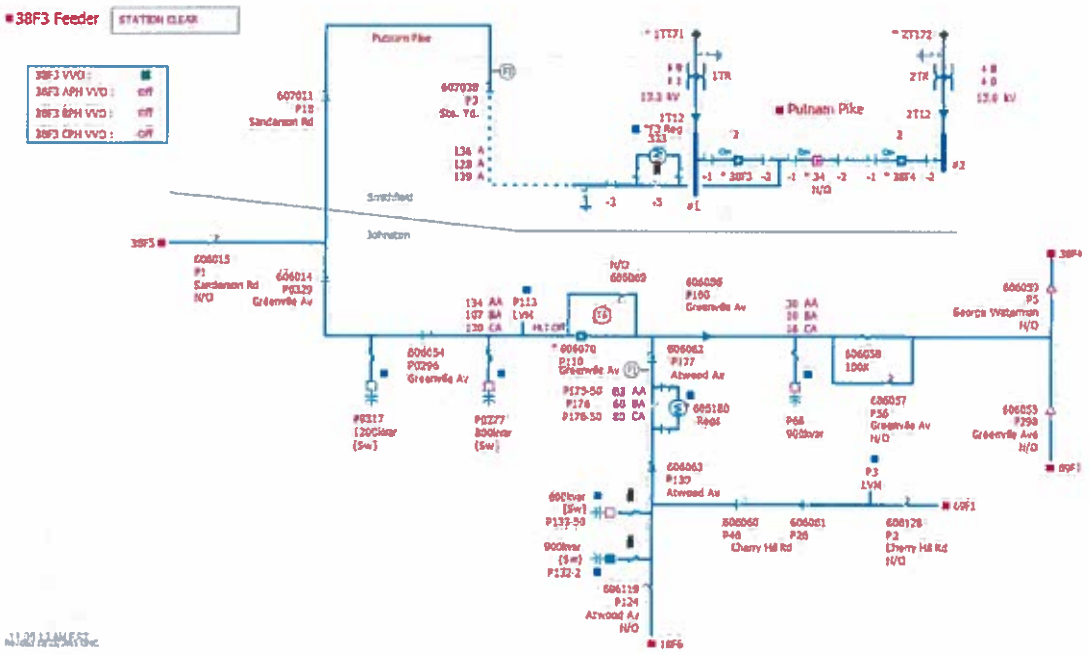

38F3

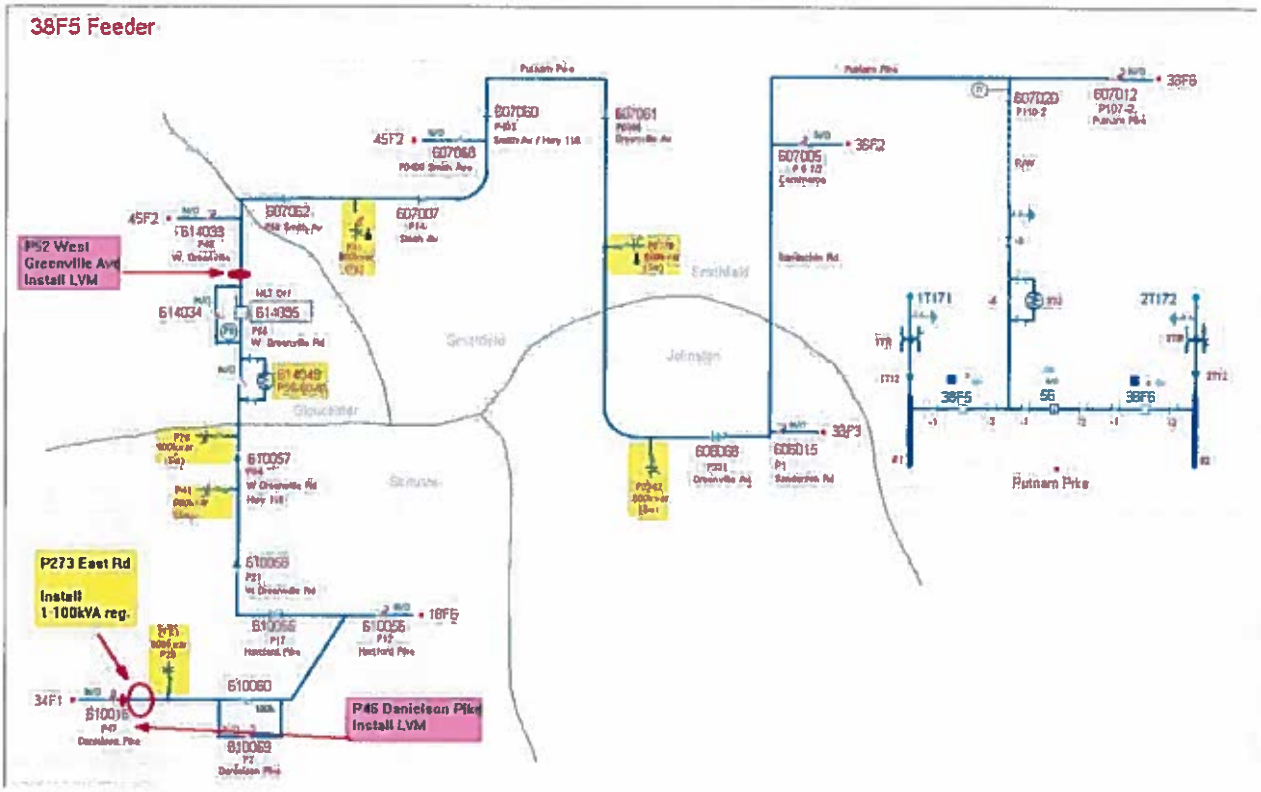
38F5 Feeder
P52 West Greenville Ave Install LVM
P273 East Rd Install 1-100kVA reg.
P45 Danielson Pike Install LVM
45F2
34F1
38F2
38F3
38F5
38F6
56
Putnam Pike

38F5

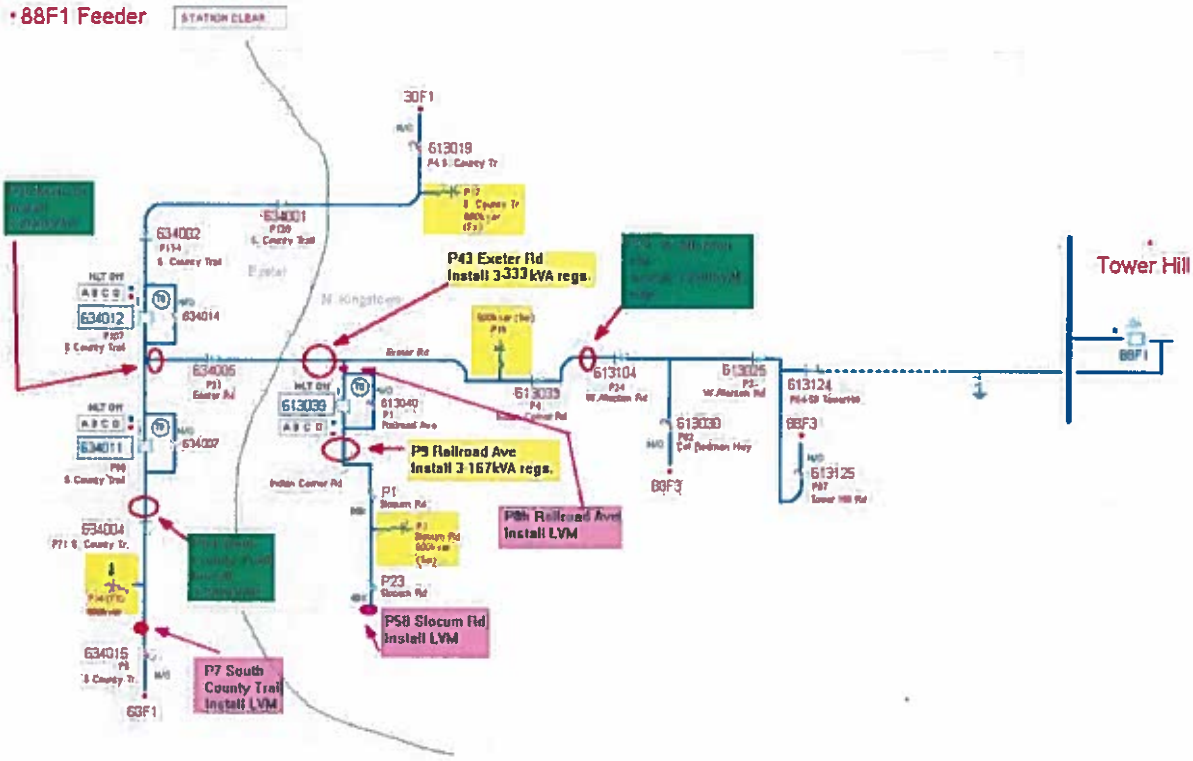
• 88F1 Feeder
30F1
613019
634001
634002
634012
634014
634005
634011
634007
634004
634015
63F1
613039
613040
613033
613104
613030
88F3
613125
613124
88F1
Tower Hill
P43 Exeter Rd
Install 3333kVA regs.
P5 Railroad Ave
Install 3-167kVA regs.
P8h Railroad Ave
Install LVM
P1
P23
P58 Slocum Rd
Install LVM
P7 South
County Trail
Install LVM

88F1

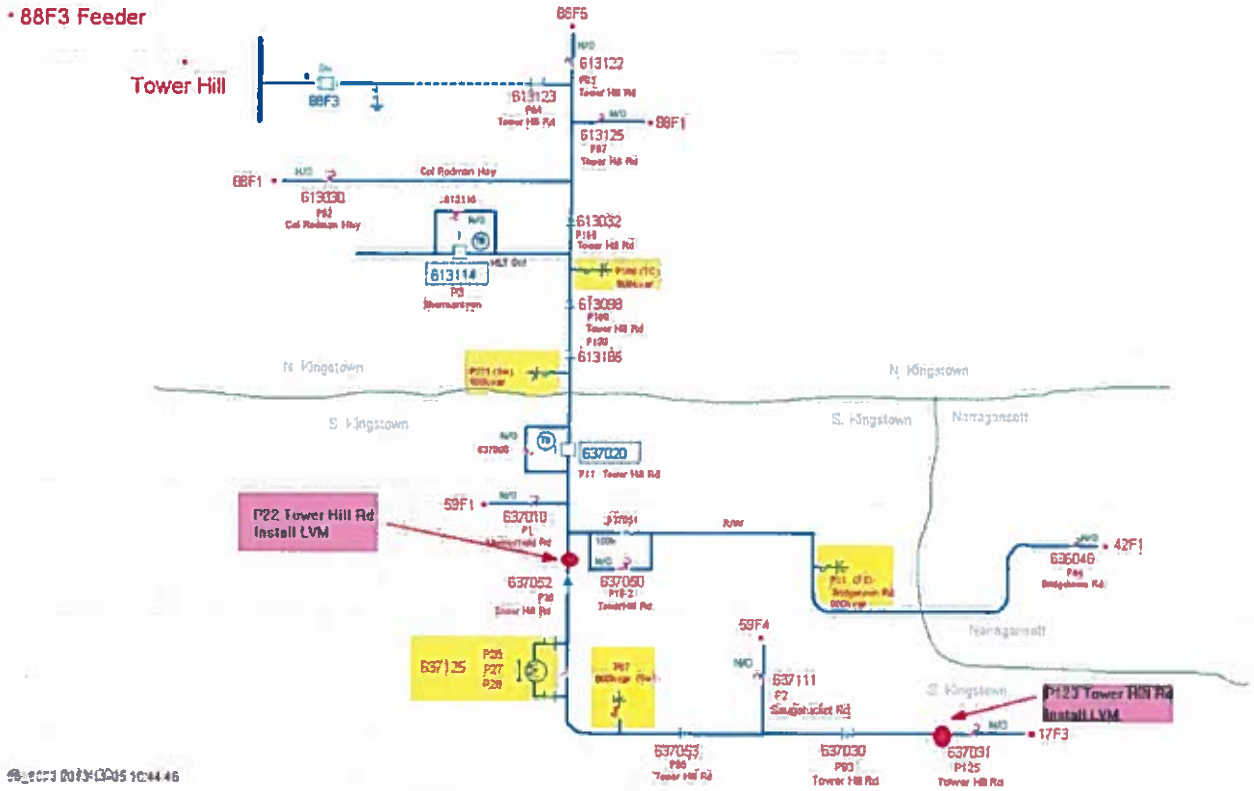
• 88F3 Feeder
Tower Hill
88F3
86F5
613122
613123
88F1
613125
88F1
613030
613032
613114
613099
613105
N. Kingstown
S. Kingstown
637020
59F1
637010
P22 Tower Hill Rd
Install LVM
637052
637050
42F1
636046
59F4
637111
637125
637053
637030
637031
17F3
P23 Tower Hill Rd
Install LVM

88F3

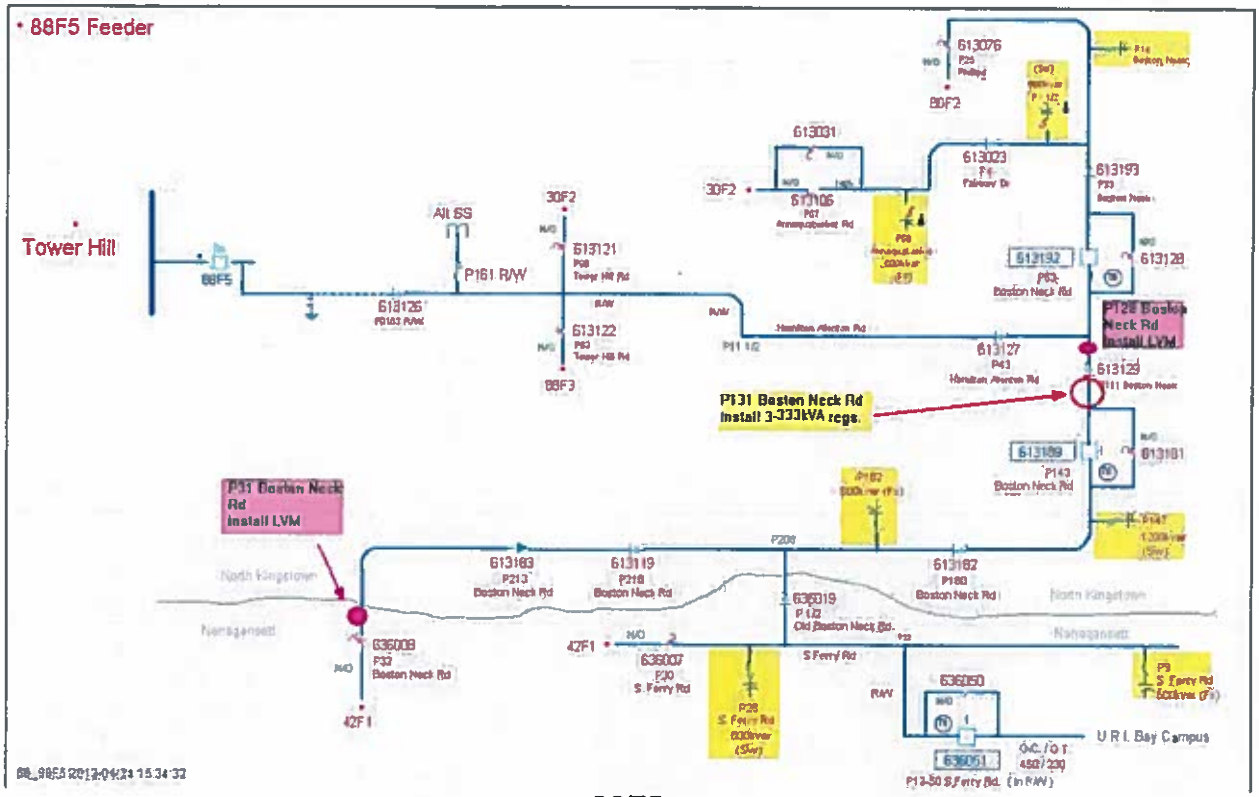
88F5 Feeder
Tower Hill
88F5
Alt SS
P161 R/W
30F2
613121
613122
88F3
613126
613076
80F2
613031
30F2
613106
613023
613193
613192
613128
P128 Boston Neck Rd Install LVM
613127
613129
P131 Boston Neck Rd Install 3-333kVA regs.
613189
613181
P143
Boston Neck Rd
P31 Boston Neck Rd Install LVM
North Kingstown
Nanaganset
613183
P213
Boston Neck Rd
613119
P218
Boston Neck Rd
P208
613182
P180
Boston Neck Rd
636019
P 1/2
Old Boston Neck Rd
636008
P32
Boston Neck Rd
42F1
636007
P30
S. Ferry Rd
S Ferry Rd
P28
S. Ferry Rd
636050
636051
U R I. Bay Campus
P13-50 S.Ferry Rd. (In R/W)

88F5

Short Form Sanction Paper

nationalgrid

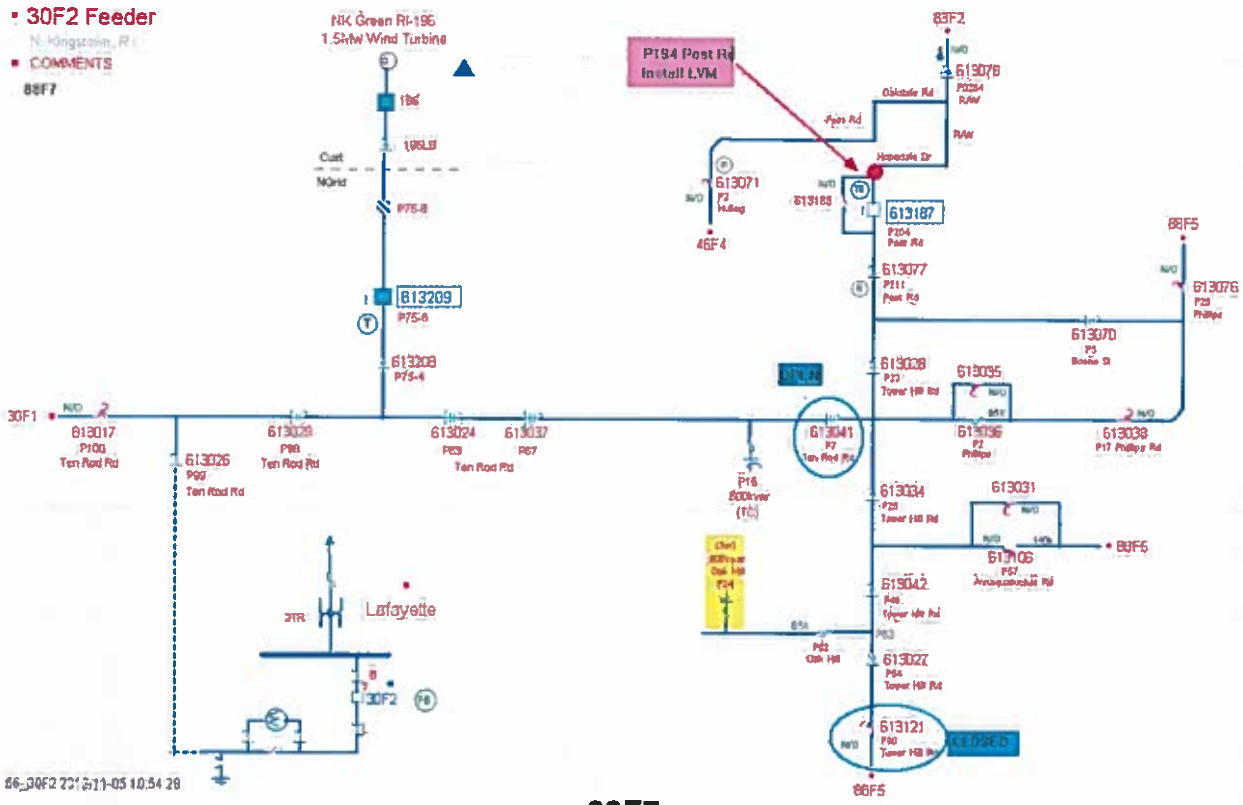

88F7

nationalgrid

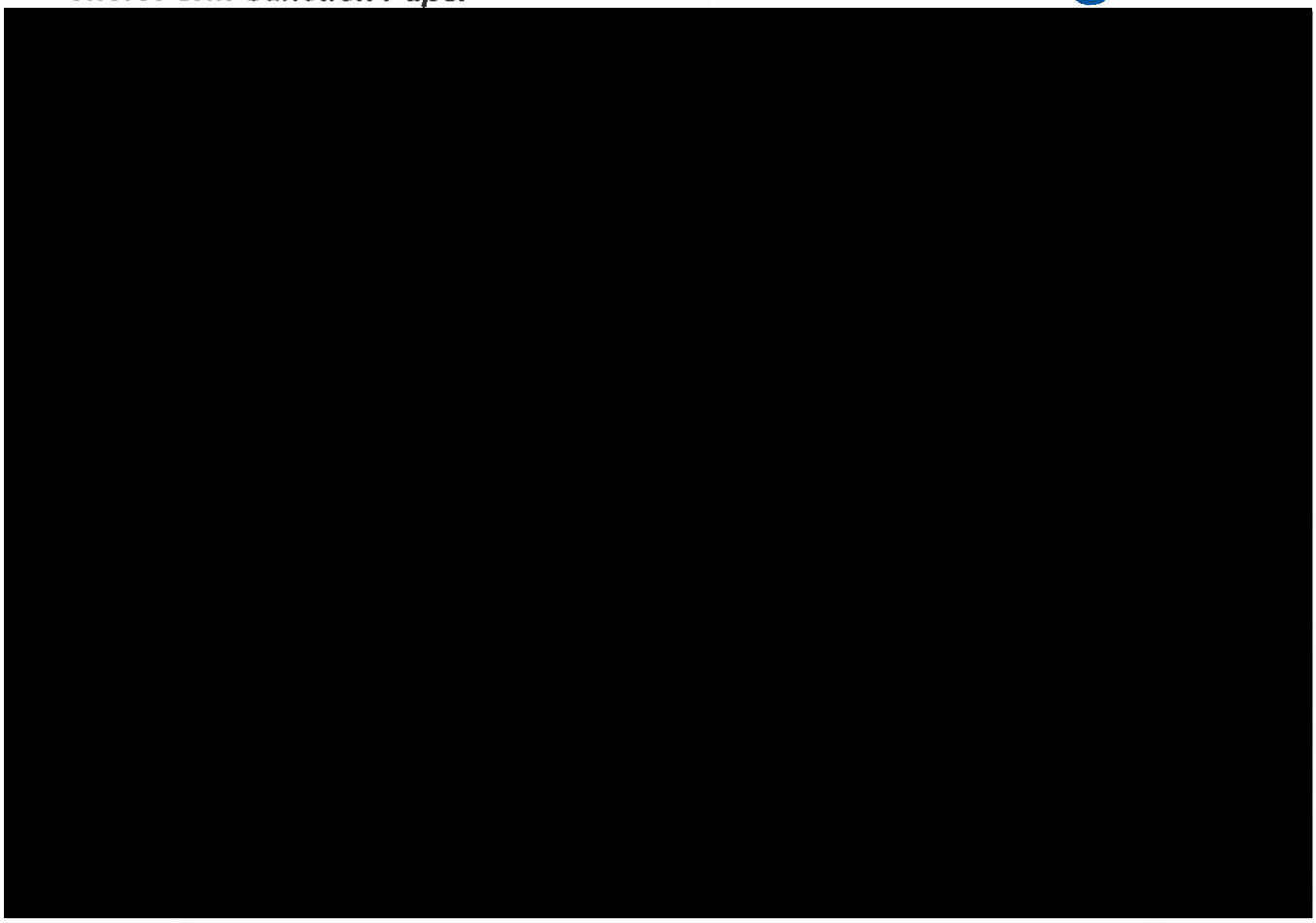

DTLS

Short Form Sanction Paper

nationalgrid

Title:	Volt Var Optimization Demonstration Project	**Sanction Paper #:**	USSC-14-009 v4
Project #:	C046352, C052708, C053111/INVP 3752	**Sanction Type:**	Partial Sanction
Operating Company:	The Narragansett Electric Co.	**Date of Request:**	January 26, 2016
Author:	John Skrzypczak	**Sponsor:**	John E. Gavin Vice President Electric Asset Management
Utility Service:	Electricity T&D	**Project Manager:**	John Skrzypczak

1 Executive Summary

1.1 Sanctioning Summary

This paper requests partial sanction of projects C046352, C052708, and C053111 in the amount $5.435M with a tolerance of +/- 10% for the purposes of final engineering, procurement of materials, IS implementation and design and construction activities.

The sanction amount is $5.435M broken down into:

$4.961M	CapEx
$0.398M	OpEx
$0.076M	Removal

NOTE the potential investment of $6.235M with a tolerance of +/- 25%, contingent upon submittal and approval of a Project Sanction paper following completion of the Tower Hill design.

1.2 Project Summary

Through these projects, National Grid will pursue a Volt VAR Optimization (VVO) Demonstration Project in the state of Rhode Island. National Grid has selected Utilidata to supply centralized control functionality designed to optimize the operation of existing and new reactive resources as well as various voltage regulation devices on seven distribution feeders selected for the demonstration project.

2 Project Detail

2.1 Project Description

Infrastructure Development

Table 1 shows Putnam Pike distribution infrastructure development, which includes the installation of voltage regulators, capacitor banks, and step-down transformer removals/installations and associated area voltage conversion. The area voltage conversion calls for one 4kV voltage regulator to be removed and approximately 4200 circuit feet to be converted to 12.47kV.

The Putnam Pike substation regulator controllers will be replaced with Beckwith M-2001D units, which meet current standards and enables device supervisory control.

Putnam Pike	Line Regulators	Step-down Transformers	Capacitor Banks	Cap Controls (SEL 734B)	Convert (mi)	Load Balancing
Install	9		4			
Remove	1					
Replace	3	3		11	0.80	20

TABLE 1: PUTNAM PIKE ASSETS

Table 2 shows the recommended Tower Hill distribution infrastructure development which includes the installation of voltage line regulators and capacitor banks. There is no recommended work at the substation.

Tower Hill	Line Regulators	Step-down Transformers	Capacitor Banks	Cap Controls (SEL 734B)	Convert (mi)	Load Balancing
Install	9		3			
Remove						
Replace				16		23

TABLE 2: TOWER HILL ASSETS

Table 3 summarizes the total infrastructure development on the circuits out of Putnam Pike and Tower Hill substations. Figures 1-5 shows electrical one-lines of specific asset locations for the various feeders involved in the demonstration project.

Total	Line Regulators	Step-down Transformers	Capacitor Banks	Cap Controls (SEL 734B)	Convert (mi)	Load Balancing
Install	18		7			
Remove	1					

Total	Line Regulators	Step-down Transformers	Capacitor Banks	Cap Controls (SEL 734B)	Convert (mi)	Load Balancing
Replace	3	3		27	0.80	43

TABLE 3: TOTAL ASSETS

IS Scope

- Survey and design for establishing radio network between 40 field devices in Putnam pike (Line Voltage regulators, Line Voltage monitors and Capacitor bank controllers) with [redacted] station.
- Establish Multi-Protocol Label Switch (MPLS) network connectivity between [redacted] station and Northborough data center [redacted] server location.
- Establish authentication mechanism for the radios using existing Smart grid Authentication servers.
- 1 router/1 Out of Band at each Nooseneck and Peck Hill towers to support the new circuit
- Establish MPLS network connectivity from Tower Hill and Putnam Pike substations to Northborough data center [redacted] server location.
- Installation of [redacted] software and testing connectivity between systems (hardware installation and commissioning being managed by Engineering team and configuration [redacted]), setting up ESP network for [redacted] server components in data center.
- Establish network connectivity between the National Grid EMS Network and [redacted] system.
- Implement Secure Shell File Transfer Protocol to facilitate the (daily or weekly) transfer data [redacted] for Measurement & Verification analysis.
- Provide access to Engineering and [redacted] users for support and maintenance of field devices, [redacted] System, and network devices through the IPSEC VPM .
- Track potential benefits from deployment and infrastructure development costs to enable future system planning.

2.2 Benefits

The benefits of distribution feeder reactive support and voltage regulation are well known and individual capacitor installations and voltage regulators can be justified to maintain service voltage within required limits and to release capacity on T&D assets. It

is believed that a more refined control system will allow the Company to meet its service quality requirements while reducing system losses and reducing customer energy consumption. However, National Grid has not yet evaluated the potential for achieving these additional benefits to be derived from advanced VVO control systems and strategies utilizing centralized control algorithms.

This project is recommended at this time for the following reasons:

- To quantify the potential operational benefits from these systems as stated by the manufacturer in order to improve service to National Grid customers
- To understand potential synergies with other rapidly developing uses of advanced technology on power distribution systems
- To understand how application of these systems could be integrated with existing guidelines to meet current objectives for volt/VAR infrastructure
- To guide system planners on potential benefits from this type of deployment
- To understand system performance when distribution is out of normal configuration

Direct benefits the demonstration project seeks to quantify are as follows:

- Reduction in system losses
- Reduction in customer energy use
- Improvement in voltage performance
- Reduction in feeder demand
- Improved flexibility to meet NE ISO pf performance
- Improved planning & operations capability as a result of increased system performance monitoring

The criteria used for selecting the distribution feeders that are proposed in the demonstration project are as follows:

- 15kV feeder class
- Some level of existing automation Energy Management System (EMS) at substation
- Existing Line capacitors
- At least one set of line regulators on a feeder served by a target substation

Table 4 shows the characteristics of an average Rhode Island feeder with comparison to the feeders that were selected. The selected feeders tended to be longer than the average feeder due to the desire to evaluate a feeder that had distribution line regulators installed.

VVO Feeder Selection Analysis	# of Feeders		Customers	Total Miles	OH Miles	UG Miles	3Ph OH Miles	Cap Banks	kVAR	3PH Line Regs

VVO Feeder Selection Analysis	# of Feeders		Customers	Total Miles	OH Miles	UG Miles	3Ph OH Miles	Cap Banks	kVAR	3PH Line Regs
RI 15 kV Averages	222		1,789	23.8	20.1	3.8	7.9	3.6	2,804.8	0.09
RI Target Sample Averages	51		2,031	38.0	32.1	5.9	11.3	4.3	3,066.7	0.37
Test Sample Averages	7		2,286	47.5	40.4	6.6	13.8	4.9	3,800.0	0.4
Test Sample Totals	7		16,000	332.1	282.5	46.3	96.9	34.0	26,600.0	3.00

TABLE 4: VVO SELECTION ANALYSIS

The selected feeders for this demonstration project are Putnam Pike 38F1, 38F3, 38F5 in the northern area. In the southern area Tower Hill 88F1, 88F3, 88F5, and the 88F7 were selected. Although the 88F7 feeder is not yet in service, Its circuit characteristics were assembled from the portions of existing circuits (including the Lafayette substation feeder 30F2) that will be used to establish its normal configuration.

Required infrastructure development was determined to address existing concerns related to thermal, voltage, and reactive performance before advanced VVO could be executed.

2.3 Business & Customer Issues

National Grid has identified that continuing with the [redacted] hardware poses a significant risk to the budget and schedule of the project for the Tower Hill area. To complete the project, [redacted] has requested an additional six(6) 3rd party towers to establish network communications. This is beyond what the project budget can support, both from a one-time cost, as well as ongoing OPEX in the form of leases. National Grid has identified a subsection of the Tower Hill region where the RF surveys are already complete, and no additional towers are required. National Grid proposes to finish this area with [redacted] devices (14), but to utilize cellular communications for the remaining devices (25). This cellular network will be modeled after the infrastructure deployed in WSES, and is expected to be significantly less expensive than continuing the [redacted] network. The cellular option will not be a 'mesh' network, but will still meet the functional requirements of the project.

2.4 Alternatives

Alternative 1: Do Nothing

This solution was rejected after a comprehensive project study report was completed to evaluate the benefits of current National Grid volt VAR management methods versus this proposed advanced volt VAR management solution with two-way communications and a centralized algorithm controlling voltage regulators and capacitor banks. The results of this report were presented to internal stakeholders as well as the Rhode Island Public Utilities Commission staff. Note, the internal study recommended pursuing this project's advanced volt var management solution in lieu of remaining with the currently used method.

2.5 Investment Recovery

Investment Recovery will be through standard rate recovery mechanisms.

2.5.1 Customer Impact

This project results in an indicative first full year revenue requirement when the asset is placed in service equal to approximately $1.152M. This is indicative only. The actual revenue requirement will differ, depending upon the timing of the next rate case and/or the timing of the next filing in which the project is included in rate base.

3 Related Projects, Scoring, Budgets

3.1 Summary of Projects

Project Number	Project Type (Elec only)	Project Title	Estimate Amount ($M)
C046352	D-Line	VVO Pilot Distribution	4.604
C052708	D-Sub	VVO Pilot Substation	0.217
C053111	IS	VVO Pilot IS	1.414
		Total	6.235

3.2 Associated Projects

N/A

REDACTED

3.3 Prior Sanctioning History

Describe previous sanctions for the projects included in the scope of this paper (Newest to Oldest).

Date	Governance Body	Sanctioned Amount	Potential Project Investment	Paper Title	Sanction Type	Tolerance
06/23/2015	**USSC**	**$4.239M**	**$4.913M**	Volt Var Optimization Demonstration Project	**Partial**	**+-25%**
11/04/2014	**USSC**	**$3.000M**	**$4.795M**	Volt Var Optimization Demonstration Project	**Partial**	**+-25%**
01/14/2014	**USSC**	**$1.200M**	**$4.232M**	Volt Var Optimization Demonstration Project	**Partial**	**+-25%**
12/03/2013	**Powerplant**	**$0.500M**	**N/A**	Volt Var Optimization Demonstration Project	**Rob Sheridan, DOA**	**+50% -25%**

Note: The RF Network design could not be implemented as originally planned and required an increased number of RF Devices, towers and IS infrastructure to become operational. This increase in scope is the main cause of the overall project estimate increase.

3.4 Category

Category	Reference to Mandate, Policy, NPV, or Other
○ Mandatory	
◉ Policy- Driven	Advanced Volt Var Management
○ Justified NPV	
○ Other	

3.5 Asset Management Risk Score

Asset Management Risk Score: 36

Primary Risk Score Driver: (Policy Driven Projects Only)

◉ Reliability ○ Environment ○ Health & Safety ○ Not Policy Driven

3.6 Complexity Level

○ High Complexity ◉ Medium Complexity ○ Low Complexity ○ N/A

Complexity Score: 25

3.7 Next Planned Sanction Review

Date (Month/Year)	Purpose of Sanction Review
6/2016	Project Sanction

4 Financial

4.1 Business Plan

Business Plan Name & Period	Project included in approved Business Plan?	Over / Under Business Plan	Project Cost relative to approved Business Plan ($)
FY17-21 NE Distribution Capital Plan	⊙ Yes ○ No	⊙ Over ○ Under ○ NA	$0.120M

4.1.1 If cost > approved Business Plan how will this be funded?

Re-allocation of funds within the portfolio will be managed by the Business Support Manager to meet jurisdictional budgetary, statutory and regulatory requirements.

4.2 CIAC / Reimbursement

N/A

4.3 Cost Summary Table

Project Number	Project Title	Project Estimate Level (%)	Spend	Prior Yrs	Current Planning Horizon ($M) Yr. 1 2016/17	Yr. 2 2017/18	Yr. 3 2018/19	Yr. 4 2019/20	Yr. 5 2020/21	Yr. 6 + 2019/20	Total
C046352	VVO Pilot Distribution	Est Lvl (e.g. +/- 25%)	CapEx	3.314	1.000	-	-	-	-	-	4.314
			OpEx	0.221	-	-	-	-	-	-	0.221
			Removal	0.069	-	-	-	-	-	-	0.069
			Total	3.604	1.000	-	-	-	-	-	4.604
C052708	VVO Pilot Substation	Est Lvl (e.g. +/- 25%)	CapEx	0.217	-	-	-	-	-	-	0.217
			OpEx	-	-	-	-	-	-	-	-
			Removal	-	-	-	-	-	-	-	-
			Total	0.217	-	-	-	-	-	-	0.217
C053111	VVO Pilot IS	Est Lvl (e.g. +/- 25%)	CapEx	1.085	0.145	-	-	-	-	-	1.230
			OpEx	0.177	-	-	-	-	-	-	0.177
			Removal	0.007	-	-	-	-	-	-	0.007
			Total	1.269	0.145	-	-	-	-	-	1.414
Total Project Sanction			CapEx	4.616	1.145	-	-	-	-	-	5.761
			OpEx	0.398	-	-	-	-	-	-	0.398
			Removal	0.076	-	-	-	-	-	-	0.076
			Total	5.090	1.145	-	-	-	-	-	6.235

*Note there is a recurring annual IS OpEx cost of $0.289M starting in FY15 for maintaining Security, Network WAN components, [redacted] units, servers, hardware, and software licensing.

4.4 Project Budget Summary Table

Project Costs per Business Plan

		Current Planning Horizon ($M)						
$M	Prior Yrs (Actual)	Yr. 1 2016/17	Yr. 2 2017/18	Yr. 3 2018/19	Yr. 4 2019/20	Yr. 5 2020/21	Yr. 6 + 2021/22	Total
CapEx	4.616	0.852	0.000	0.000	0.000	0.000	0.000	5.468
OpEx	0.398	0.075	0.000	0.000	0.000	0.000	0.000	0.473
Removal	0.076	0.098	0.000	0.000	0.000	0.000	0.000	0.174
Total Cost in Bus. Plan	5.090	1.025	0.000	0.000	0.000	0.000	0.000	6.115

Variance (Business Plan-Project Estimate)

		Current Planning Horizon ($M)						
$M	Prior Yrs (Actual)	Yr. 1 2016/17	Yr. 2 2017/18	Yr. 3 2018/19	Yr. 4 2019/20	Yr. 5 2020/21	Yr. 6 + 2021/22	Total
CapEx	0.000	(0.293)	0.000	0.000	0.000	0.000	0.000	(0.293)
OpEx	0.000	0.075	0.000	0.000	0.000	0.000	0.000	0.075
Removal	0.000	0.098	0.000	0.000	0.000	0.000	0.000	0.098
Total Cost in Bus. Plan	0.000	(0.120)	0.000	0.000	0.000	0.000	0.000	(0.120)

5 Key Milestones

Milestone	Target Date: (Month/Year)
Partial Sanction	01/2014
Construction Start	07/2014
Partial Sanction	06/2015
IS Construction and implementation Complete - CC	09/2015
Partial Sanction	01/2016
Final Engineering Complete	05/2016
Project Sanction	06/2016
Construction Complete	11/2016
Project Closure	03/2017

6 Statements of Support

6.1.1 Supporters

The supporters listed have aligned their part of the business to support the project.

Role	Individual	Responsibilities
Investment Planner	DiConza, Glen	Endorses relative to 5-year business plan or emergent work
Resource Planning	Wyman, Anne Phillips, Mark	Endorses Resources, cost estimate, schedule, and Portfolio Alignment
Asset Management / Planning	Labarre, Alan T.	Endorses scope, estimate, and schedule with the company's goals, strategies, and objectives
Project Management	Schneller, Andrew	Endorses Resources, cost estimate, schedule

6.1.2 Reviewers

The reviewers have provided feedback on the content/language of the paper.

Reviewer List	Individual
Finance (Dist)	Fowler, Keith
Regulatory	Zschokke, Peter
Jurisdictional Delegates	Patterson, Jim
Control Center	Gallagher, Michael
Procurement	Curran, Art

REDACTED

7 ***Decisions***

I:

(a) APPROVE the investment of $5.435M and a tolerance of +/- 10% for purposes of final engineering, procurement of materials, IS implementation and construction activities

(b) NOTE the potential investment of $6.235M and a tolerance of +/-25%, contingent upon submittal and approval of a Project Sanction paper following completion of the Tower Hill design.

(c) NOTE that John Skrzypczak is the Project Manager and has the approved financial delegation to undertake the activities stated in (a).

Signature.....Date...1/28/16

Executive Sponsor – Marie Jordan, Senior Vice President, Electric Process and Engineering

8 Other Appendices

8.1 Sanction Request Breakdown by Project

$M	C046352	C052708	C053111	Total
CapEx	3.514	0.217	1.230	4.961
OpEx	0.221	0.000	0.177	0.398
Removal	0.069	0.000	0.007	0.076
Total	3.804	0.217	1.414	5.435

8.2 Figures

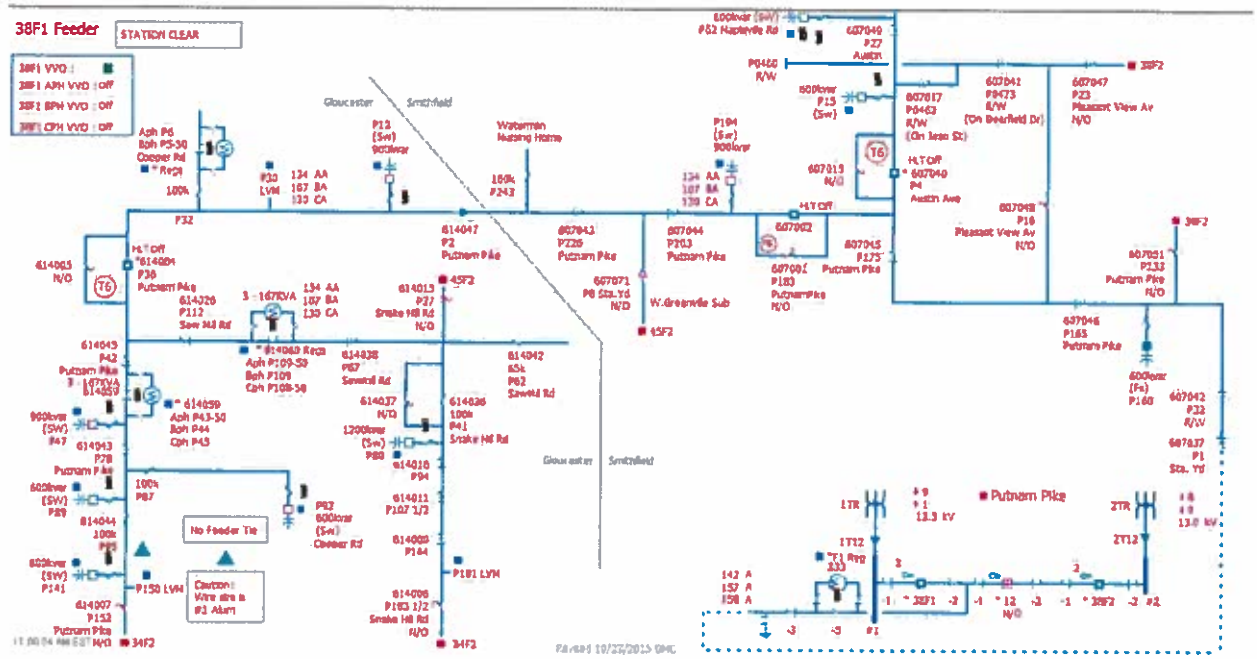

38F1

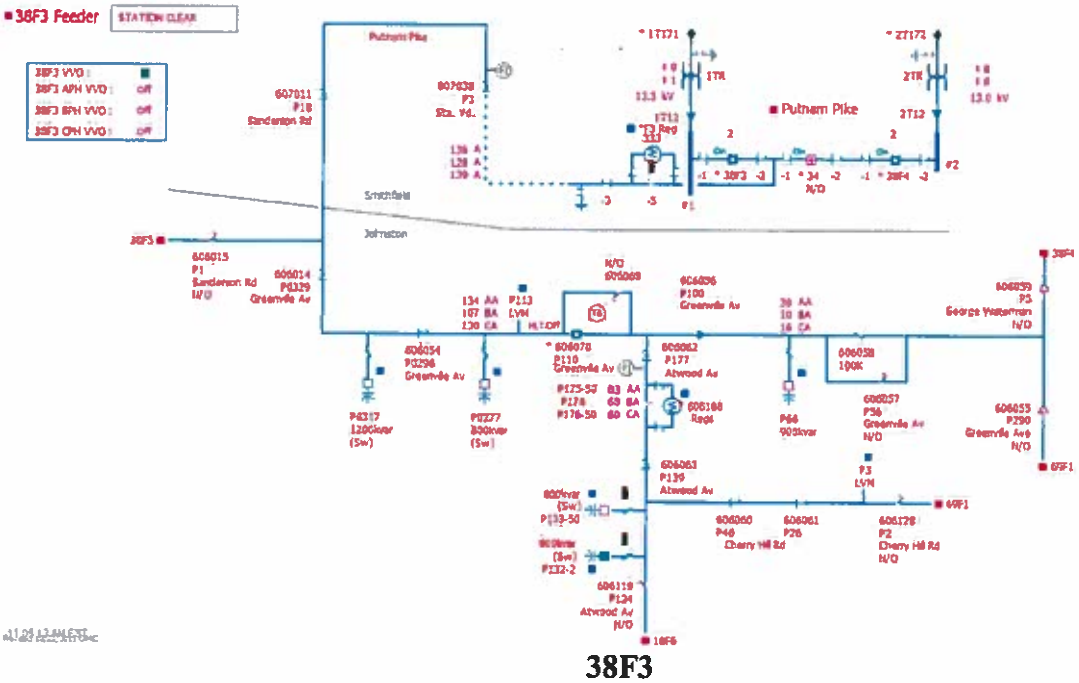

38F3

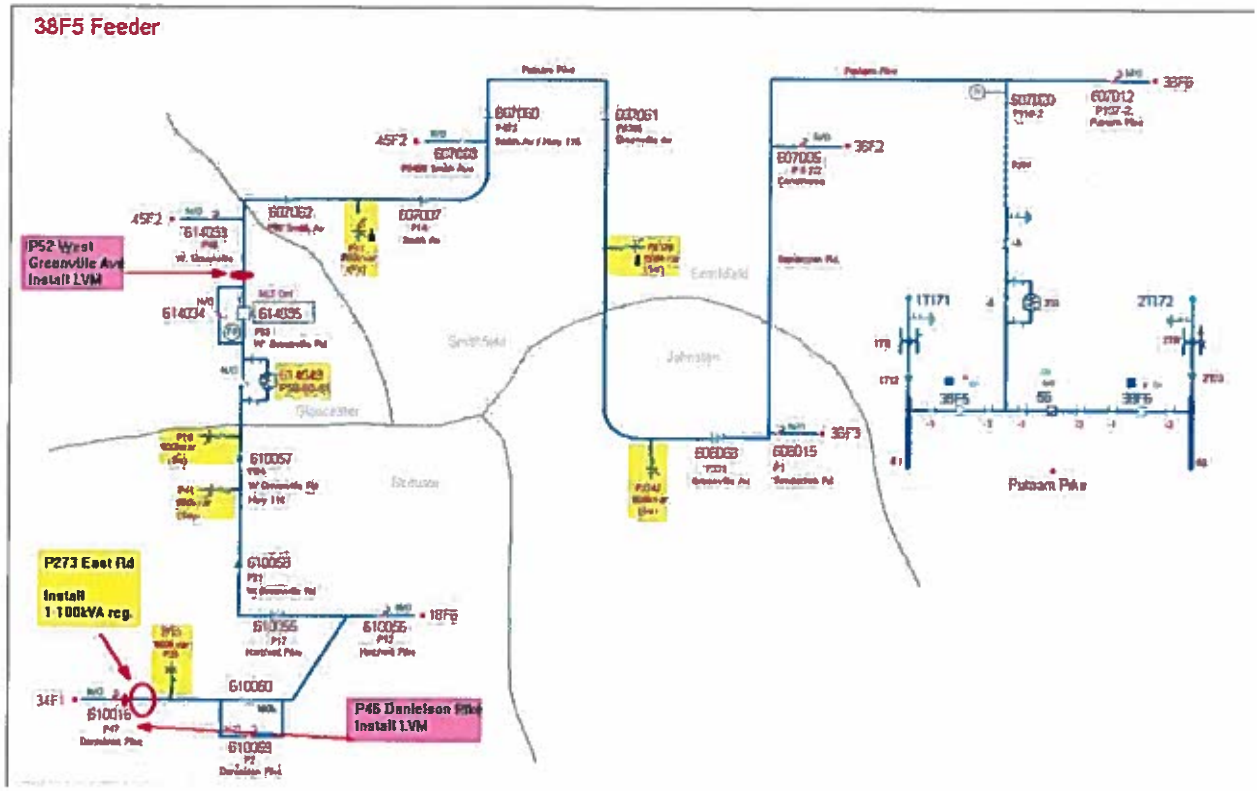
38F5 Feeder
P52 West Greenville Ave Install LVM
P273 East Rd Install 1-100kVA reg.
P45 Danielson Pike Install LVM
38F2
38F3
38F6
Putnam Pike

38F5

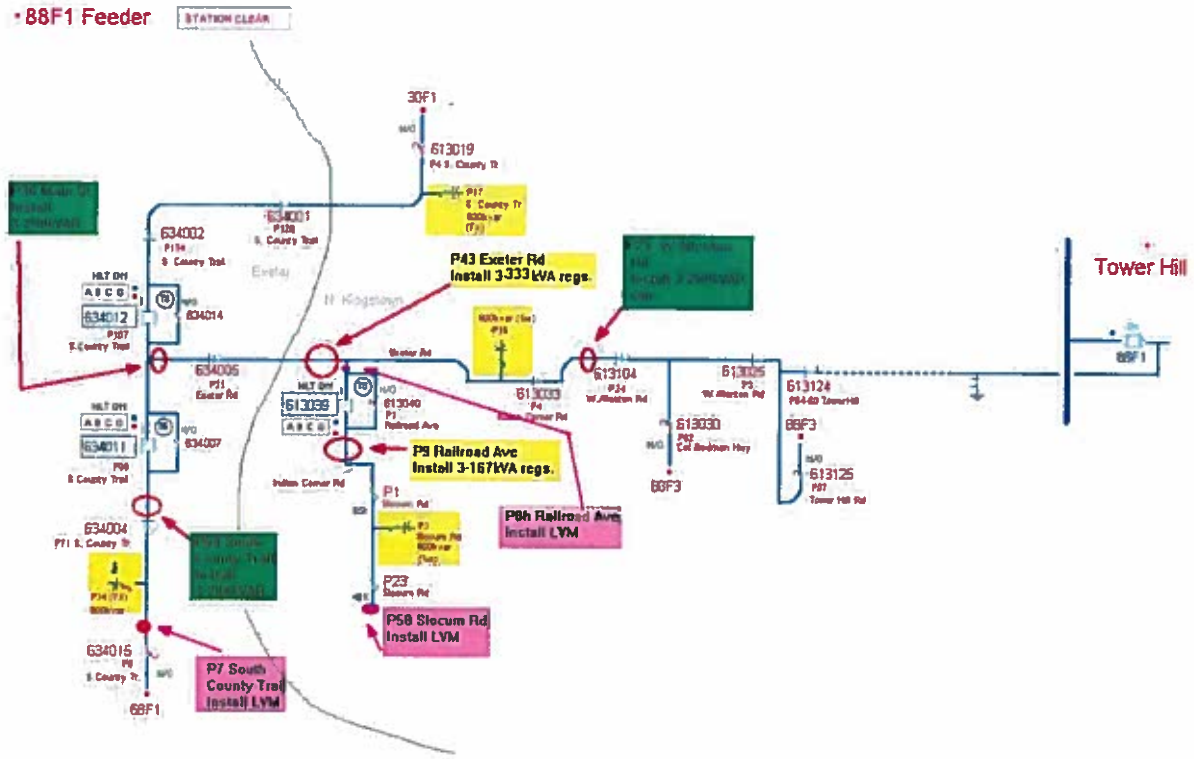
88F1 Feeder
P43 Exeter Rd Install 3-333kVA regs.
P9 Railroad Ave Install 3-167kVA regs.
P8h Railroad Ave Install LVM
P58 Stocum Rd Install LVM
P7 South County Trail Install LVM
Tower Hill

88F1

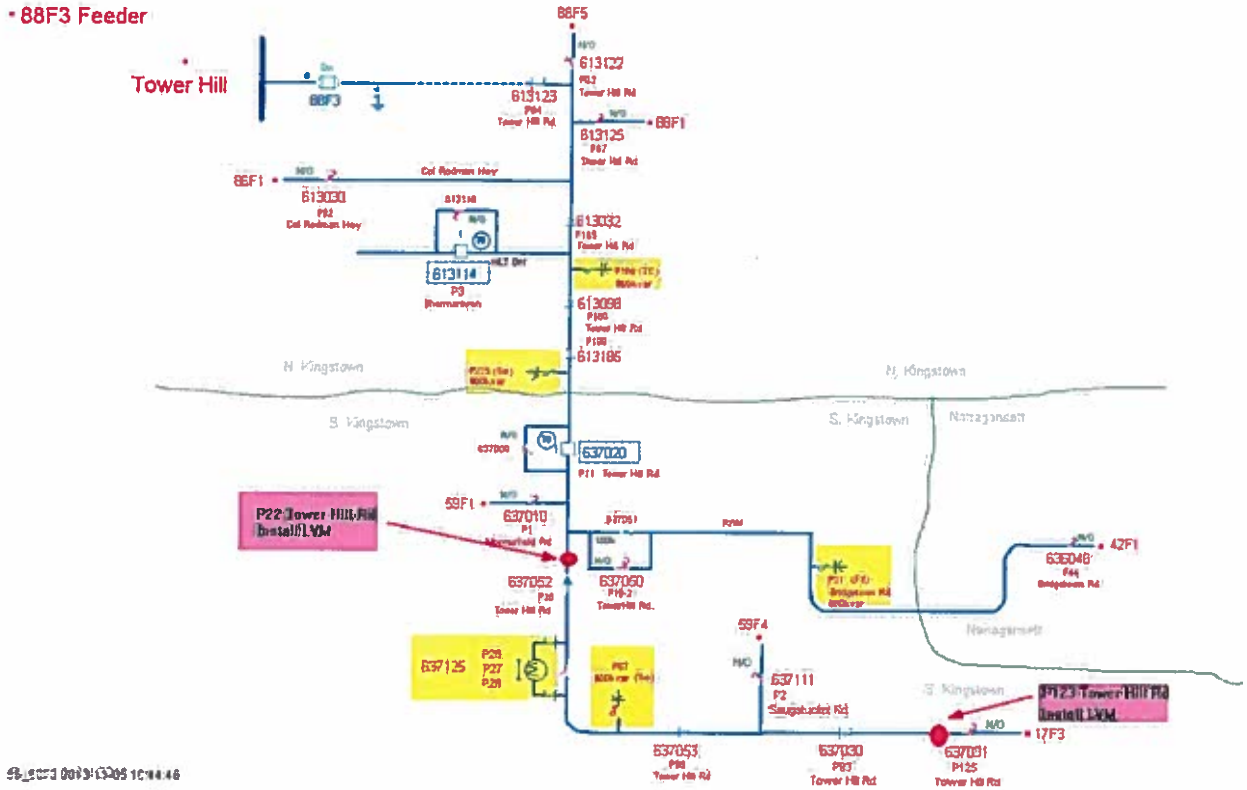
88F3 Feeder
Tower Hill
88F5
613122
613123
88F1
613125
86F1
613030
613032
613114
613098
613185
N. Kingstown
S. Kingstown
Narragansett
637020
59F1
637010
P22 Tower Hill Rd Install LVM
637052
637060
636048
42F1
59F4
637125
637111
P123 Tower Hill Rd Install LVM
17F3
637053
637030
637031

88F3

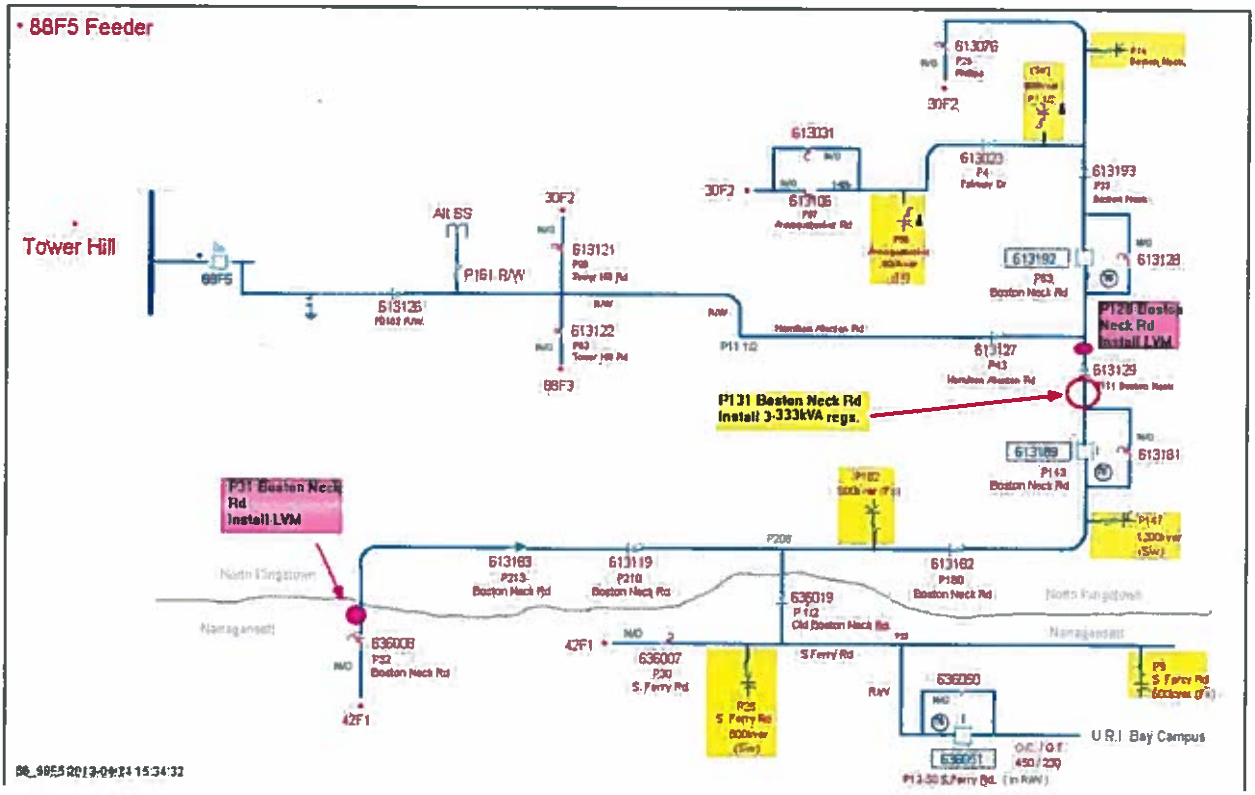
88F5 Feeder
Tower Hill
88F5
Alt SS
30F2
613121
P161 R/W
613126
613122
88F3
613076
30F2
613031
613106
613023
613193
613192
613128
P128 Boston Neck Rd Install LVM
613127
613129
P131 Boston Neck Rd Install 3-333kVA regs.
613189
613181
P31 Boston Neck Rd Install LVM
613163
613119
613162
636019
636008
42F1
636007
636060
636051
U.R.I. Bay Campus

88F5

Short Form Sanction Paper

nationalgrid

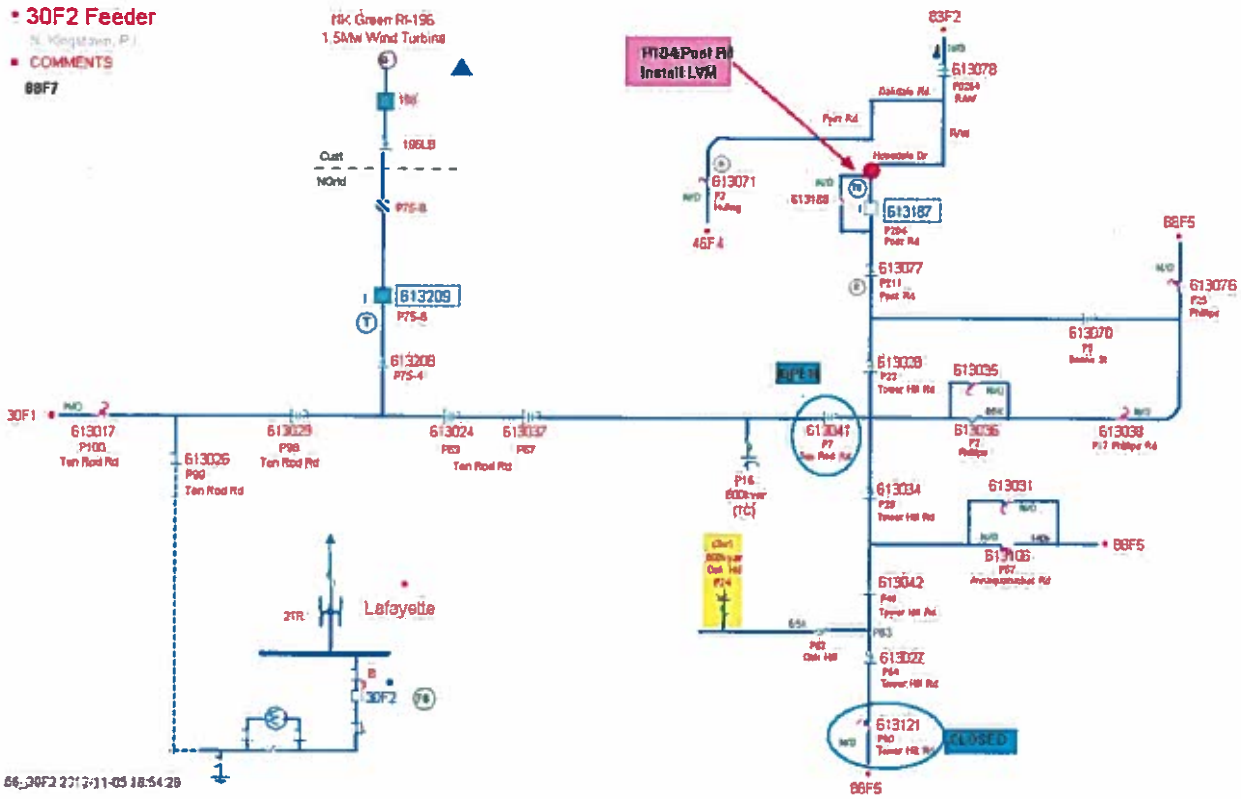

88F7



REDACTED

Short Form Sanction Paper

nationalgrid

Title:	Volt Var Optimization Demonstration Project	**Sanction Paper #:**	USSC-14-009 v3
Project #:	C046352, C052708, C053111/INVP 3752	**Sanction Type:**	Partial Sanction
Operating Company:	The Narragansett Electric Co.	**Date of Request:**	June 23, 2015
Author:	John Skrzypczak	**Sponsor:**	John E. Gavin Vice President Asset Management
Utility Service:	Electricity T&D	**Project Manager:**	John Skrzypczak

1 Executive Summary

1.1 Sanctioning Summary

This paper requests partial sanction of projects C046352, C052708, and C053111 in the amount $4.239M with a tolerance of +/- 10% for the purposes of final engineering, procurement of materials, IS implementation and design and construction activities.

The sanction amount is $4.239M broken down into:

$3.805M	CapEx
$0.377M	OpEx
$0.057M	Removal

NOTE the potential investment of $4.913M with a tolerance of +/- 25%, contingent upon submittal and approval of a Project Sanction paper following completion of IS implementation and design.

1.2 Project Summary

Through these projects, National Grid will pursue a Volt VAR Optimization (VVO) Demonstration Project in the state of Rhode Island. National Grid has selected Utilidata to supply centralized control functionality designed to optimize the operation of existing and new reactive resources as well as various voltage regulation devices on seven distribution feeders selected for the demonstration project.

2 Project Detail

2.1 Project Description

Please note that the results of the [redacted] RF study may have an impact on the Distribution Line design and associated costs.

Infrastructure Development

Table 1 shows Putnam Pike distribution infrastructure development, which includes the installation of voltage regulators, capacitor banks, and step-down transformer removals/installations and associated area voltage conversion. The area voltage conversion calls for one 4kV voltage regulator to be removed and approximately 4200 circuit feet to be converted to 12.47kV.

The Putnam Pike substation regulator controllers will be replaced with Beckwith M-2001D units, which meet current standards and enables device supervisory control.

Putnam Pike	Line Regulators	Step-down Transformers	Capacitor Banks	Cap Controls (SEL 734B)	Convert (mi)	Load Balancing
Install	9		4			
Remove	1					
Replace	3	3		11	0.80	20

TABLE 1: PUTNAM PIKE ASSETS

Table 2 shows the recommended Tower Hill distribution infrastructure development which includes the installation of voltage line regulators and capacitor banks. There is no recommended work at the substation.

Tower Hill	Line Regulators	Step-down Transformers	Capacitor Banks	Cap Controls (SEL 734B)	Convert (mi)	Load Balancing
Install	9		3			
Remove						
Replace				16		23

TABLE 2: TOWER HILL ASSETS

Table 3 summarizes the total infrastructure development on the circuits out of Putnam Pike and Tower Hill substations. Figures 1-5 shows electrical one-lines of specific asset locations for the various feeders involved in the demonstration project.

Total	Line Regulators	Step-down Transformers	Capacitor Banks	Cap Controls (SEL 734B)	Convert (mi)	Load Balancing

Total	Line Regulators	Step-down Transformers	Capacitor Banks	Cap Controls (SEL 734B)	Convert (mi)	Load Balancing
Install	18		7			
Remove	1					
Replace	3	3		27	0.80	43

TABLE 3: TOTAL ASSETS

IS Scope

- Survey and design for establishing radio network between 40 field devices in Putnam pike (Line Voltage regulators, Line Voltage monitors and Capacitor bank controllers) with [redacted] station.
- Establish Multi-Protocol Label Switch (MPLS) network connectivity between [redacted] station and Northborough data center [redacted] server location.
- Establish authentication mechanism for the radios using existing Smart grid Authentication servers.
- 1 router/1 Out of Band at each Nooseneck and Peck Hill towers to support the new circuit
- Establish MPLS network connectivity from Tower Hill and Putnam Pike substations to Northborough data center / [redacted] server location.
- Installation of [redacted] software and testing connectivity between systems (hardware installation and commissioning being managed by Engineering team and configuration [redacted]), setting up ESP network for [redacted] server components in data center.
- Establish network connectivity between the National Grid EMS Network and [redacted] system.
- Implement Secure Shell File Transfer Protocol to facilitate the (daily or weekly) transfer data [redacted] for Measurement & Verification analysis.
- Provide access to Engineering and [redacted] users for support and maintenance of field devices, [redacted] System, and network devices through the IPSEC VPM .
- Track potential benefits from deployment and infrastructure development costs to enable future system planning.

2.2 Benefits

The benefits of distribution feeder reactive support and voltage regulation are well known and individual capacitor installations and voltage regulators can be justified to maintain service voltage within required limits and to release capacity on T&D assets. It is believed that a more refined control system will allow the Company to meet its service quality requirements while reducing system losses and reducing customer energy consumption. However, National Grid has not yet evaluated the potential for achieving

these additional benefits to be derived from advanced VVO control systems and strategies utilizing centralized control algorithms.

This project is recommended at this time for the following reasons:

- To quantify the potential operational benefits from these systems as stated by the manufacturer in order to improve service to National Grid customers
- To understand potential synergies with other rapidly developing uses of advanced technology on power distribution systems
- To understand how application of these systems could be integrated with existing guidelines to meet current objectives for volt/VAR infrastructure
- To guide system planners on potential benefits from this type of deployment
- To understand system performance when distribution is out of normal configuration

Direct benefits the demonstration project seeks to quantify are as follows:

- Reduction in system losses
- Reduction in customer energy use
- Improvement in voltage performance
- Reduction in feeder demand
- Improved flexibility to meet NE ISO pf performance
- Improved planning & operations capability as a result of increased system performance monitoring

The criteria used for selecting the distribution feeders that are proposed in the demonstration project are as follows:

- 15kV feeder class
- Some level of existing automation Energy Management System (EMS) at substation
- Existing Line capacitors
- At least one set of line regulators on a feeder served by a target substation

Table 4 shows the characteristics of an average Rhode Island feeder with comparison to the feeders that were selected. The selected feeders tended to be longer than the average feeder due to the desire to evaluate a feeder that had distribution line regulators installed.

VVO Feeder Selection Analysis	# of Feeders		Customers	Total Miles	OH Miles	UG Miles	3Ph OH Miles	Cap Banks	kVAR	3PH Line Regs
RI 15 kV Averages	222		1,789	23.8	20.1	3.8	7.9	3.6	2,804.8	0.09

VVO Feeder Selection Analysis	# of Feeders		Customers	Total Miles	OH Miles	UG Miles	3Ph OH Miles	Cap Banks	kVAR	3PH Line Regs
RI Target Sample Averages	51		2,031	38.0	32.1	5.9	11.3	4.3	3,066.7	0.37
Test Sample Averages	7		2,286	47.5	40.4	6.6	13.8	4.9	3,800.0	0.4
Test Sample Totals	7		16,000	332.1	282.5	46.3	96.9	34.0	26,600.0	3.00

TABLE 4: VVO SELECTION ANALYSIS

The selected feeders for this demonstration project are Putnam Pike 38F1, 38F3, 38F5 in the northern area. In the southern area Tower Hill 88F1, 88F3, 88F5, and the 88F7 were selected. Although the 88F7 feeder is not yet in service, Its circuit characteristics were assembled from the portions of existing circuits (including the Lafayette substation feeder 30F2) that will be used to establish its normal configuration.

Required infrastructure development was determined to address existing concerns related to thermal, voltage, and reactive performance before advanced VVO could be executed.

2.3 Business & Customer Issues

2.4 Alternatives

Alternative 1: Do Nothing

This solution was rejected after a comprehensive project study report was completed to evaluate the benefits of current National Grid volt VAR management methods versus this proposed advanced volt VAR management solution with two-way communications and a centralized algorithm controlling voltage regulators and capacitor banks. The results of this report were presented to internal stakeholders as well as the Rhode Island Public Utilities Commission staff. Note, the internal study recommended pursuing this project's advanced volt var management solution in lieu of remaining with the currently used method.

2.5 Investment Recovery

Investment Recovery will be through standard rate recovery mechanisms.

2.5.1 Customer Impact

This project results in an indicative first full year revenue requirement when the asset is placed in service equal to approximately $0.888M. This is indicative only. The actual revenue requirement will differ, depending upon the timing of the next rate case and/or the timing of the next filing in which the project is included in rate base.

3 Related Projects, Scoring, Budgets

3.1 Summary of Projects

Project Number	Project Type (Elec only)	Project Title	Estimate Amount ($M)
C046352	D-Line	VVO Pilot Distribution	3.423
C052708	D-Sub	VVO Pilot Substation	0.207
C053111	IS	VVO Pilot IS	1.283
		Total	4.913

3.2 Associated Projects

N/A

3.3 Prior Sanctioning History

Describe previous sanctions for the projects included in the scope of this paper (Newest to Oldest).

Date	Governance Body	Sanctioned Amount	Potential Project Investment	Paper Title	Sanction Type	Tolerance
11/04/2014	**USSC**	**$3.000M**	**$4.795M**	Volt Var Optimization Demonstration Project	**Partial**	**+-25%**
01/14/2014	**USSC**	**$1.200M**	**$4.232M**	Volt Var Optimization Demonstration Project	**Partial**	**+-25%**
12/03/2013	**Powerplant**	**$0.500M**	**N/A**	Volt Var Optimization Demonstration Project	**Rob Sheridan, DOA**	**+50% -25%**

3.4 Category

Category	Reference to Mandate, Policy, NPV, or Other
○ Mandatory	
◉ Policy- Driven	Advanced Volt Var Management
○ Justified NPV	
○ Other	

3.5 Asset Management Risk Score

Asset Management Risk Score: 36

Primary Risk Score Driver: (Policy Driven Projects Only)

◉ Reliability ○ Environment ○ Health & Safety ○ Not Policy Driven

3.6 Complexity Level

○ High Complexity ◉ Medium Complexity ○ Low Complexity ○ N/A

Complexity Score: 25

3.7 Next Planned Sanction Review

Date (Month/Year)	Purpose of Sanction Review
12/2015	Project Sanction

4 Financial

4.1 Business Plan

Business Plan Name & Period	Project included in approved Business Plan?	Over / Under Business Plan	Project Cost relative to approved Business Plan ($)
FY16-20 NE Distribution Capital Plan	◉ Yes ○ No	◉ Over ○ Under ○ NA	$0.940M

4.1.1 If cost > approved Business Plan how will this be funded?

Re-allocation of funds within the portfolio will be managed by the Business Support Manager to meet jurisdictional budgetary, statutory and regulatory requirements.

4.2 CIAC / Reimbursement

N/A

4.3 Cost Summary Table

Project Number	Project Title	Project Estimate Level (%)	Spend	Prior Yrs	Current Planning Horizon ($M) Yr. 1 2015/16	Yr. 2 2016/17	Yr. 3 2017/18	Yr. 4 2018/19	Yr. 5 2019/20	Yr. 6 + 2019/20	Total
C046352	VVO Pilot Distribution	Est Lvl (e.g. +/- 10%)	CapEx	1.509	0.872	0.752	-	-	-	-	3.133
			OpEx	0.114	0.083	0.024	-	-	-	-	0.221
			Removal	0.012	0.033	0.024	-	-	-	-	0.069
			Total	1.635	0.988	0.800	-	-	-	-	3.423
C052708	VVO Pilot Substation	Est Lvl (e.g. +/- 10%)	CapEx	0.166	0.041	-	-	-	-	-	0.207
			OpEx	-	-	-	-	-	-	-	-
			Removal	-	-	-	-	-	-	-	-
			Total	0.166	0.041	-	-	-	-	-	0.207
C053111	VVO Pilot IS	Est Lvl (e.g. +/- 10%)	CapEx	0.397	0.602	0.100	-	-	-	-	1.099
			OpEx	0.172	0.005	-	-	-	-	-	0.177
			Removal	0.007	-	-	-	-	-	-	0.007
			Total	0.576	0.607	0.100	-	-	-	-	1.283
Total Project Sanction			CapEx	2.072	1.515	0.852	-	-	-	-	4.439
			OpEx	0.286	0.088	0.024	-	-	-	-	0.398
			Removal	0.019	0.033	0.024	-	-	-	-	0.076
			Total	2.377	1.636	0.900	-	-	-	-	4.913

*Note there is a recurring annual IS OpEx cost of $0.289M starting in FY15 for maintaining Security, Network WAN components, [redacted] units, servers, hardware, and software licensing.

4.4 Project Budget Summary Table

Project Costs per Business Plan

$M	Prior Yrs (Actual)	Current Planning Horizon ($M) Yr. 1 2015/16	Yr. 2 2016/17	Yr. 3 2017/18	Yr. 4 2018/19	Yr. 5 2019/20	Yr. 6 + 2020/21	Total
CapEx	2.072	1.464	0.000	0.000	0.000	0.000	0.000	3.536
OpEx	0.286	0.066	0.000	0.000	0.000	0.000	0.000	0.352
Removal	0.019	0.066	0.000	0.000	0.000	0.000	0.000	0.085
Total Cost in Bus. Plan	2.377	1.596	0.000	0.000	0.000	0.000	0.000	3.973

Variance (Business Plan-Project Estimate)

$M	Prior Yrs (Actual)	Current Planning Horizon ($M) Yr. 1 2015/16	Yr. 2 2016/17	Yr. 3 2017/18	Yr. 4 2018/19	Yr. 5 2019/20	Yr. 6 + 2020/21	Total
CapEx	0.000	(0.051)	(0.852)	0.000	0.000	0.000	0.000	(0.903)
OpEx	0.000	(0.022)	(0.024)	0.000	0.000	0.000	0.000	(0.046)
Removal	0.000	0.033	(0.024)	0.000	0.000	0.000	0.000	0.009
Total Cost in Bus. Plan	0.000	(0.040)	(0.900)	0.000	0.000	0.000	0.000	(0.940)

REDACTED

5 Key Milestones

Milestone	Target Date: (Month/Year)
Partial Sanction	01/2014
Construction Start	07/2014
Partial Sanction	06/2015
IS Construction and implementation Complete - CC	09/2015
Final Engineering Complete	11/2015
Project Sanction	12/2015
Construction Complete	09/2016
Project Closure	02/2017

6 Statements of Support

6.1.1 Supporters

The supporters listed have aligned their part of the business to support the project.

Role	Individual	Responsibilities
Investment Planner	Park, Michelle	Endorses relative to 5-year business plan or emergent work
Resource Planning	Wyman, Anne	Endorses Resources, cost estimate, schedule, and Portfolio Alignment
Asset Management / Planning	Labarre, Alan T.	Endorses scope, estimate, and schedule with the company's goals, strategies, and objectives
Project Management	Schneller, Andrew	Endorses Resources, cost estimate, schedule
Business Relationship Manager	Aneja, Aman	For respective portfolio only: 1. Review & Endorse IS Investment Proposals 2. Ensure IS Stakeholders approvals are obtained

6.1.2 Reviewers

The reviewers have provided feedback on the content/language of the paper.

Reviewer List	Individual
Finance (Dist)	Fowler, Keith
Finance (IS)	Benson, Chip
Regulatory	Zschokke, Peter
Jurisdictional Delegates	Patterson, Jim
Control Center	Gallagher, Michael
Procurement	Curran, Art

7 *Decisions*

I:

(a) APPROVE the investment of $4.239M and a tolerance of +/- 10% for purposes of final engineering, procurement of materials, IS implementation and construction activities

(b) NOTE the potential investment of $4.913M and a tolerance of +/-25%, contingent upon submittal and approval of a Project Sanction paper following completion of IS implementation and design.

(c) NOTE that John Skrzypczak is the Project Manager and has the approved financial delegation to undertake the activities stated in (a).

Signature.....Date.....6/23/2015

Executive Sponsor – Ross Turrini, Acting Senior Vice President, Network Strategy

8 Other Appendices

8.1 Sanction Request Breakdown by Project

$M	C046352	C052708	C053111	Total
CapEx	2.500	0.207	1.098	3.805
OpEx	0.200	0.000	0.177	0.377
Removal	0.050	0.000	0.007	0.057
Total	2.750	0.207	1.282	4.239

8.2 Figures

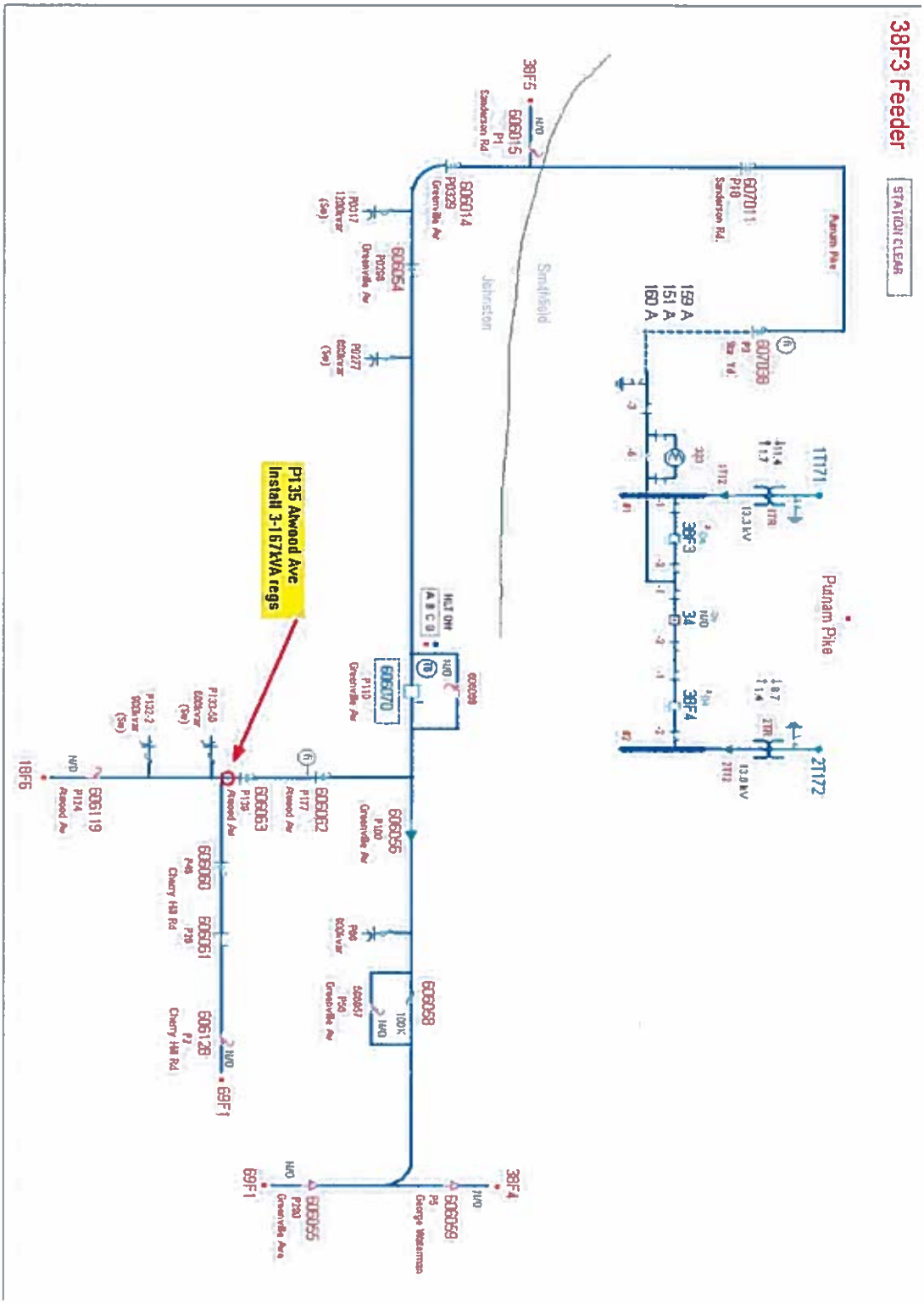
38F3 Feeder
STATION CLEAR
Putnam Pike
Smithfield
Johnston
P135 Atwood Ave
Install 3-167kVA regs
1T171
2T172
38F3
38F4
38F5
18F6
69F1
607011
607038
606015
606014
606054
606070
606056
606058
606062
606063
606060
606061
606128
606119
606055
606059
159 A
151 A
160 A

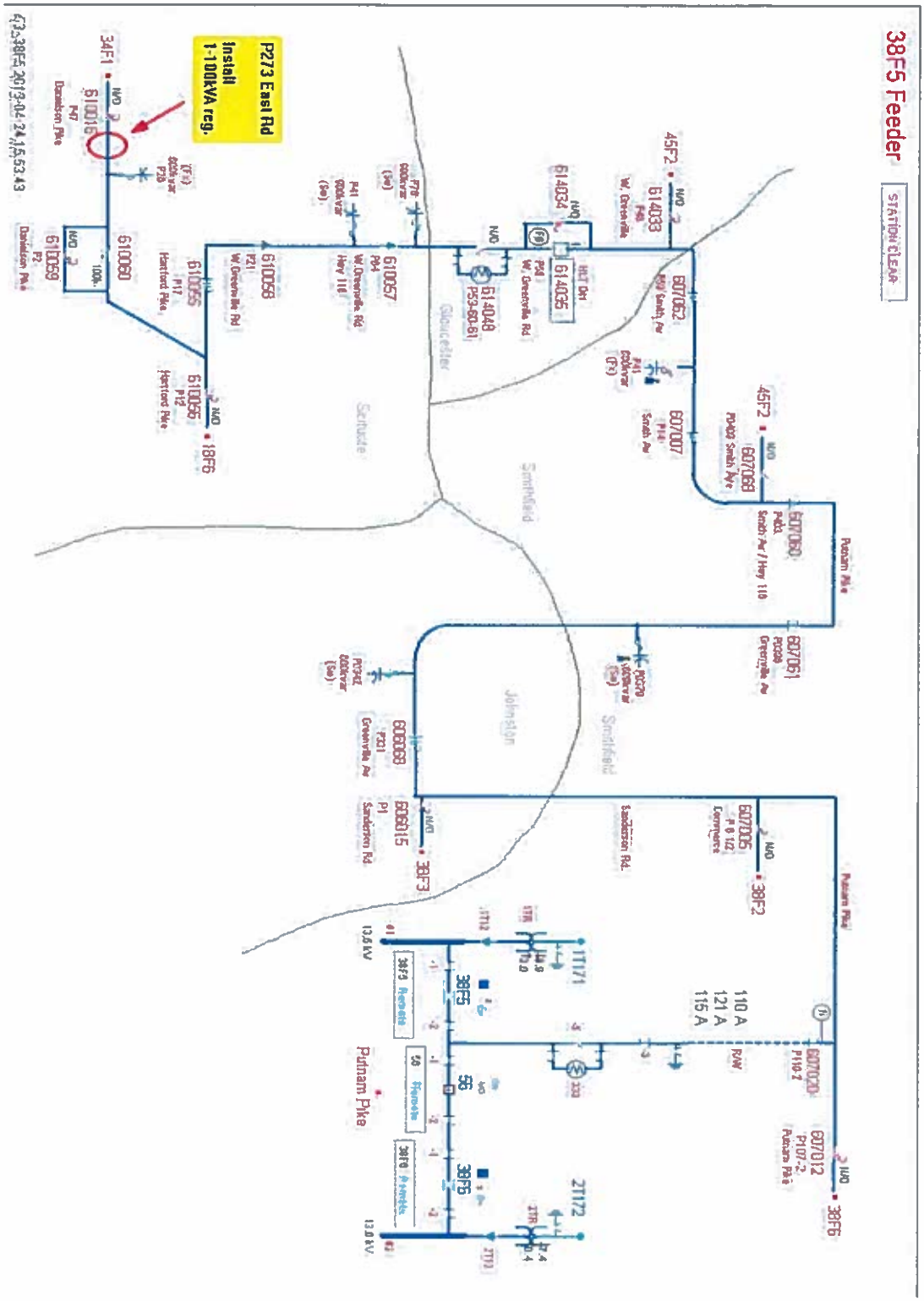
38F5 Feeder
STATION CLEAR
P273 East Rd
Install
1-100kVA reg.
Putnam Pike
Smithfield
Johnston
Gloucester
Scituate
110 A
121 A
115 A
38F5
38F6
38F2
38F3
45F2
34F1
18F6
1T171
2T172
13.5 kV
13.0 kV

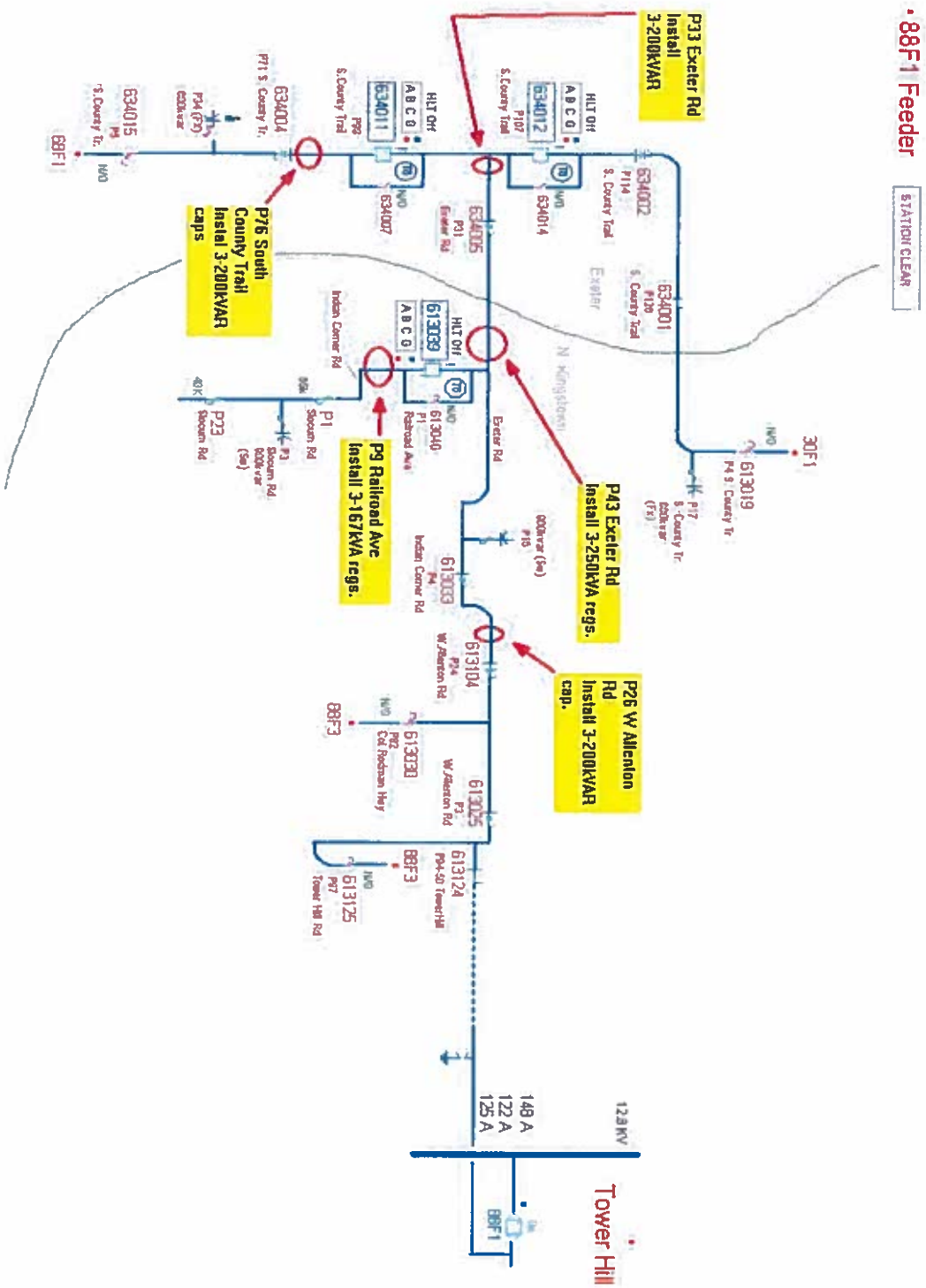
88F1 Feeder
STATION CLEAR
P33 Exeter Rd
Install
3-200kVAR
P76 South
County Trail
Instal 3-200kVAR
caps
P9 Railroad Ave
Install 3-167kVA regs.
P43 Exeter Rd
Install 3-250kVA regs.
P26 W Allenton
Rd
Install 3-200kVAR
cap.
Tower Hill
12.5 KV
148 A
122 A
125 A

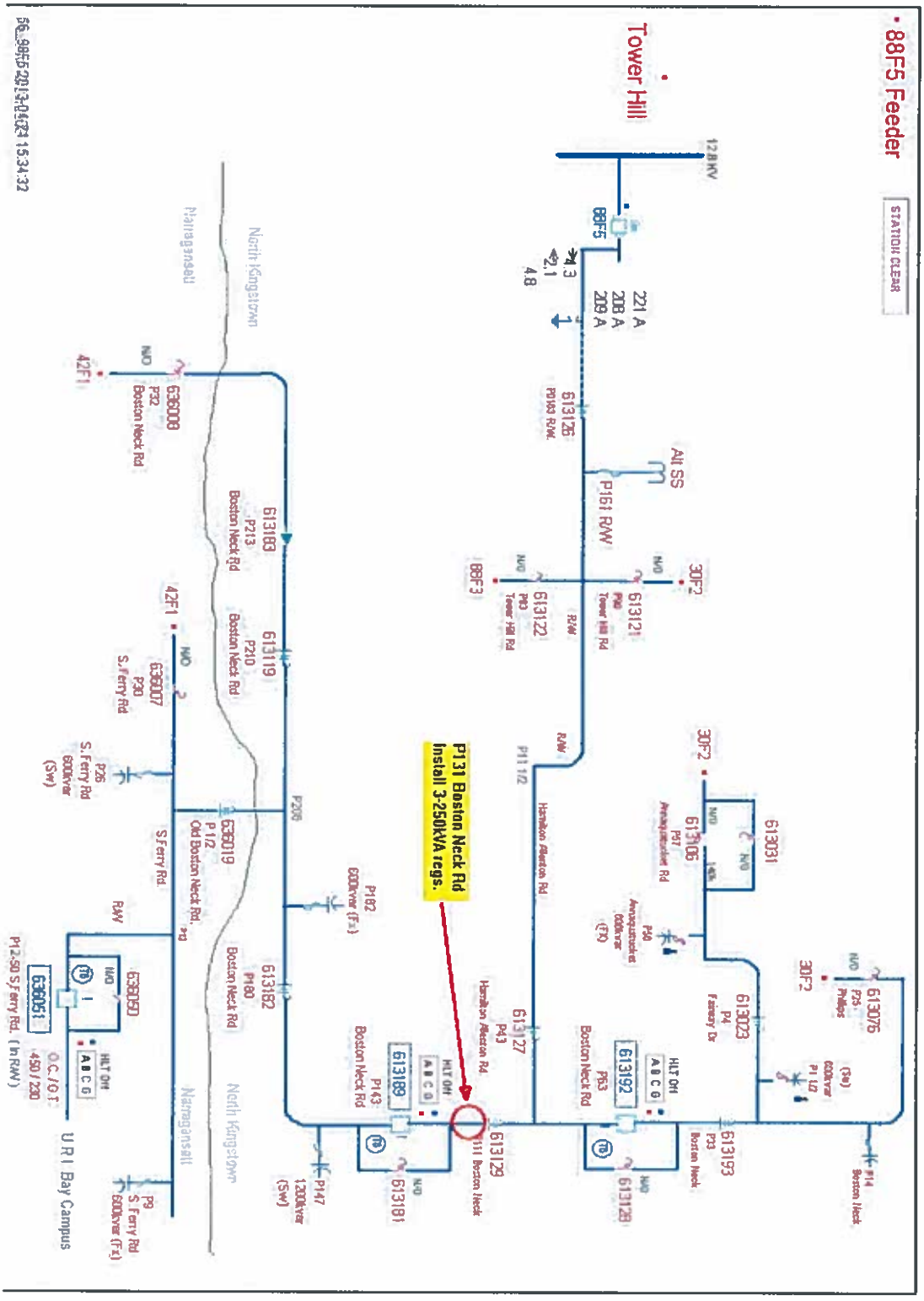
88F5 Feeder
Tower Hill
STATION CLEAR
12.8 KV
88F5
221 A
208 A
209 A
613126
P161 R/W
All SS
30F2
88F3
613121
613122
P131 Boston Neck Rd
Install 3-250kVA regs.
613031
613106
613076
613023
613192
613193
613128
613127
613129
613189
613181
613182
613119
613183
636008
42F1
636007
636019
636050
636051
North Kingstown
Narragansett
U R I Bay Campus

Short Form Sanction Paper

nationalgrid

[redacted]

D+Ts

Short Form Sanction Paper

nationalgrid

Title:	Volt Var Optimization Demonstration Project	**Sanction Paper #:**	USSC-14-009 v2
Project #:	C046352, C052708, C053111/INVP 3752	**Sanction Type:**	Partial Sanction
Operating Company:	The Narragansett Electric Co.	**Date of Request:**	November 4, 2014
Author:	John Skrzypczak	**Sponsor:**	John E. Gavin Vice President Asset Management
Utility Service:	Electricity T&D	**Project Manager:**	John Skrzypczak & Keir McIntyre

1 Executive Summary

1.1 Sanctioning Summary

This paper requests partial sanction of projects C046352, C052708, and C053111 in the amount $3.000M with a tolerance of +/- 10% for the purposes of final engineering, procurement of materials, IS implementation and design and construction activities.

The sanction amount is $3.000M broken down into:

$2.900M	CapEx
$0.050M	OpEx
$0.050M	Removal

NOTE the potential investment of $4.795M with a tolerance of +/- 25%, contingent upon submittal and approval of a Project Sanction paper following completion of IS implementation and design.

1.2 Project Summary

Through these projects, National Grid will pursue a Volt VAR Optimization (VVO) Demonstration Project in the state of Rhode Island. National Grid has selected Utilidata to supply centralized control functionality designed to optimize the operation of existing and new reactive resources as well as various voltage regulation devices on seven distribution feeders selected for the demonstration project.

2 Project Detail

2.1 Project Description

Please note that the results of the [redacted] study may have an impact on the Distribution Line design and associated costs.

Infrastructure Development

Table 1 shows Putnam Pike distribution infrastructure development, which includes the installation of voltage regulators, capacitor banks, and step-down transformer removals/installations and associated area voltage conversion. The area voltage conversion calls for one 4kV voltage regulator to be removed and approximately 4200 circuit feet to be converted to 12.47kV.

The Putnam Pike substation regulator controllers will be replaced with Beckwith M-2001D units, which meet current standards and enables device supervisory control.

Putnam Pike	Line Regulators	Step-down Transformers	Capacitor Banks	Cap Controls (SEL 734B)	Convert (mi)	Load Balancing
Install	9		4			
Remove	1					
Replace	3	3		11	0.80	20

TABLE 1: PUTNAM PIKE ASSETS

Table 2 shows the recommended Tower Hill distribution infrastructure development which includes the installation of voltage line regulators and capacitor banks. There is no recommended work at the substation.

Tower Hill	Line Regulators	Step-down Transformers	Capacitor Banks	Cap Controls (SEL 734B)	Convert (mi)	Load Balancing
Install	9		3			
Remove						
Replace				16		23

TABLE 2: TOWER HILL ASSETS

Table 3 summarizes the total infrastructure development on the circuits out of Putnam Pike and Tower Hill substations. Figures 1-5 shows electrical one-lines of specific asset locations for the various feeders involved in the demonstration project.

Total	Line Regulators	Step-down Transformers	Capacitor Banks	Cap Controls (SEL 734B)	Convert (mi)	Load Balancing
Install	18		7			
Remove	1					
Replace	3	3		27	0.80	43

TABLE 3: TOTAL ASSETS

IS Scope

- Survey and design for establishing radio network between 40 field devices in Putnam pike (Line Voltage regulators, Line Voltage monitors and Capacitor bank controllers) with [redacted] station.
- Establish Multi-Protocol Label Switch (MPLS) network connectivity between [redacted] station and Northborough data center / [redacted] server location.
- Establish authentication mechanism for the radios using existing Smart grid Authentication servers.
- 1 router/1 Out of Band at each Nooseneck and Peck Hill towers to support the new circuit
- Establish MPLS network connectivity from Tower Hill and Putnam Pike substations to Northborough data center / [redacted] server location.
- Installation of [redacted] software and testing connectivity between systems (hardware installation and commissioning being managed by Engineering team and configuration [redacted]), setting up ESP network for [redacted] server components in data center.
- Establish network connectivity between the National Grid EMS Network and [redacted] system.
- Implement Secure Shell File Transfer Protocol to facilitate the (daily or weekly) transfer data [redacted] for Measurement & Verification analysis.
- Provide access to Engineering and [redacted] users for support and maintenance of field devices, [redacted] System, and network devices through the IPSEC VPM .
- Track potential benefits from deployment and infrastructure development costs to enable future system planning.

2.2 Benefits

The benefits of distribution feeder reactive support and voltage regulation are well known and individual capacitor installations and voltage regulators can be justified to maintain service voltage within required limits and to release capacity on T&D assets. It is believed that a more refined control system will allow the Company to meet its service quality requirements while reducing system losses and reducing customer energy consumption. However, National Grid has not yet evaluated the potential for achieving these additional benefits to be derived from advanced VVO control systems and strategies utilizing centralized control algorithms.

This project is recommended at this time for the following reasons:

- To quantify the potential operational benefits from these systems as stated by the manufacturer in order to improve service to National Grid customers
- To understand potential synergies with other rapidly developing uses of advanced technology on power distribution systems
- To understand how application of these systems could be integrated with existing guidelines to meet current objectives for volt/VAR infrastructure
- To guide system planners on potential benefits from this type of deployment
- To understand system performance when distribution is out of normal configuration

Direct benefits the demonstration project seeks to quantify are as follows:

- Reduction in system losses
- Reduction in customer energy use
- Improvement in voltage performance
- Reduction in feeder demand
- Improved flexibility to meet NE ISO pf performance
- Improved planning & operations capability as a result of increased system performance monitoring

The criteria used for selecting the distribution feeders that are proposed in the demonstration project are as follows:

- 15kV feeder class
- Some level of existing automation Energy Management System (EMS) at substation
- Existing Line capacitors
- At least one set of line regulators on a feeder served by a target substation

Table 4 shows the characteristics of an average Rhode Island feeder with comparison to the feeders that were selected. The selected feeders tended to be longer than the average feeder due to the desire to evaluate a feeder that had distribution line regulators installed.

VVO Feeder Selection Analysis	# of Feeders		Customers	Total Miles	OH Miles	UG Miles	3Ph OH Miles	Cap Banks	kVAR	3PH Line Regs
RI 15 kV Averages	222		1,789	23.8	20.1	3.8	7.9	3.6	2,804.8	0.09
RI Target Sample Averages	51		2,031	38.0	32.1	5.9	11.3	4.3	3,066.7	0.37

VVO Feeder Selection Analysis	# of Feeders		Customers	Total Miles	OH Miles	UG Miles	3Ph OH Miles	Cap Banks	kVAR	3PH Line Regs
Test Sample Averages	7		2,286	47.5	40.4	6.6	13.8	4.9	3,800.0	0.4
Test Sample Totals	7		16,000	332.1	282.5	46.3	96.9	34.0	26,600.0	3.00

TABLE 4: VVO SELECTION ANALYSIS

The selected feeders for this demonstration project are Putnam Pike 38F1, 38F3, 38F5 in the northern area. In the southern area Tower Hill 88F1, 88F3, 88F5, and the 88F7 were selected. Although the 88F7 feeder is not yet in service, Its circuit characteristics were assembled from the portions of existing circuits (including the Lafayette substation feeder 30F2) that will be used to establish its normal configuration.

Required infrastructure development was determined to address existing concerns related to thermal, voltage, and reactive performance before advanced VVO could be executed.

2.3 Alternatives

Alternative 1: Do Nothing

This solution was rejected after a comprehensive project study report was completed to evaluate the benefits of current National Grid volt VAR management methods versus this proposed advanced volt VAR management solution with two-way communications and a centralized algorithm controlling voltage regulators and capacitor banks. The results of this report were presented to internal stakeholders as well as the Rhode Island Public Utilities Commission staff. Note, the internal study recommended pursuing this project's advanced volt var management solution in lieu of remaining with the currently used method.

2.4 Investment Recovery

Investment Recovery will be through standard rate recovery mechanisms.

2.4.1 Customer Impact

This project results in an indicative first full year revenue requirement when the asset is placed in service equal to approximately $0.827M. This is indicative only. The actual

revenue requirement will differ, depending upon the timing of the next rate case and/or the timing of the next filing in which the project is included in rate base.

3 *Related Projects, Scoring, Budgets*

3.1 Summary of Projects

Project Number	Project Type (Elec only)	Project Title	Estimate Amount ($M)
C046352	D-Line	VVO Pilot Distribution	3.011
C052708	D-Sub	VVO Pilot Substation	0.176
C053111	IS	VVO Pilot IS	1.608
		Total	4.795

3.2 Associated Projects

N/A

3.3 Prior Sanctioning History

Date	Governance Body	Sanctioned Amount	Paper Title	Sanction Type
01/14/2014	USSC	$1.200 M	Volt Var Optimization Demonstration Project	Partial Sanction
12/03/2013	Power Plant	$0.500 M	Volt Var Optimization Demonstration Project	Rob Sheridan, DOA

3.4 Category

Category	Reference to Mandate, Policy, NPV, or Other
○ Mandatory	
◉ Policy- Driven	
○ Justified NPV	
○ Other	

3.5 Asset Management Risk Score

Asset Management Risk Score: 36

Primary Risk Score Driver: (Policy Driven Projects Only)

◉ Reliability ○ Environment ○ Health & Safety ○ Not Policy Driven

3.6 Complexity Level

○ High Complexity ◉ Medium Complexity ○ Low Complexity ○ N/A

Complexity Score: 25

3.7 Next Planned Sanction Review

Date (Month/Year)	Purpose of Sanction Review
01/2015	Project Sanction

4 Financial

4.1 Business Plan

Business Plan Name & Period	Project included in approved Business Plan?	Over / Under Business Plan	Project Cost relative to approved Business Plan ($)
Capital Investment Plan, FY2015-FY2019	⊙ Yes ○ No	⊙ Over ○ Under ○ NA	$2.835M

4.1.1 If cost > approved Business Plan how will this be funded?

Re-allocation of funds within the portfolio will be managed by the Business Support Manager to meet jurisdictional budgetary, statutory and regulatory requirements.

4.2 CIAC / Reimbursement

N/A

4.3 Cost Summary Table

Project Number	Project Title	Project Estimate Level (%)	Spend	Prior Yrs	Current Planning Horizon ($M) Yr. 1 2014/15	Yr. 2 2015/16	Yr. 3 2016/17	Yr. 4 2017/18	Yr. 5 2018/19	Yr. 6 + 2019/20	Total
C046352	VVO Pilot Distribution	Est Lvl (e.g. +/- 10%)	CapEx	0.019	1.790	0.830	-	-	-	-	2.639
			OpEx	-	0.060	0.060	-	-	-	-	0.120
			Removal	-	0.142	0.110	-	-	-	-	0.252
			Total	0.019	1.992	1.000	-	-	-	-	3.011
C052708	VVO Pilot Substation	Est Lvl (e.g. +/- 10%)	CapEx	0.004	0.172	-	-	-	-	-	0.176
			OpEx	-	-	-	-	-	-	-	-
			Removal	-	-	-	-	-	-	-	-
			Total	0.004	0.172	-	-	-	-	-	0.176
C053111	VVO Pilot IS	Est Lvl (e.g. +/- 10%)	CapEx	0.034	1.285	-	-	-	-	-	1.319
			OpEx	-	0.289	-	-	-	-	-	0.289
			Removal	-	-	-	-	-	-	-	-
			Total	0.034	1.574	-	-	-	-	-	1.608
Total Project Sanction			CapEx	0.057	3.247	0.830	-	-	-	-	4.134
			OpEx	-	0.349	0.060	-	-	-	-	0.409
			Removal	-	0.142	0.110	-	-	-	-	0.252
			Total	0.057	3.738	1.000	-	-	-	-	4.795

*Note there is a recurring annual IS OpEx cost of $0.289M starting in FY15 for maintaining Security, Network WAN components, [redacted] units, servers, hardware, and software licensing.

4.4 Project Budget Summary Table

Project Costs per Business Plan

		Current Planning Horizon ($M)						
$M	Prior Yrs (Actual)	Yr. 1 2014/15	Yr. 2 2015/16	Yr. 3 2016/17	Yr. 4 2017/18	Yr. 5 2018/19	Yr. 6 + 2019/20	Total
CapEx	0.000	1.200	0.420	0.000	0.000	0.000	0.000	1.620
OpEx	0.000	0.084	0.029	0.000	0.000	0.000	0.000	0.113
Removal	0.000	0.168	0.059	0.000	0.000	0.000	0.000	0.227
Total Cost in Bus. Plan	0.000	1.452	0.508	0.000	0.000	0.000	0.000	1.960

Variance (Business Plan-Project Estimate)

		Current Planning Horizon ($M)						
$M	Prior Yrs (Actual)	Yr. 1 2014/15	Yr. 2 2015/16	Yr. 3 2016/17	Yr. 4 2017/18	Yr. 5 2018/19	Yr. 6 + 2019/20	Total
CapEx	(0.057)	(2.047)	(0.410)	0.000	0.000	0.000	0.000	(2.514)
OpEx	0.000	(0.265)	(0.031)	0.000	0.000	0.000	0.000	(0.296)
Removal	0.000	0.026	(0.051)	0.000	0.000	0.000	0.000	(0.025)
Total Cost in Bus. Plan	(0.057)	(2.286)	(0.492)	0.000	0.000	0.000	0.000	(2.835)

5 Key Milestones

Milestone	Target Date: (Month/Year)
Partial Sanction	01/2014
Construction Start	07/2014
Final Engineering Complete	10/2014
Partial Sanction	11/2014
IS Construction and implementation Complete - CC	12/ 2014
Project Sanction	01/2015
Construction Complete	08/2015
Project Closure	01/2016

6 Statements of Support

6.1.1 Supporters

The supporters listed have aligned their part of the business to support the project.

Role	Individual	Responsibilities
Investment Planner	DiConza, Glen	Endorses relative to 5-year business plan or emergent work
Resource Planning	Mokey, Mike	Endorses Resources, cost estimate, schedule, and Portfolio Alignment
Asset Management / Planning	Labarre, Alan T.	Endorses scope, estimate, and schedule with the company's

		goals, strategies, and objectives
Project Management	Moore, Timothy	Endorses Resources, cost estimate, schedule
Business Relationship Manager	Aneja, Aman	For respective portfolio only: 1. Review & Endorse IS Investment Proposals 2. Ensure IS Stakeholders approvals are obtained

6.1.2 Reviewers

The reviewers have provided feedback on the content/language of the paper.

Reviewer List	**Individual**
Finance (Dist)	Fowler, Keith
Finance (IS)	Benson, Chip
Regulatory	Zschokke, Peter
Jurisdictional Delegates	Patterson, Jim
Control Center	Gallagher, Michael
Procurement	Curran, Art

REDACTED

7 Decisions

I:

(a) APPROVE the investment of $3.000M and a tolerance of +/- 10% for purposes of final engineering, procurement of materials, IS implementation and construction activities

(b) NOTE the potential investment of $4.795M and a tolerance of +/-25%, contingent upon submittal and approval of a Project Sanction paper following completion of IS implementation and design.

(c) NOTE that John Skrzypczak (C046352, C052708) and Keir McIntyre (C053111/INVP 3752) are the Project Managers and have the approved financial delegation to undertake the activities stated in (a).

Signature..... Sup Gas Ops On Behalf Of .....Date..11/4/4.....

Executive Sponsor – Cheryl A. Warren, Senior Vice President, Network Strategy

8 Other Appendices

8.1 Sanction Request Breakdown by Project

$M	C046352	C052708	C053111	Total
CapEx	1.900	0.170	0.830	2.900
OpEx	0.050	0.000	0.000	0.050
Removal	0.050	0.000	0.000	0.050
Total	2.000	0.170	0.830	3.000

8.2 Figures

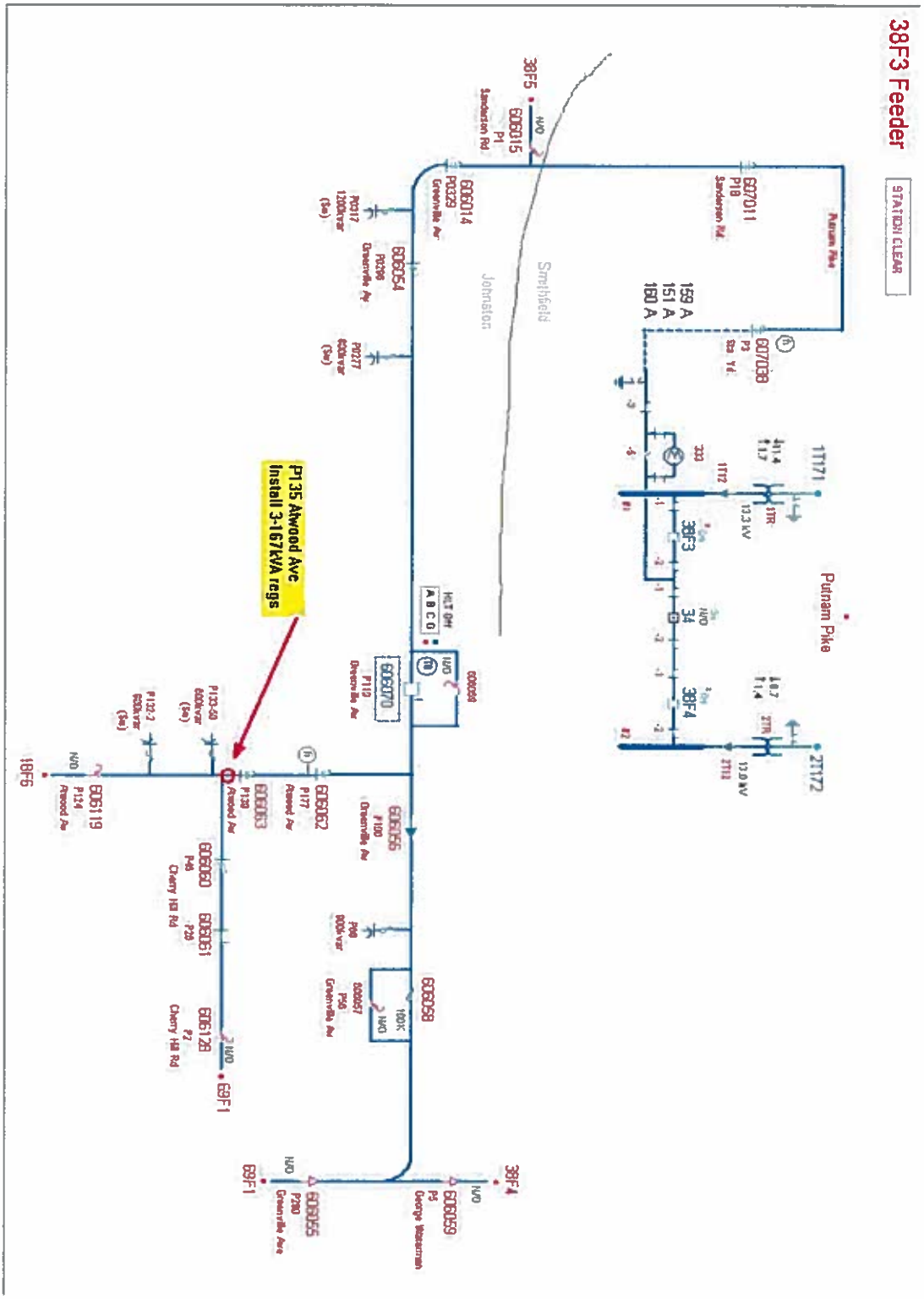
38F3 Feeder
STATION CLEAR
Putnam Pike
Johnston
Smithfield
P135 Atwood Ave
Install 3-167kVA regs
38F5
38F4
38F3
1T171
2T172
18F6
69F1

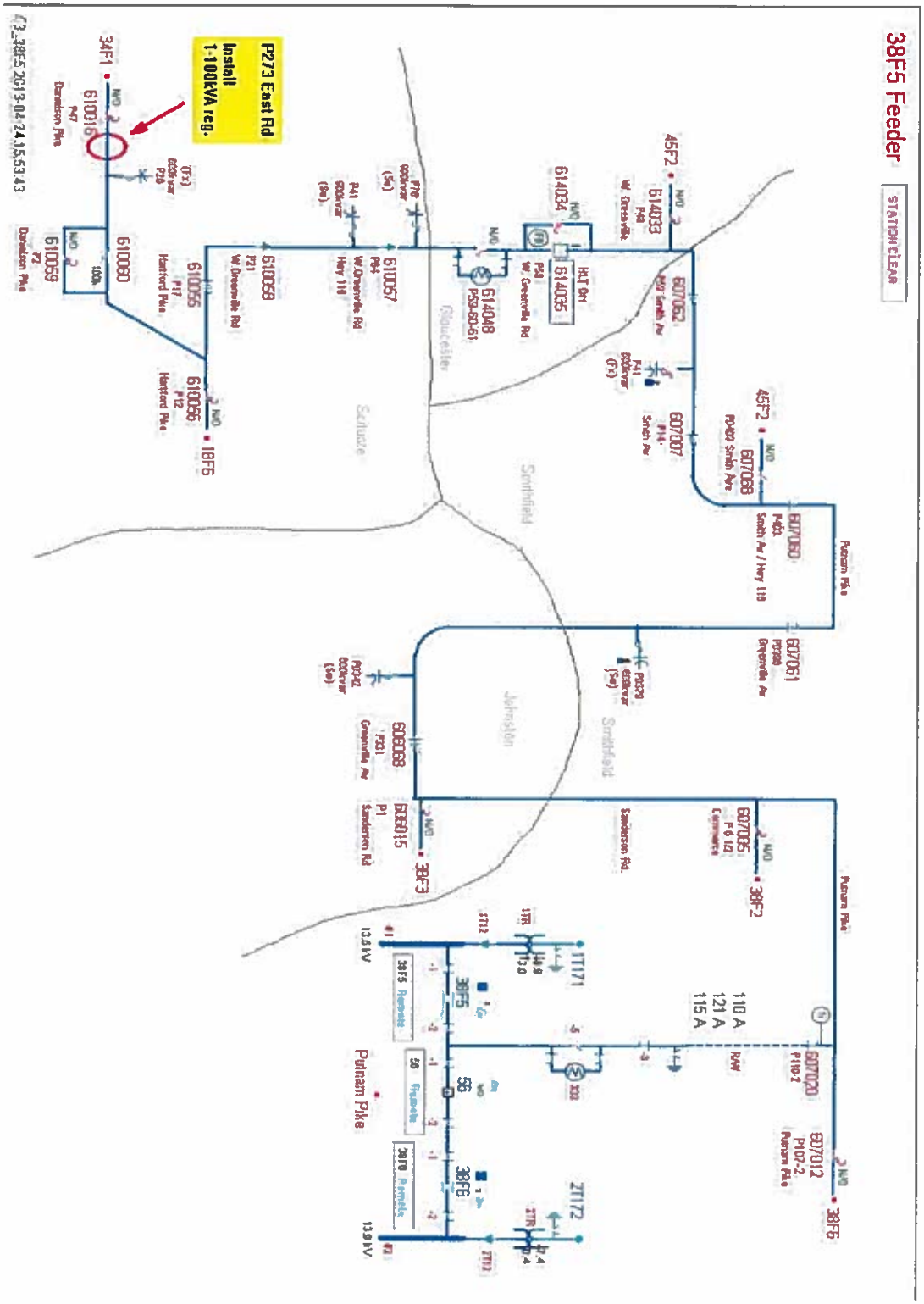
38F5 Feeder
STATION CLEAR
P273 East Rd
Install
1-100kVA reg.
34F1
610016
610060
610059
610055
610056
18F6
610058
610057
614034
614035
614033
45F2
607062
607007
607068
607060
607061
606068
606015
38F3
607005
38F2
607020
607012
38F6
1T171
2T172
38F5
56
38F6
110 A
121 A
115 A
Putnam Pike
Smithfield
Johnston
Glocester
Scituate
13.6 kV
13.9 kV

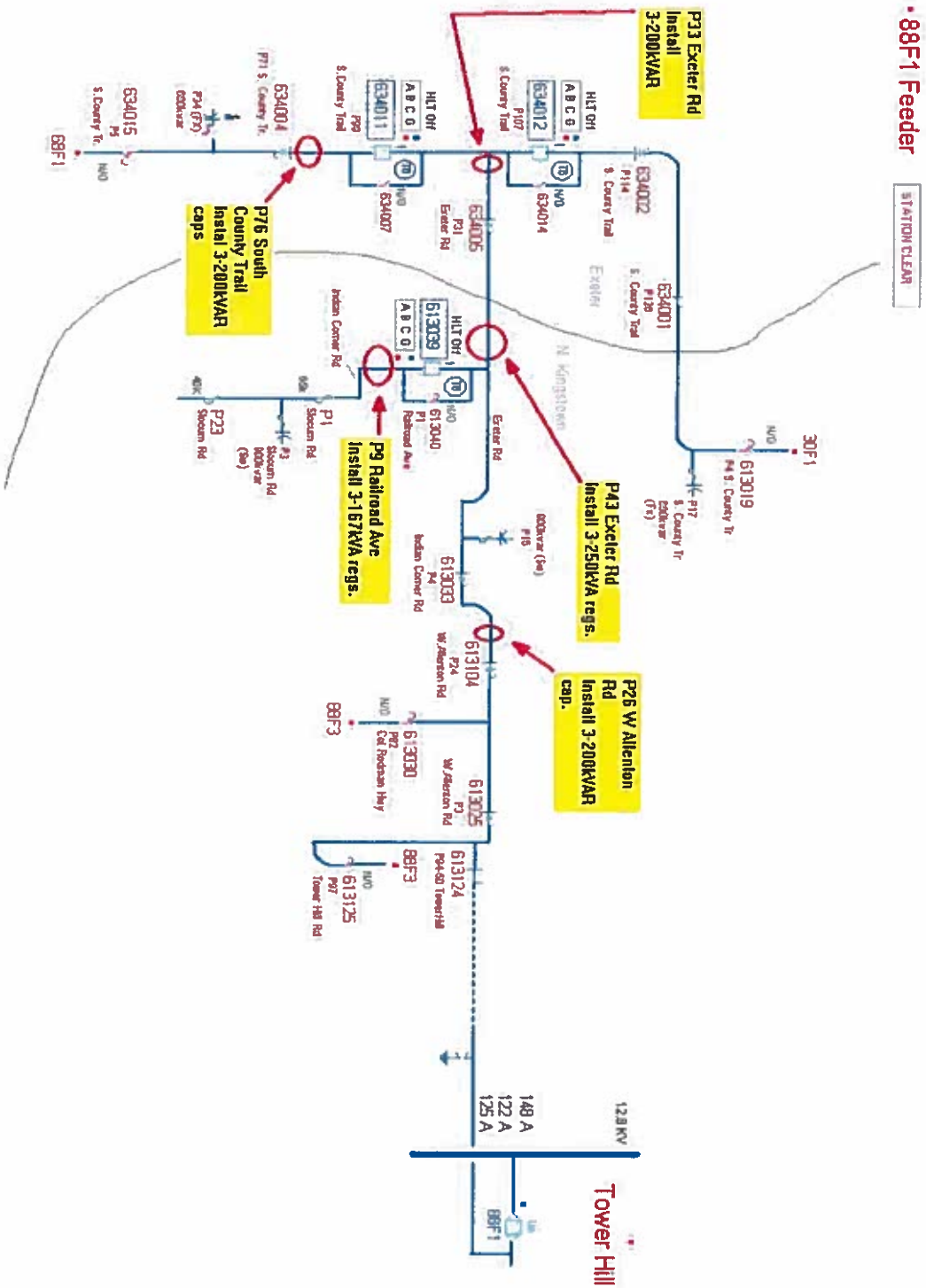
88F1 Feeder
STATION CLEAR
P33 Exeter Rd Install 3-200kVAR
P76 South County Trail Instal 3-200kVAR caps
P9 Railroad Ave Install 3-167kVA regs.
P43 Exeter Rd Install 3-250kVA regs.
P26 W Allenton Rd Install 3-200kVAR cap.
Tower Hill
12.8 KV
148 A
122 A
125 A
30F1
88F1
88F3

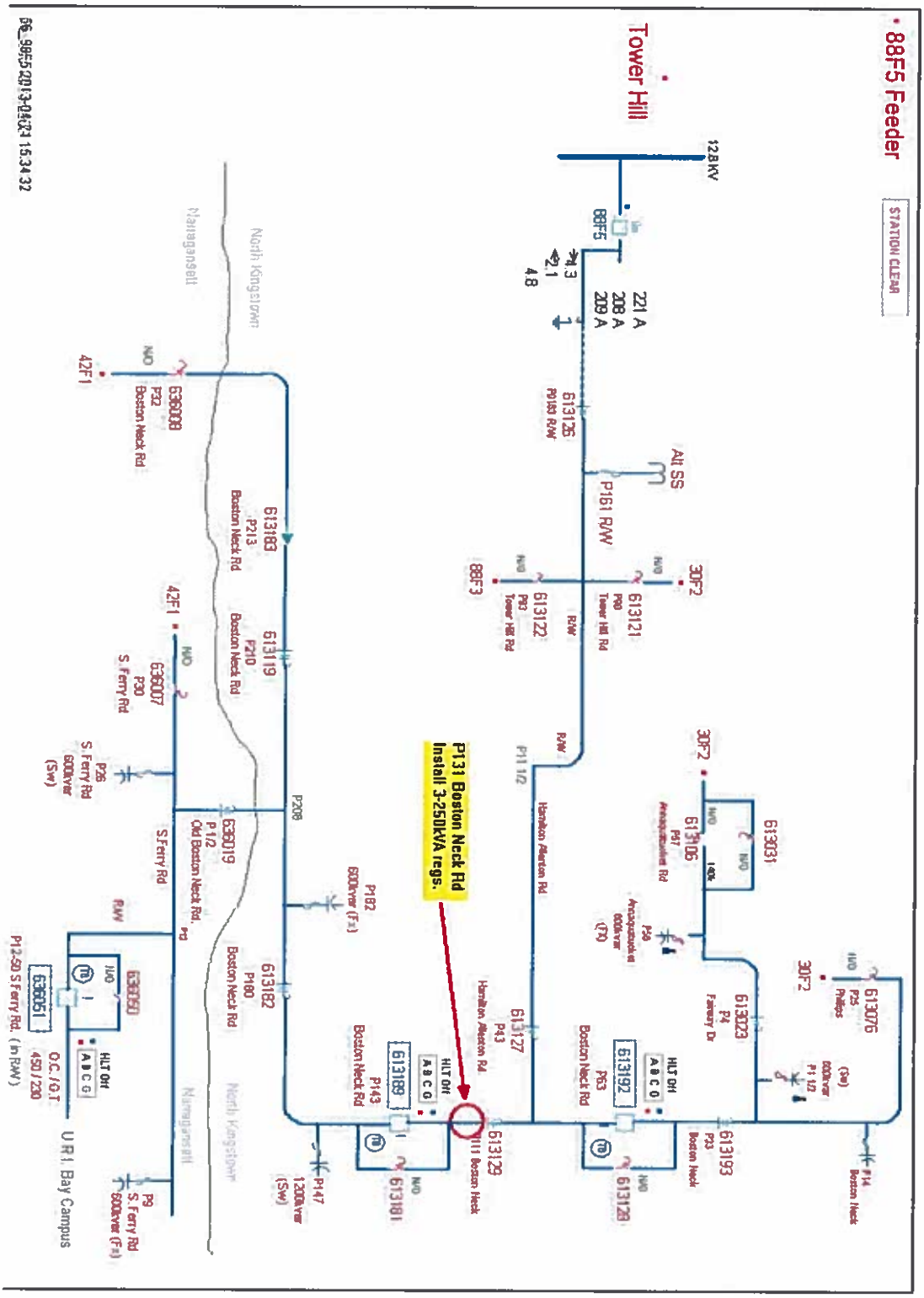
88F5 Feeder
STATION CLEAR
Tower Hill
12.8KV
88F5
221 A
208 A
209 A
613126
P161 R/W
Alt SS
P161 R/W
30F2
88F3
613121
613122
Tower Hill Rd
P131 Boston Neck Rd
Install 3-250kVA regs.
P11 1/2
Hamilton Allerton Rd
613031
613106
613076
613023
613192
613193
613129
613127
613189
613181
613129
P143
Boston Neck Rd
P147
1200kvar
(Sw)
P182
600kvar (Fx)
P208
613182
P180
Boston Neck Rd
613183
P213
Boston Neck Rd
613119
P210
Boston Neck Rd
636008
P32
Boston Neck Rd
42F1
636007
P30
S.Ferry Rd
P26
S.Ferry Rd
600kvar
(Sw)
636019
P1/2
Old Boston Neck Rd
S.Ferry Rd
636050
636051
O.C./G.T.
450/230
P12-50 S.Ferry Rd. (in R/W)
P9
S.Ferry Rd
600kvar (Fx)
U.R.I. Bay Campus
North Kingstown
Narragansett



D/IT

Short Form Sanction Paper

nationalgrid

Title:	Volt Var Optimization Demonstration Project	**Sanction Paper #:**	USSC-14-009
Project #:	C046352, C052708, C053111 / INVP 3752	**Sanction Type:**	Partial Sanction
Operating Company:	The Narragansett Electric Co.	**Date of Request:**	January 14, 2014
Author:	Anthony J Lasa	**Sponsor:**	Cheryl A. Warren, VP, Asset Management
Utility Service:	Electricity T&D	**Project Manager:**	John Skrzypczak & Chandrashekar Dikshith

1 *Executive Summary*

Sanctioning Summary

This paper requests partial sanction of projects C046352, C052708, and C053111 in the amount $1.300M with a tolerance of +/- 10% for the purposes of Preliminary Engineering, Final Engineering, Procurement of Materials, IS Implementation, and Limited Construction Activities.

The sanction amount is $1.300M broken down into:

$1.300M	CapEx
$0.000M	OpEx
$0.000M	Removal

NOTE the potential investment of $4.232M with a tolerance of +/- 25%, contingent upon submittal and approval of a Project Sanction paper following completion of preliminary engineering and final engineering.

2 *Project Detail*

Through these projects, National Grid will pursue a Volt VAR Optimization (VVO) Demonstration Project in the state of Rhode Island. National Grid has selected Utilidata to supply centralized control functionality designed to optimize the operation of existing and new reactive resources as well as various voltage regulation devices on seven distribution feeders selected for the demonstration project.

Infrastructure Development

Table 1 shows Putnam Pike distribution infrastructure development, which includes the installation of voltage regulators, capacitor banks, and step-down transformer removals/installations and associated area voltage conversion. The area voltage

conversion calls for one 4kV voltage regulator to be removed and approximately 4200 circuit feet to be converted to 12.47kV.

The Putnam Pike substation regulator controllers will be replaced with Beckwith M-2001D units, which meet current standards and enables device supervisory control.

Putnam Pike	Line Regulators	Step-down Transformers	Capacitor Banks	Cap Controls (SEL 734B)	Convert (mi)	Load Balancing
Install	9		4			
Remove	1					
Replace	3	3		11	0.80	20

TABLE 1: PUTNAM PIKE ASSETS

Table 2 shows the recommended Tower Hill distribution infrastructure development which includes the installation of voltage line regulators and capacitor banks. There is no recommended work at the substation.

Tower Hill	Line Regulators	Step-down Transformers	Capacitor Banks	Cap Controls (SEL 734B)	Convert (mi)	Load Balancing
Install	9		3			
Remove						
Replace				16		23

TABLE 2: TOWER HILL ASSETS

Table 3 summarizes the total infrastructure development on the circuits out of Putnam Pike and Tower Hill substations. Figures 1-5 shows electrical one-lines of specific asset locations for the various feeders involved in the demonstration project.

Total	Line Regulators	Step-down Transformers	Capacitor Banks	Cap Controls (SEL 734B)	Convert (mi)	Load Balancing
Install	18		7			
Remove	1					
Replace	3	3		27	0.80	43

TABLE 3: TOTAL ASSETS

IS Scope

- Survey and design for establishing radio network between 40 field devices in Putnam pike (Line Voltage regulators, Line Voltage monitors and Capacitor bank controllers) with [redacted] base station.
- Establish Multi-Protocol Label Switch (MPLS) network connectivity between [redacted] base station and Northborough data center / [redacted] server location.
- Establish authentication mechanism for the radios using existing Smart grid Authentication servers.

- Establish network for Wimax authentication with Itron through GridNet 17 and Gridnet 18 transit cloud
- Establish network with GE Pulsenet system, if during the design stage it is determined it will be needed.
- Install Switch, Firewall, Router and Remote Terminal Unit to setup an Electronic Security Perimeter (ESP) at Tower Hill and Putnam Pike substations.
- Establish MPLS network connectivity from Tower Hill and Putnam Pike substations to Northborough data center / [redacted] server location.
- Establish cellular network connectivity between Tower Hill Forty forty field devices and [redacted] system (Using GridNet 17, Gridnet 18 and Gridnet 19 cloud established for Smart Grid project).
- Installation of [redacted] software and testing connectivity between systems (hardware installation and commissioning being managed by Engineering team and configuration [redacted]), setting up ESP network for [redacted] server components in data center.
- Establish network connectivity between the National Grid EMS Network and [redacted] system.
- Implement Secure Shell File Transfer Protocol to facilitate the (daily or weekly) transfer data [redacted] for Measurement & Verification analysis.
- Provide access to Engineering and [redacted] users for support and maintenance of field devices, [redacted] System, radio, cellular and network devices through the corporate [redacted] infrastructure.
- Track potential benefits from deployment and infrastructure development costs to enable future system planning.

The benefits of distribution feeder reactive support and voltage regulation are well known and individual capacitor installations and voltage regulators can be justified to maintain service voltage within required limits and to release capacity on T&D assets. It is believed that a more refined control system will allow the Company to meet its service quality requirements while reducing system losses and reducing customer energy consumption. However, National Grid has not yet evaluated the potential for achieving these additional benefits to be derived from advanced VVO control systems and strategies utilizing centralized control algorithms.

This project is recommended at this time for the following reasons:

- To quantify the potential operational benefits from these systems as stated by the manufacturer in order to improve service to National Grid customers
- To understand potential synergies with other rapidly developing uses of advanced technology on power distribution systems
- To understand how application of these systems could be integrated with existing guidelines to meet current objectives for volt/VAR infrastructure

- To guide system planners on potential benefits from this type of deployment
- To understand system performance when distribution is out of normal configuration

Direct benefits the demonstration project seeks to quantify are as follows:

- Reduction in system losses
- Reduction in customer energy use
- Improvement in voltage performance
- Reduction in feeder demand
- Improved flexibility to meet NE ISO pf performance
- Improved planning & operations capability as a result of increased system performance monitoring

The criteria used for selecting the distribution feeders that are proposed in the demonstration project are as follows:

- 15kV feeder class
- Some level of existing automation Energy Management System (EMS) at substation
- Existing Line capacitors
- At least one set of line regulators on a feeder served by a target substation

Table 4 shows the characteristics of an average Rhode Island feeder with comparison to the feeders that were selected. The selected feeders tended to be longer than the average feeder due to the desire to evaluate a feeder that had distribution line regulators installed.

VVO Feeder Selection Analysis	# of Feeders		Customers	Total Miles	OH Miles	UG Miles	3Ph OH Miles	Cap Banks	kVAR	3PH Line Regs
RI 15 kV Averages	222		1,789	23.8	20.1	3.8	7.9	3.6	2,804.8	0.09
RI Target Sample Averages	51		2,031	38.0	32.1	5.9	11.3	4.3	3,066.7	0.37
Test Sample Averages	7		2,286	47.5	40.4	6.6	13.8	4.9	3,800.0	0.4
Test Sample Totals	7		16,000	332.1	282.5	46.3	96.9	34.0	26,600.0	3.00

TABLE 4: VVO SELECTION ANALYSIS

The selected feeders for this demonstration project are Putnam Pike 38F1, 38F3, 38F5 in the northern area. In the southern area Tower Hill 88F1, 88F3, 88F5, and the 88F7

REDACTED

were selected. Although the 88F7 feeder is not yet in service, Its circuit characteristics were assembled from the portions of existing circuits (including the Lafayette substation feeder 30F2) that will be used to establish its normal configuration.

Required infrastructure development was determined to address existing concerns related to thermal, voltage, and reactive performance before advanced VVO could be executed.

2.1.1 Alternatives:

Alternative 1: Do Nothing

This solution was rejected after a comprehensive project study report was completed to evaluate the benefits of current National Grid volt VAR management methods versus this proposed advanced volt VAR management solution with two-way communications and a centralized algorithm controlling voltage regulators and capacitor banks. The results of this report were presented to internal stakeholders as well as the Rhode Island Public Utilities Commission staff. Note, the internal study recommended pursuing this project's advanced volt var management solution in lieu of remaining with the currently used method.

2.1.2 Investment Recovery and Regulatory Implications

Investment Recovery will be through standard rate recovery mechanisms.

2.1.3 Customer Impact

This project results in an indicative first full year revenue requirement when the asset is placed in service equal to approximately $0.705M. This is indicative only. The actual revenue requirement will differ, depending upon the timing of the next rate case and/or the timing of the next filing in which the project is included in rate base.

3 Related Projects, Scoring, Budgets

Summary of Projects:

Project Number	Project Type (Elec only)	Project Title	Estimate Amount ($M)
C046352	D-Line	VVO Pilot - Distribution	$ 2.500
C052708	D-Sub	VVO Piliot - Substation	$ 0.124
C053111 / INVP 3752	N/A	VVO Pilot - IS	$ 1.608
		Total	$ 4.232

Short Form Sanction Paper

nationalgrid

Associated Projects:

Project Number	Project Title	Estimate Amount
	Total	$ -

Prior Sanctioning History (including relevant approved Strategies):

Date	Governance Body	Sanctioned Amount	Paper Title	Sanction Type
12/03/2013	Power Plant	$0.500M	Volt Var Optimization Demonstration Project	Rob Sheridan, DOA

Category:

Category	Reference to Mandate, Policy, or NPV Assumptions
O Mandatory ⊙ Policy- Driven O Justified NPV	

Asset Management Risk Score

Asset Management Risk Score: 36

Primary Risk Score Driver: (Policy Driven Projects Only)

⊙ Reliability O Environment O Health & Safety O Not Policy Driven

Complexity Level:

O High Complexity ⊙ Medium Complexity O Low Complexity O N/A

Complexity Score: 25

4 Financial

Business Plan:

Business Plan Name & Period	Project included in approved Business Plan?	Over / Under Business Plan	Project Cost relative to approved Business Plan ($)
Capital Investment Plan, FY2015-FY2019	⊙ Yes ○ No	⊙ Over ○ Under ○ NA	$1.592M

4.1.1 If cost > approved Business Plan how will this be funded?

CIAC / Reimbursement

$M	Prior Yrs	Yr. 1 2013/14	Yr. 2 2014/15	Yr. 3 2015/16	Yr. 4 2016/17	Yr. 5 2017/18	Yr. 6 + 2018/19	Total
CIAC/Reimbursement	$ -	$ -	$ -	$ -	$ -	$ -	$ -	$ -

Cost Summary Table

Project Number	Project Title	Project Estimate	Spend ($M	Prior Yrs	Current Planning Horizon Yr. 1 2013/14	Yr. 2 2014/15	Yr. 3 2015/16	Yr. 4 2016/17	Yr. 5 2017/18	Yr. 6 + 2018/19	Total
C046352	VVO Pilot - Distribution	+/- 10%	CapEx	-	0.100	1.580	0.420	-	-	-	2.100
			OpEx	-	-	0.080	0.020	-	-	-	0.100
			Removal	-	-	0.240	0.060	-	-	-	0.300
			Total	-	0.100	1.900	0.500	-	-	-	2.500
C052708	VVO Piliot - Substation	+/- 10%	CapEx	-	0.005	0.099	-	-	-	-	0.104
			OpEx	-	-	0.005	-	-	-	-	0.005
			Removal	-	-	0.015	-	-	-	-	0.015
			Total	-	0.005	0.119	-	-	-	-	0.124
C053111 / INVP 3752	VVO Pilot - IS	+/- 10%	CapEx	-	0.528	0.791	-	-	-	-	1.319
			OpEx	-	-	0.289	-	-	-	-	0.289
			Removal	-	-	-	-	-	-	-	-
			Total	-	0.528	1.080	-	-	-	-	1.608
Total Project Sanction			CapEx	-	0.633	2.470	0.420	-	-	-	3.523
			OpEx	-	-	0.374	0.020	-	-	-	0.394
			Removal	-	-	0.255	0.060	-	-	-	0.315
			Total	-	0.633	3.099	0.500	-	-	-	4.232

*Note there is a recurring annual IS OpEx cost of $0.289M starting in FY15 for maintaining Network WAN components, Wimax units, servers, hardware, and software licensing.

Project Budget Summary Table

Project Costs per Business Plan

		Current Planning Horizon						
	Prior Yrs	Yr. 1	Yr. 2	Yr. 3	Yr. 4	Yr. 5	Yr. 6 +	
$M	(Actual)	2013/14	2014/15	2015/16	2016/17	2017/18	2018/19	Total
CapEx	$ -	$ 0.500	$ 1.200	$ 0.420	$ -	$ -	$ -	$ 2.120
OpEx	$ -	$ 0.130	$ 0.080	$ 0.030	$ -	$ -	$ -	$ 0.240
Removal	$ -	$ 0.050	$ 0.170	$ 0.060	$ -	$ -	$ -	$ 0.280
Total Cost in Bus. Plan	$ -	$ 0.680	$ 1.450	$ 0.510	$ -	$ -	$ -	$ 2.640

Variance (Business Plan-Project Estimate)

		Current Planning Horizon						
	Prior Yrs	Yr. 1	Yr. 2	Yr. 3	Yr. 4	Yr. 5	Yr. 6 +	
	(Actual)	2013/14	2014/15	2015/16	2016/17	2017/18	2018/19	Total
CapEx	$ -	$ (0.133)	$ (1.270)	$ -	$ -	$ -	$ -	$ (1.403)
OpEx	$ -	$ 0.130	$ (0.294)	$ 0.010	$ -	$ -	$ -	$ (0.154)
Removal	$ -	$ 0.050	$ (0.085)	$ -	$ -	$ -	$ -	$ (0.035)
Total Cost in Bus. Plan	$ -	$ 0.047	$ (1.649)	$ 0.010	$ -	$ -	$ -	$ (1.592)

5 ***Key Milestones:***

Milestone	Target Date: (Month/Year)
Partial Sanction	01/2014
Final Engineering Complete	06/2014
Project Sanction	07/2014
IS Construction and implementation Complete - CC	07/ 2014
Construction Start	07/2014
Construction Complete	04/2015
Project Closure	09/2015

REDACTED

6 Statements of Support

6.1.1 Supporters

Role	Name	Responsibilities
Investment Planner	Glen DiConza	Endorses relative to 5-year business plan or emergent work
Resource Planning	Jim Patterson	Endorses Resources, cost estimate, schedule, and Portfolio Alignment
Engineering and Design	Alan LaBarre	Endorses scope, design, conformance with design standards
Project Management	Timothy Moore	Endorses Resources, cost estimate, schedule
Business Relationship Manager	Wayne Watkins	Endorses relative to overall scope and design

6.1.2 Reviewers

Reviewer List	Name
Finance (Dist)	Keith Fowler
Finance (IS)	Chip Benson
Regulatory	Benjamin Ryan
Jurisdictional Delegates	Jennifer Grimsley
Control Center	Michael Gallagher
Procurement	Art Curran

7. ***Decisions:***

The US Sanctioning Committee (USSC) at a meeting held on January 14, 2014:

(a) APPROVE the investment of $1.300M and a tolerance of +/-10 % for purposes of Preliminary Engineering, Final Engineering, Procurement of Materials, IS Implementation, and Limited Construction Activities.

(b) NOTE the potential investment of $4.232M and a tolerance of +/-25%, contingent upon submittal and approval of a Project Sanction paper following completion of Final Engineering and Design.

(c) NOTE that John Skrzypczak (C046352, C052708) and Chandrashekar Dikshith (C053111/INVP 3752) are the Project Managers and has the approved financial delegation to undertake the activities stated in (a).

Signature.....Date 1/22/14

Marie Jordan
Sr VP Network Strategy
Executive Sponsor

REDACTED

8. Other Appendices:

8.1 Sanction Request Breakdown by Project (Partial Sanction only)

$M	C046352	C052708	C053111 / INVP 3752	Total
CapEx	$0.760	$0.020	$0.520	$1.300
OpEx	$0.000	$0.000	$0.000	$0.000
Removal	$0.000	$0.000	$0.000	$0.000
Total	$0.760	$0.020	$0.520	$1.300

8.2 Figures

Below are Figures 1 through 6:

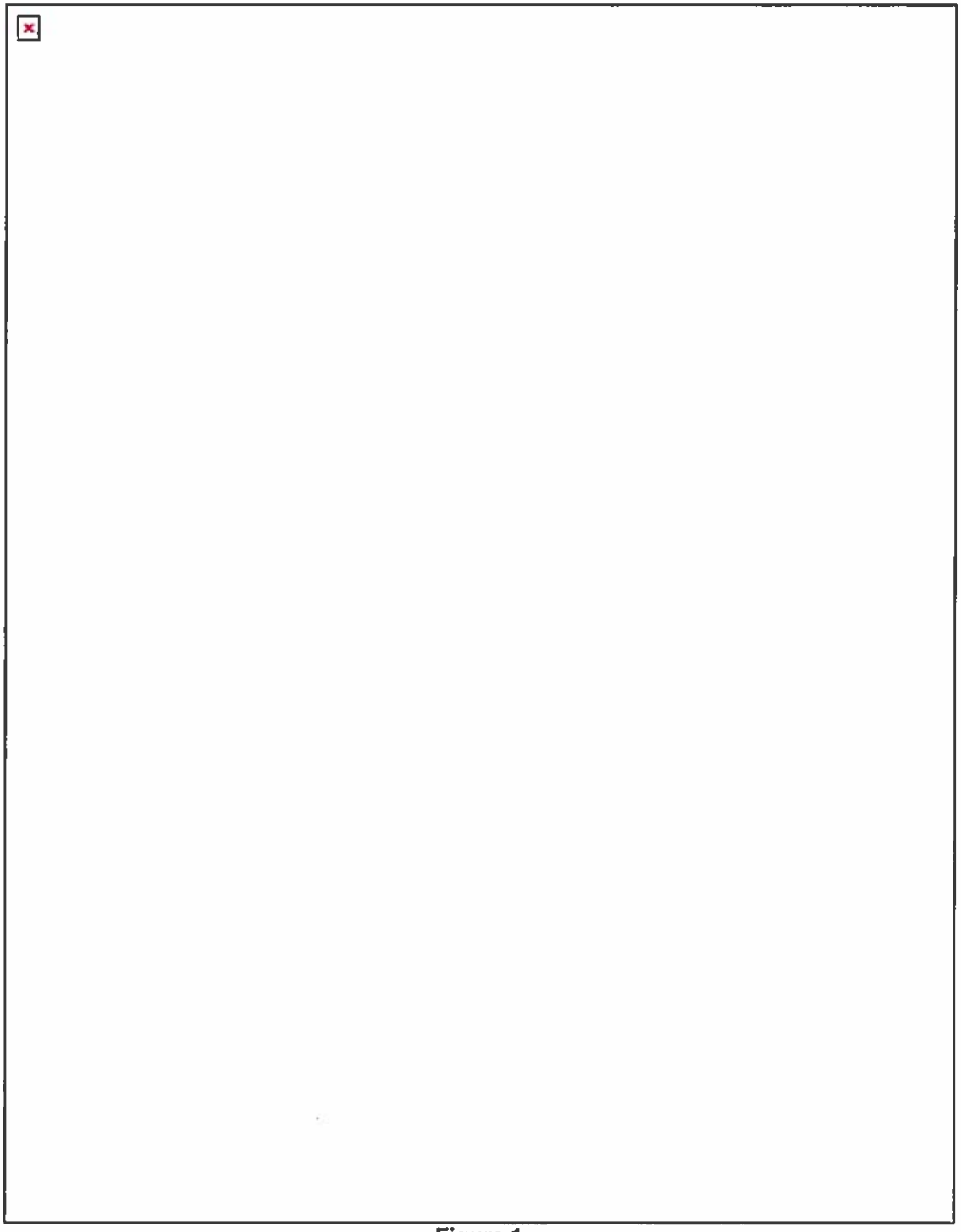

Figure 1

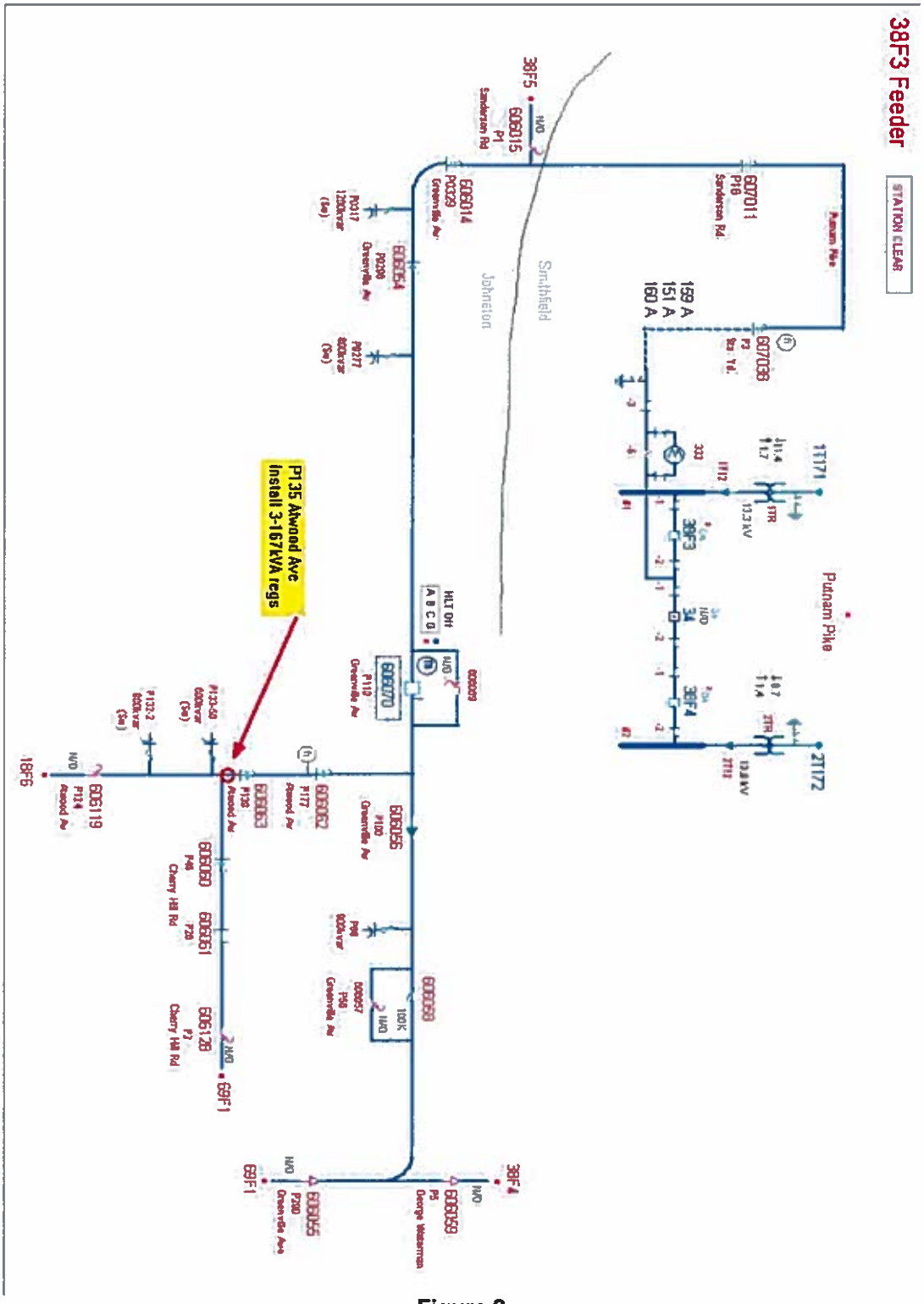
38F3 Feeder
STATION CLEAR
Putnam Pike
Smithfield
Johnston
P135 Atwood Ave
Install 3-167kVA regs
1T171
2T172
38F3
38F4
38F5
18F6
69F1
Sanderson Rd
Greenville Av
Cherry Hill Rd
George Waterman

Figure 2

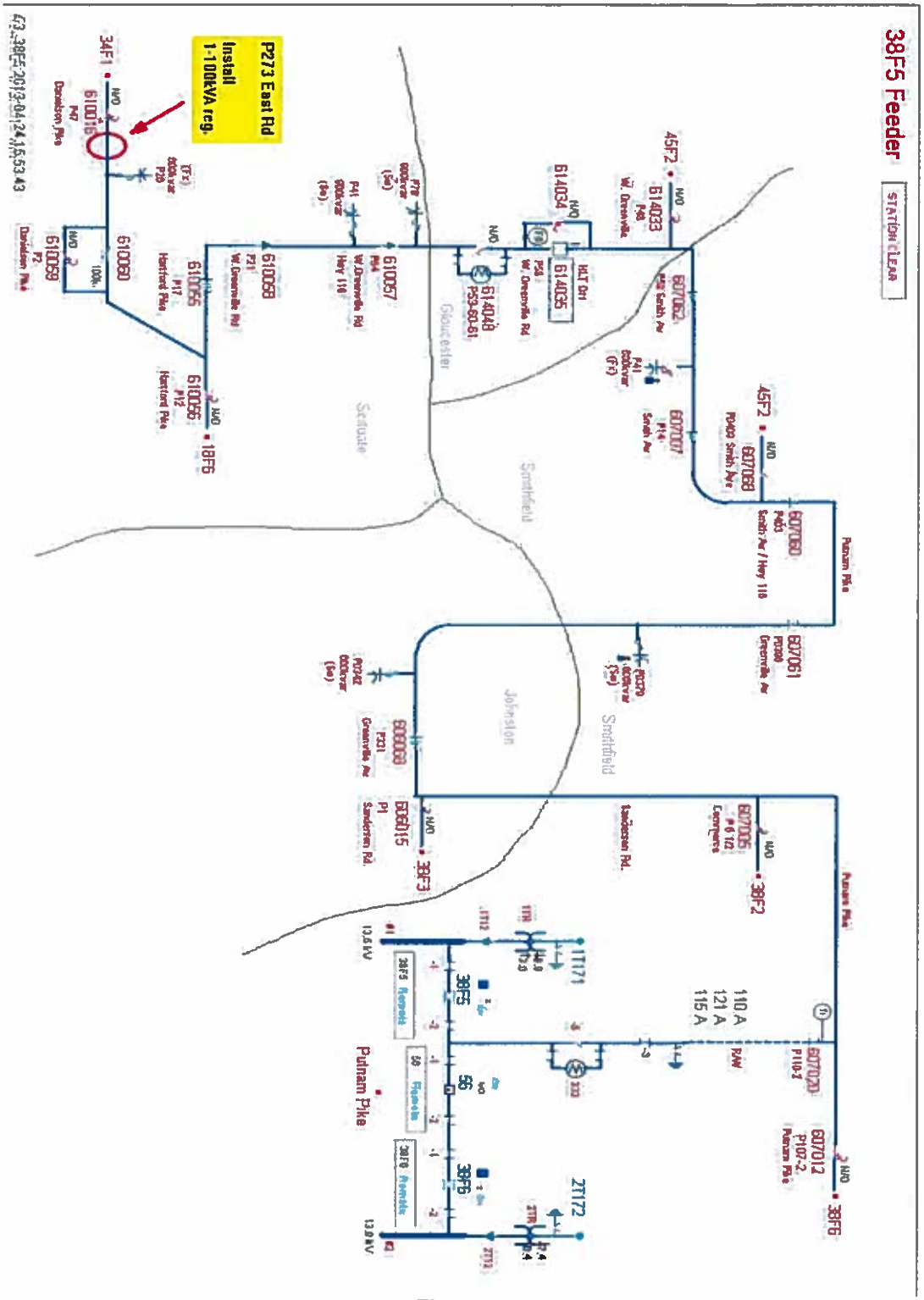
38F5 Feeder
STATION CLEAR
P273 East Rd
Install
1-100kVA reg.
Gloucester
Scituate
Smithfield
Johnston
Putnam Pike
110 A
121 A
115 A

Figure 3

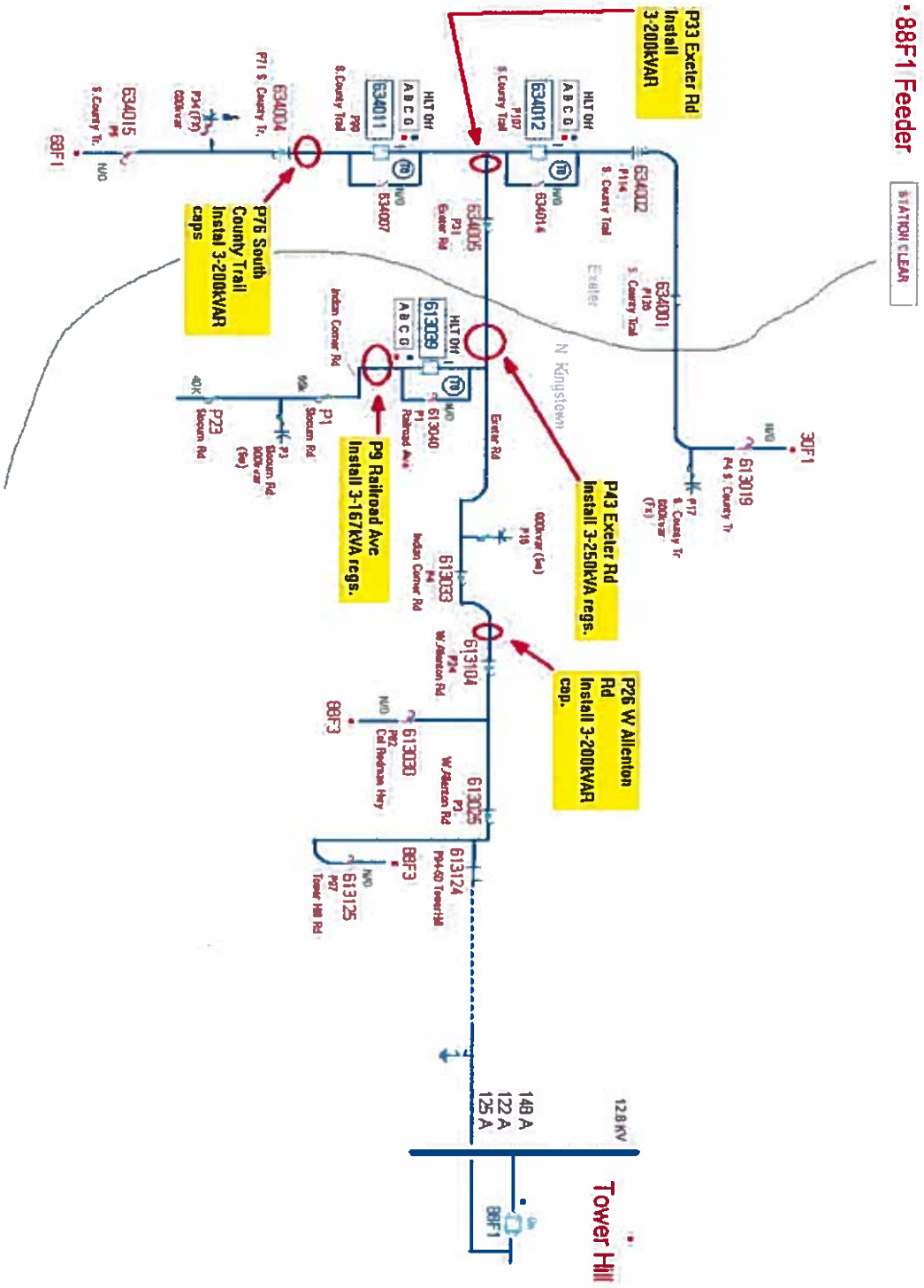
P33 Exeter Rd Install 3-200kVAR
P76 South County Trail Instal 3-200kVAR caps
P9 Railroad Ave Install 3-167kVA regs.
P43 Exeter Rd Install 3-250kVA regs.
P26 W Allenton Rd Install 3-200kVAR cap.
88F1 Feeder
STATION CLEAR
Tower Hill
88F1
88F3
30F1
634004
634011
634012
634002
634001
634005
634007
634014
613039
613040
613033
613104
613030
613125
613124
613019
634015
P23
P1
P2
P3
P4
P5
P6
P7
P8
P9
P10
P11
P12
P13
P14
P15
P16
P17
P18
P19
P20
P21
P22
P23
P24
P25
P26
P27
P28
P29
P30
P31
P32
P33
P34
P35
P36
P37
P38
P39
P40
P41
P42
P43
P44
P45
P46
P47
P48
P49
P50
P51
P52
P53
P54
P55
P56
P57
P58
P59
P60
P61
P62
P63
P64
P65
P66
P67
P68
P69
P70
P71
P72
P73
P74
P75
P76
P77
P78
P79
P80
P81
P82
P83
P84
P85
P86
P87
P88
P89
P90
P91
P92
P93
P94
P95
P96
P97
P98
P99
P100
P101
P102
P103
P104
P105
P106
P107
P108
P109
P110
P111
P112
P113
P114
P115
P116
P117
P118
P119
P120
P121
P122
P123
P124
P125
P126
P127
P128
P129
P130
P131
P132
P133
P134
P135
P136
P137
P138
P139
P140
P141
P142
P143
P144
P145
P146
P147
P148
P149
P150
P151
P152
P153
P154
P155
P156
P157
P158
P159
P160
P161
P162
P163
P164
P165
P166
P167
P168
P169
P170
P171
P172
P173
P174
P175
P176
P177
P178
P179
P180
P181
P182
P183
P184
P185
P186
P187
P188
P189
P190
P191
P192
P193
P194
P195
P196
P197
P198
P199
P200
P201
P202
P203
P204
P205
P206
P207
P208
P209
P210
P211
P212
P213
P214
P215
P216
P217
P218
P219
P220
P221
P222
P223
P224
P225
P226
P227
P228
P229
P230
P231
P232
P233
P234
P235
P236
P237
P238
P239
P240
P241
P242
P243
P244
P245
P246
P247
P248
P249
P250
P251
P252
P253
P254
P255
P256
P257
P258
P259
P260
P261
P262
P263
P264
P265
P266
P267
P268
P269
P270
P271
P272
P273
P274
P275
P276
P277
P278
P279
P280
P281
P282
P283
P284
P285
P286
P287
P288
P289
P290
P291
P292
P293
P294
P295
P296
P297
P298
P299
P300
P301
P302
P303
P304
P305
P306
P307
P308
P309
P310
P311
P312
P313
P314
P315
P316
P317
P318
P319
P320
P321
P322
P323
P324
P325
P326
P327
P328
P329
P330
P331
P332
P333
P334
P335
P336
P337
P338
P339
P340
P341
P342
P343
P344
P345
P346
P347
P348
P349
P350
P351
P352
P353
P354
P355
P356
P357
P358
P359
P360
P361
P362
P363
P364
P365
P366
P367
P368
P369
P370
P371
P372
P373
P374
P375
P376
P377
P378
P379
P380
P381
P382
P383
P384
P385
P386
P387
P388
P389
P390
P391
P392
P393
P394
P395
P396
P397
P398
P399
P400
P401
P402
P403
P404
P405
P406
P407
P408
P409
P410
P411
P412
P413
P414
P415
P416
P417
P418
P419
P420
P421
P422
P423
P424
P425
P426
P427
P428
P429
P430
P431
P432
P433
P434
P435
P436
P437
P438
P439
P440
P441
P442
P443
P444
P445
P446
P447
P448
P449
P450
P451
P452
P453
P454
P455
P456
P457
P458
P459
P460
P461
P462
P463
P464
P465
P466
P467
P468
P469
P470
P471
P472
P473
P474
P475
P476
P477
P478
P479
P480
P481
P482
P483
P484
P485
P486
P487
P488
P489
P490
P491
P492
P493
P494
P495
P496
P497
P498
P499
P500
P501
P502
P503
P504
P505
P506
P507
P508
P509
P510
P511
P512
P513
P514
P515
P516
P517
P518
P519
P520
P521
P522
P523
P524
P525
P526
P527
P528
P529
P530
P531
P532
P533
P534
P535
P536
P537
P538
P539
P540
P541
P542
P543
P544
P545
P546
P547
P548
P549
P550
P551
P552
P553
P554
P555
P556
P557
P558
P559
P560
P561
P562
P563
P564
P565
P566
P567
P568
P569
P570
P571
P572
P573
P574
P575
P576
P577
P578
P579
P580
P581
P582
P583
P584
P585
P586
P587
P588
P589
P590
P591
P592
P593
P594
P595
P596
P597
P598
P599
P600
P601
P602
P603
P604
P605
P606
P607
P608
P609
P610
P611
P612
P613
P614
P615
P616
P617
P618
P619
P620
P621
P622
P623
P624
P625
P626
P627
P628
P629
P630
P631
P632
P633
P634
P635
P636
P637
P638
P639
P640
P641
P642
P643
P644
P645
P646
P647
P648
P649
P650
P651
P652
P653
P654
P655
P656
P657
P658
P659
P660
P661
P662
P663
P664
P665
P666
P667
P668
P669
P670
P671
P672
P673
P674
P675
P676
P677
P678
P679
P680
P681
P682
P683
P684
P685
P686
P687
P688
P689
P690
P691
P692
P693
P694
P695
P696
P697
P698
P699
P700
P701
P702
P703
P704
P705
P706
P707
P708
P709
P710
P711
P712
P713
P714
P715
P716
P717
P718
P719
P720
P721
P722
P723
P724
P725
P726
P727
P728
P729
P730
P731
P732
P733
P734
P735
P736
P737
P738
P739
P740
P741
P742
P743
P744
P745
P746
P747
P748
P749
P750
P751
P752
P753
P754
P755
P756
P757
P758
P759
P760
P761
P762
P763
P764
P765
P766
P767
P768
P769
P770
P771
P772
P773
P774
P775
P776
P777
P778
P779
P780
P781
P782
P783
P784
P785
P786
P787
P788
P789
P790
P791
P792
P793
P794
P795
P796
P797
P798
P799
P800
P801
P802
P803
P804
P805
P806
P807
P808
P809
P810
P811
P812
P813
P814
P815
P816
P817
P818
P819
P820
P821
P822
P823
P824
P825
P826
P827
P828
P829
P830
P831
P832
P833
P834
P835
P836
P837
P838
P839
P840
P841
P842
P843
P844
P845
P846
P847
P848
P849
P850
P851
P852
P853
P854
P855
P856
P857
P858
P859
P860
P861
P862
P863
P864
P865
P866
P867
P868
P869
P870
P871
P872
P873
P874
P875
P876
P877
P878
P879
P880
P881
P882
P883
P884
P885
P886
P887
P888
P889
P890
P891
P892
P893
P894
P895
P896
P897
P898
P899
P900
P901
P902
P903
P904
P905
P906
P907
P908
P909
P910
P911
P912
P913
P914
P915
P916
P917
P918
P919
P920
P921
P922
P923
P924
P925
P926
P927
P928
P929
P930
P931
P932
P933
P934
P935
P936
P937
P938
P939
P940
P941
P942
P943
P944
P945
P946
P947
P948
P949
P950
P951
P952
P953
P954
P955
P956
P957
P958
P959
P960
P961
P962
P963
P964
P965
P966
P967
P968
P969
P970
P971
P972
P973
P974
P975
P976
P977
P978
P979
P980
P981
P982
P983
P984
P985
P986
P987
P988
P989
P990
P991
P992
P993
P994
P995
P996
P997
P998
P999
P1000
148 A
122 A
125 A
12.8 kV

Figure 4

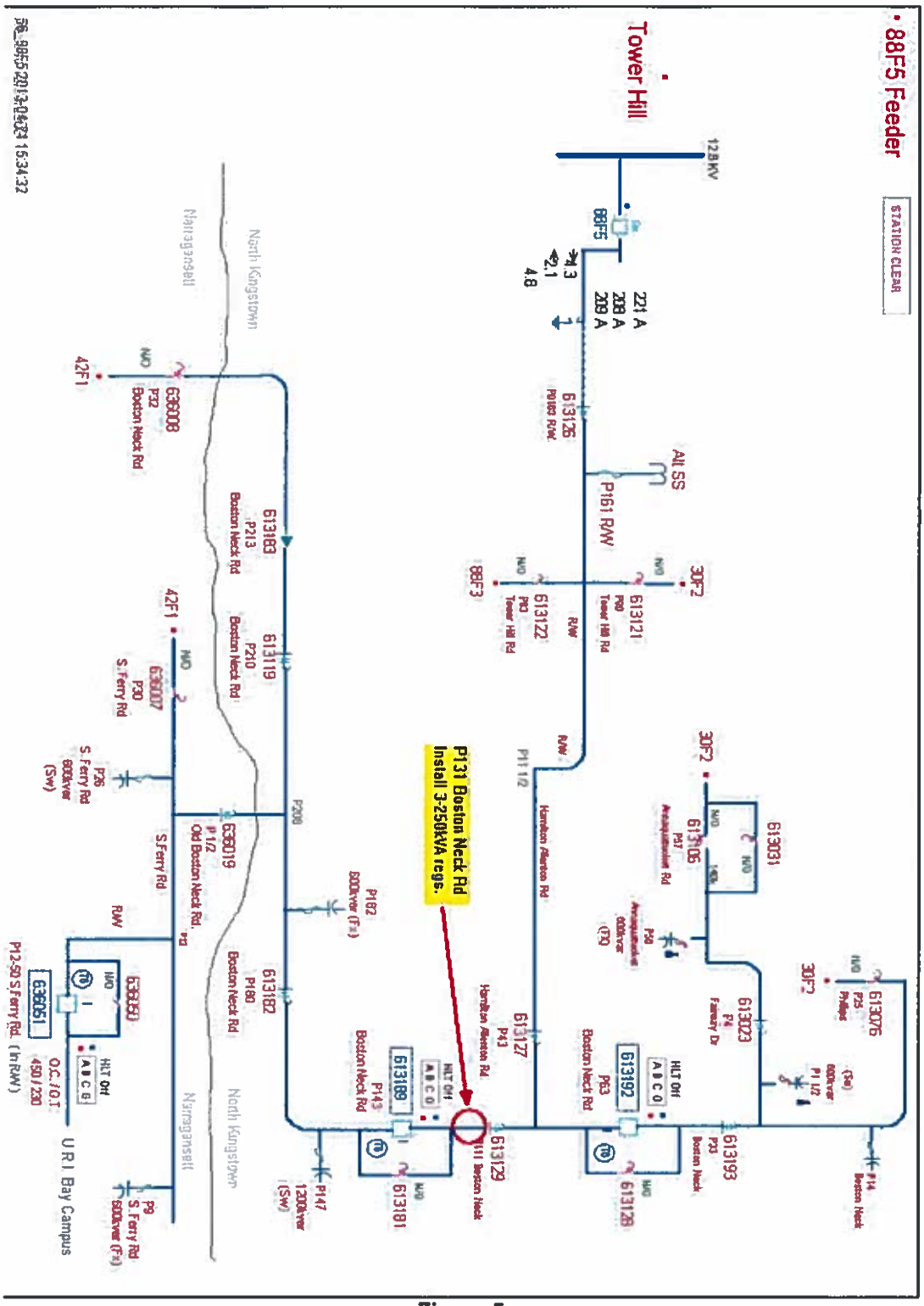
88F5 Feeder
Tower Hill
STATION CLEAR
12.8 KV
88F5
221 A
208 A
209 A
613126
P161 R/W
Alt SS
30F2
88F3
613121
613122
P131 Boston Neck Rd
Install 3-250kVA regs.
613129
613181
613189
613182
613127
613192
613128
613193
613023
613076
613031
613106
613183
613119
636008
636007
636019
636050
636051
42F1
North Kingstown
Narragansett
U R I Bay Campus

Figure 5



Figure 6

This document has been reviewed for Critical Energy/Electric Infrastructure Information (CEII). 7/9/2018

Title:	South Street Substation Rebuild	**Sanction Paper #:**	USSC-14-195 V3
Project #:	C051212, C051213, C055584, C055585, C055586, C055623	**Sanction Type:**	Sanction
Operating Company:	Narragansett Electric Co. and Electricity T&D	**Date of Request:**	6/25/2018
Author:	Nelson M. Antunes	**Sponsor:**	Carol A. Sedewitz, VP Electric Asset Management
Utility Service:	Electricity T&D	**Project Manager:**	Nelson M. Antunes

1 Executive Summary

1.1 *Sanctioning Summary*

This paper requests project sanction of C051212, C051213, C055584, C055585, C055586, and C055623 in the amount of $85.820M with a tolerance of +/-10% for the purposes of full project implementation.

The sanction amount is $85.820M broken down into:

$82.503M Capex
$0.177M Opex
$3.140M Removal
With a CIAC/Reimbursement of $6.983M

This project has undergone a Capital Efficiency Review with the following determination:

This project has secured the necessary agency approvals to proceed and is in construction. At this stage, re-evaluation of the project design would likely result in significant delays to the project schedule and an increase in cost. This project has been evaluated for any procurement or construction efficiency opportunities.

1.2 *Project Summary*

The projects summarized in Section 1.3 below are described in the "Providence Area Long Term Distribution and Supply Study" ("Providence Study") dated May 2014, and the "Providence Area Long Term Distribution and Supply Study Addendum" ("Study Addendum") dated May 2014. The Providence Study noted the significant asset condition issues at the South Street Substation ("South St. Sub"), the importance of this particular location, and the need to maintain an 11.5kV supply to the downtown Providence network from this location. As a result of these findings, the Providence Study presented a recommended plan to rebuild the South St. Sub.

The project consists of a new substation on the existing South St. Substation site in the City of Providence, R.I. [redacted] and an indoor substation building with indoor metal clad switchgear with 23 positions for 11 kV circuits, 4 position for the 23kV to 11kV transformers and 3 cap banks. [redacted]

1.3 *Summary of Projects*

Project Number	Project Type (Elec only)	Project Title	Estimate Amount ($M)
C051212	D-Sub	South Street Substation Rebuild - Dsub	37.549
C051213	D-Line	South Street Substation Rebuild - Dline	8.833
C055584	T-Sub	South Street Substation Rebuild - Tsub	25.281
C055585	T-Line	South Street Substation Rebuild - Tline	7.969
C055586	Remote Work	South Street Substation Rebuild - Remote Wo	3.120
C055623	Removal	South Street Substation Rebuild - Removal	3.068
		Total	85.820

1.4 *Associated Projects*

N/A

1.5 *Prior Sanctioning History*

Date	Governance Body	Sanctioned Amount	Potential Project Investment	Sanction Type	Potential Investment Tolerance
6/10/2015	**USSC**	**$74.500M**	**$95.350M**	**Partial**	**+/- 25%**
6/25/2014	**USSC**	**$23.74M**	**$64.150M**	**Partial**	**+50%/-25%**

1.6 *Next Planned Sanction Review*

Date (Month/Year)	Purpose of Sanction Review
November 2019	Project Closure Sanction

1.7 *Category*

Category	Reference to Mandate, Policy, NPV, or Other
○ Mandatory ◉ Policy- Driven ○ Justified NPV ○ Other	-National Grid USA Electrical Operations Internal Strategy Document -Distribution Planning Criteria Strategy

1.8 *Asset Management Risk Score*

Asset Management Risk Score: 48

Primary Risk Score Driver: (Policy Driven Projects Only)

◉ Reliability ○ Environment ○ Health & Safety ○ Not Policy Driven

1.9 *Complexity Level*

◉ High Complexity ○ Medium Complexity ○ Low Complexity ○ N/A

Complexity Score: 29

1.10 *Process Hazard Assessment*

A Process Hazard Assessment (PHA) is required for this project:

◉ Yes ○ No

1.11 ***Business Plan***

Business Plan Name & Period	Project included in approved Business Plan?	Over / Under Business Plan	Project Cost relative to approved Business Plan ($)
FY19-23 NE Distribution and Transmission Capital Plan	◉ Yes ○ No	◉ Over ○ Under ○ NA	$2.019M

1.12 ***If cost > approved Business Plan how will this be funded?***

Re-allocation of funds within the portfolio has been managed by Resource Planning to meet jurisdictional, budgetary, statutory and regulatory requirements.

1.13 ***Current Planning Horizon***

		Current Planning Horizon		
		Yr. 1	Yr. 2	
$M	Prior Yrs	2018/19	2019/20	Total
CapEx	72.873	4.569	4.539	81.981
OpEx	0.105	0.104	0.000	0.209
Removal	0.287	0.015	3.328	3.630
CIAC/Reimbursement	(6.983)	0.000	0.000	(6.983)
Total	66.282	4.688	7.867	78.837

1.14 ***Key Milestones***

Milestone	Target Date: (Month/Year)
Partial Sanction	June 2014
Partial Sanction	June 2015
Permitting and Licensing Complete	December 2015

Milestone	Target Date: (Month/Year)
Complete Final Design	November 2016
Start of South Street Substation Construction (T,D & Sub)	February 2016
Ready for Load (In Phases)	January 2018
Project Sanction	June 2018
Complete Cutovers from Existing South Street to New Substation	April 2019
Existing Building and Transmission structure Removal	July 2019
Construction Complete	August 2019
Project Closure Report	November 2019

1.15 *Resources, Operations and Procurement*

Resource Sourcing			
Engineering & Design Resources to be provided	☑ Internal		☑ Contractor
Construction/Implementation Resources to be provided	☑ Internal		☑ Contractor
Resource Delivery			
Availability of internal resources to deliver project:	○ Red	○ Amber	◉ Green
Availability of external resources to deliver project:	○ Red	○ Amber	◉ Green
Operational Impact			
Outage impact on network system:	○ Red	○ Amber	◉ Green
Procurement Impact			
Procurement impact on network system:	○ Red	○ Amber	◉ Green

1.16 *Key Issues (include mitigation of Red or Amber Resources)*

1	Potential transmission outage cancellation
2	Weather events

1.17 *Climate Change*

Contribution to National Grid's 2050 80% emissions reduction target:	◉ Neutral	○ Positive	○ Negative
Impact on adaptability of network for future climate change:	◉ Neutral	○ Positive	○ Negative

1.18 *List References*

1	Providence Area Long Term Distribution and Supply Study, May 2014
2	Providence Area Long Term Distribution and Supply Study Addendum, May 2014
3	Conceptual Engineering Report - New South Street Substation, May 2014
4	Asset Condition Report – South Street Substation, January 2011

REDACTED

2 Decisions

The Senior Executive Sanctioning Committee (SESC) at a meeting held on 6/25/2018:

(a) APPROVED this paper and the investment of $85.820M and a tolerance of +/- 10%

(b) NOTED that Nelson M. Antunes is the Project Manager and has the approved financial delegation.

Signature.....Date.....Jun 28, 2018

Margaret Smyth

US Chief Financial Officer

Chair, Senior Executive Sanctioning Committee

3 Sanction Paper Detail

Title:	South Street Substation	**Sanction Paper #:**	USSC-14-195-V3
Project #:	C051212, C051213, C055584, C055585, C055586, C055623	**Sanction Type:**	Sanction
Operating Company:	Narragansett Electric Co. and Electricity T&D	**Date of Request:**	6/25/2018
Author:	Nelson M. Antunes	**Sponsor:**	Carol A. Sedewitz, VP Electric Asset Management
Utility Service:	Electricity T&D	**Project Manager:**	Nelson M. Antunes

3.1 *Background*

The South Street Substation is a major [redacted] supply substation serving downtown Providence, RI and the surrounding area. In combination with the Franklin Square [redacted] Substation, the two substations serve a combined peak load of approximately 148 MVA. The South Street and Franklin Square substations supply the Providence Downtown network, one 23 kV substation, one 11 kV substation, eight 4 kV distribution substations, [redacted]

In 2014, the Company conducted the Providence Area Long Term Supply and Distribution Study (the Providence Study), which provides a high-level conceptual plan for the future development of the supply and distribution system in the City of Providence and adjacent communities. This study has identified the need for construction of a new [redacted] substation to replace the existing South Street Substation as a result of asset condition issues described in Section 3.2 below.

In the fall of 2013, National Grid was approached [redacted] proposing a large scale project in the immediate area of the South Street Substation. As currently envisioned [redacted], the former South Street Power Station ("Dynamo House") and the adjacent [redacted] property would be used to construct a state-of- [redacted] This redevelopment plan

[1] Societal benefit represented informally by the [redacted] developer consists of job creation on the order of approximately 1,500 construction jobs and 540 permanent jobs with potential economic growth of $29 million in annual earnings and $64 million in statewide economic output.

included three potential factors that could impact the Providence Study recommendations:

- The relocation of the existing South St. Sub (away from the Dynamo House);
- The rebuild of the existing transmission taps to the South St. Sub in an underground configuration; and
- The lease or transfer of a portion of the South St. Sub parcel for construction of a parking garage.

As described above, the Providence Study recommended rebuild or relocation of the South St. Sub on the existing site but away from the Dynamo House . [redacted]

[redacted]

3.2 *Drivers*

The South Street Substation replacement is driven by asset condition concerns. These concerns are described in the Asset Condition Report for the South Street Substation which is summarized in the Providence Study.

The Asset Condition Report for the South Street Substation recommends the replacement of a variety of station components. For instance, the building layout is such that it precludes the implementation of modern installation standards in order to replace original equipment. Additionally, spare parts for the protection components are unavailable and will be irreplaceable in the event of a failure. Lastly, maintenance work is time consuming and because of previously stated issues results in custom site-specific repairs.

Specific issues of poor asset condition exist for the transformers, breakers, switches, feeder reactors, and the battery system. Transformer concerns include past bushing

failures, top cover leaks, and partial internal discharge primarily associated with the #2216 11.5kV to 23kV unit. A number of 11.5kV breakers have reduced fault interrupting performance due to their outdated design. Also, replacement bushings, mechanisms and live parts for these breakers are no longer commercially available. Certain 11.5kV gang operated switches have operational issues. In some of the bays these switches are mounted in such a manner that replacement requires both the #1 and #2 11.5 kV buses to be taken out of service. The existing reactors are the limiting elements for some feeders and cannot be replaced with similar or larger units. Lastly, the battery system is approximately 18 years old and planned for replacement.

3.3 *Project Description*

The proposed project consists of constructing a new South Street substation on the existing South Street site, transferring all 11 kV circuits to the new substation, and [redacted]



A new substation building consisting of two stories and a basement has been constructed. The second floor of the new substation includes metal clad switchgear with 23 positions for 11 kV circuits, 4 position for the 23kV transformer feeds, and positions for the 11kV transformers and 3 cap banks if needed for future use. The control rooms for relay protection and controls are also on the second floor. The first floor will house feeder reactors and feeder-disconnect switches. The bottom floor is a basement for cable routing.

Following the cutover of all 11 kV circuits to the new substation, the existing South Street 11 kV substation will be de-energized. The South Street 11 kV substation building will be removed in 2019 upon the completion of the distribution cutovers.

3.4 *Benefits Summary*

The recommended alternative addresses the indoor substation issues of poor asset condition with the existing South Street Substation.

3.5 *Business and Customer Issues*

The following business issues are associated with the recommended alternative solution:

- The proposed investment is included in National Grid's current Business Plan.
- The Narraganset Electric Company has concluded the existing substation site is suitable for the new South Street substation.
- The Narraganset Electric Company has concluded that there is adequate land available on the existing South Street Substation site to construct the new substation, and to also lease a portion of the site to the developer for construction of a parking garage.

For additional information, refer to the Providence Area Long Term Distribution and Supply Study

3.6 *Alternatives*

The Providence Study notes the importance of the South Street Substation location and the need to retain the 11.5kV supplied downtown Providence network. With this basis and the need to address the poor asset conditions, the study considered a variety of substation rebuild configurations. The recommended plan is the lowest cost station rebuild configuration then modified by the Study Addendum.

[redacted]

3.7 *Safety, Environmental and Project Planning Issues*

A formal and detailed Cutover Plan has been developed for the transfer of all existing 11 kV circuits to the new substation. To assist with this complex outage planning,

[redacted]

with outage planning and is extremely knowledgeable of the electrical system has been contracted to lead this deliverable.

Other required consents would include:

- Rhode Island Department of Environmental Management (RIDEM) approval of the project;
- Rhode Island Coastal Management Resources Council (CMRC) approval of the storm water discharge from the site;
- Rhode Island Energy Facility Siting Board (EFSB) approval of the project

There have been and continue to be environmental impacts associated with the construction of the substation. Specifically, the site abuts the Providence River. The Company designed storm water discharge to be in compliance with CMRC requirements. The Company developed a plan to manage and improve the quality of the rain water runoff from the station's impervious surfaces, including the substation building roof and paved areas.

The site is located in downtown Providence, in the heart of the City's Jewelry District. [redacted]

When possible, the Company coordinated the environmental permitting for the National Grid South Street Substation project with the developer's environmental permitting for the [redacted]

3.8 *Execution Risk Appraisal*

Number	Detailed Description of Risk / Opportunity	Probability	Impact		Score		Strategy	Pre-Trigger Mitigation Plan	Residual Risk	Post Trigger Mitigation Plan
			Cost	Schedule	Cost	Schedule				
1	Obtaining the required scheduled outage	2	2	2	[redacted]		Accept	Develop plan and increase communication between as scheduled outage approaches.	Construction delays may result from outage postponement.	Continue frequent communication until outage work is concluded.
2	Weather	2	2	2	[redacted]		Accept	We do not have a mitigation plan for weather.	N/A	N/A
4	Building Demo	2	1	2	[redacted]		Accept	Risk is accepted and can be retired once the building is taken down.	There are no know residual risks	N/A

3.9 *Permitting*

Permit Name	Probability Required (Certain/ Likely/Unlikely)	Duration To Acquire Permit	Status (Complete/ In Progress Not Applied For)	Estimated Completion Date
Coastal Resource Management Council	Certain	6 mos.	Complete	3/16
Rhode Island Department of Environmental Management	Certain	6 mos.	Complete	3/16
EFSB	Certain	3 mos.	Complete	3/16
Downtown Design Review Comittee	Certain	6 mos.	Complete	3/16

3.10 *Investment Recovery*

3.10.1 Investment Recovery and Regulatory Implications

The investment classification for this project is policy-driven. Specifically it is driven by Asset Management's policy to provide for the networks safe, efficient, and reliable operation. The spending rational is performance/asset condition and the primary driver is reliability. The substation will be in service in FY2019 and has been included in each fiscal year's annual Electrical Infrastructure, Safety, and Reliability (ISR) Plan filing from FY2015.

3.10.2 Customer Impact

Customer impacts have been mitigated and/or avoided through careful outage planning and construction sequencing. Customer outages associated with this project are not expected. However, customers will have improved reliability by addressing the known asset condition related issues.

This project results in an indicative first full year revenue requirement when the asset is placed in service equal to approximately $13.584M. This is indicative only. The actual revenue requirement will differ, depending upon the timing of the next rate case and/or the timing of the next filing in which the Project is included in the rate case.

3.10.3 CIAC / Reimbursement

$M	Prior Yrs	Yr. 2 2018/19	Yr. 3 2019/20	Total
CIAC/Reimbursement	6.983	0.000	0.000	6.983

3.11 *Financial Impact to National Grid*

3.11.1 Cost Summary Table

Project Number	Project Title	Project Estimate Level (%)	Spend ($M)	Prior Yrs	Current Planning Horizon Yr. 1 2018/19	Yr. 2 2019/20	Total
C051212	South Street Substation Rebuild - Dsub	10%	CapEx	35.537	1.802	0.000	37.339
			OpEx	0.008	0.000	0.000	0.008
			Removal	0.002	0.000	0.000	0.002
			Total	35.547	1.802	0.000	37.349
C051213	South Street Substation Rebuild - Dline	10%	CapEx	7.578	1.129	0.018	8.725
			OpEx	0.012	0.104	0.000	0.116
			Removal	0.010	0.000	0.000	0.010
			Total	7.600	1.233	0.018	8.851
C055584	South Street Substation Rebuild - Tsub	10%	CapEx	20.668	1.457	2.820	24.945
			OpEx	0.077	0.000	0.000	0.077
			Removal	0.241	0.000	0.000	0.241
			Total	20.986	1.457	2.820	25.263
C055585	South Street Substation Rebuild - Tline	10%	CapEx	6.461	0.120	0.950	7.531
			OpEx	0.008	0.000	0.000	0.008
			Removal	0.002	0.000	0.428	0.430
			Total	6.471	0.120	1.378	7.969
C055586	South Street Substation Rebuild - Remote Work	10%	CapEx	2.590	0.060	0.569	3.219
			OpEx	0.000	0.000	0.000	0.000
			Removal	0.001	0.000	0.000	0.001
			Total	2.591	0.060	0.569	3.220
C055623	South Street Substation Rebuild - Removal	10%	CapEx	0.039	0.001	0.182	0.222
			OpEx	0.000	0.000	0.000	0.000
			Removal	0.031	0.015	2.900	2.946
			Total	0.070	0.016	3.082	3.168

3.11.2 Project Budget Summary Table

Project Costs per Business Plan - Distribution

		Current Planning Horizon		
		Yr. 1	Yr. 2	
$M		2018/19	2019/20	Total
CapEx		3.720	1.800	5.520
OpEx		0.000	0.000	0.000
Removal		0.000	0.000	0.000
Total Cost in Bus. Plan		3.720	1.800	5.520

Variance (Business Plan-Project Estimate)

		Current Planning Horizon		
		Yr. 1	Yr. 2	
$M		2018/19	2019/20	Total
CapEx		0.789	1.600	2.389
OpEx		(0.104)	0.000	(0.104)
Removal		0.000	0.000	0.000
Total Cost in Bus. Plan		0.685	1.600	2.285

Project Costs per Business Plan - Transmission

		Current Planning Horizon		
		Yr. 1	Yr. 2	
$M		2018/19	2019/20	Total
CapEx		1.637	0.859	2.496
OpEx		0.000	0.000	0.000
Removal		0.120	2.400	2.520
Total Cost in Bus. Plan		1.757	3.259	5.016

Variance (Business Plan-Project Estimate)

		Current Planning Horizon		
		Yr. 1	Yr. 2	
$M		2018/19	2019/20	Total
CapEx		(0.001)	(3.580)	(3.581)
OpEx		0.000	0.000	0.000
Removal		0.105	(0.828)	(0.723)
Total Cost in Bus. Plan		0.104	(4.408)	(4.304)

3.11.3 Cost Assumptions

Cost assumptions based on current project spend, approved project change requests, and estimated remaining project spend.

3.11.4 Net Present Value / Cost Benefit Analysis

3.11.4.1 *NPV Summary Table*

This is not a NPV Project

3.11.4.2 *NPV Assumptions and Calculations*

N/A

3.11.5 Additional Impacts

N/A

3.12 *Statements of Support*

3.12.1 Supporters

The supporters listed have aligned their part of the business to support the project.

Department	Individual	Responsibility
Investment Planning	DiConza, Glen McColgan, Karen	Endorses relative to 5-year business plan or emergent work
Long Term Resource Planning	Stelling, Danielle Govoni, Kevin	Reviewing milestone dates for synchronization with cash flows in order to move projects out of Step 0
Resource Planning	Marceau, Daniel Phillips, Mark	Endorses construction resources, cost estimate, schedule, and portfolio alignment
Asset Management / Planning	Hayduk, Brian Constable, Ryan	Endorses scope, estimate, and schedule with the company's goals, strategies, and objectives
Engineering and Design	Larrabee, Mark Hellmuth, Kevin Deschene, Natasha Swanson, Leonard G.	Endorses scope, design, conformance with design standards
Project Management	Vacher, Shaun / Quesnel, Marc	Endorses resources, cost estimate, schedule
Electric Project Estimation	Duffy, John	Endorses Cost Estimate

3.12.2 Reviewers

The reviewers have provided feedback on the content/language of the paper.

Function	Individual
Finance	Midkiff, Felicia Byrne, Andrew
Regulatory	Turieo, Ed Artuso, Michael
Jurisdictional Delegate(s)	Anand, Sonny Hill, Terron
Procurement	Chevere, Diego
Control Centers (CC)	Gallagher, Michael Lavallee, Philip

4 Appendices

4.1 *Sanction Request Breakdown by Project*

N/A

4.2 *Other Appendices*



South Street Substation building with parking garage on adjacent National Grid parcel.

4.3 *NPV Summary*

N/A

4.4 *Customer Outreach Plan*

Customer outreach has been ongoing for the South Street project. The company has established a working relationship between the National Grid project team for the [redacted]

Additional customer outreach was performed for other stakeholders, including other abutters and City officials.

This document has been redacted for Critical Energy Infrastructure Information (CEII). 6/29/2015

US Sanction Paper

nationalgrid

Title:	South Street Substation Rebuild	**Sanction Paper #:**	USSC-14-195-V2
Project #:	C051212, C051213, C055584, C055585, C055586, C055623	**Sanction Type:**	Partial Sanction
Operating Company:	The Narragansett Electric Company	**Date of Request:**	6-10-15
Author:	Nelson M. Antunes / Bob Galgano / Ryan Constable	**Sponsor:**	John Gavin, VP Asset Management
Utility Service:	Electricity T&D	**Project Manager:**	Nelson M. Antunes

1 Executive Summary

1.1 Sanctioning Summary:

This paper requests partial sanction of C051212, C051213, C055584, C055585, C055586, and C055623 in the amount $74.500M with a tolerance of +/-10% for the purpose of Design Engineering, Permitting, Procurement of long lead equipment and Preliminary Construction.

The sanction amount is $74.500M broken down into:

$71.475M Capex
$0.025M Opex
$3.000M Removal

NOTE: The potential investment of $95.352M less a CIAC of $11.612M results in a net project cost of $83.740M with a tolerance of +/-25% contingent upon submittal and approval of a Project Sanction paper following completion of the scope above.

1.2 Brief Description:

These projects summarized in the document are described in the "Providence Area Long Term Distribution and Supply Study" ("Providence Study"), dated May 2014 and the "Providence Area Long Term Distribution and Supply Study Addendum" ("Study Addendum"), dated May 2014. The study noted the significant asset condition issues at the South Street Substation ("South St. Sub"), concluded the importance of this location, and the need to maintain an 11.5kV supply to the downtown network from this location. As a result of these findings, the study presented a recommended plan to rebuild the South St. Sub. The Study Addendum addresses certain substation design details and timing issues as a result of internal Substation Engineering and Operations consultation and recent, large scale customer driven development.

The project includes a new substation on the existing South Street substation site in the City of Providence, R.I. [redacted] and an indoor substation building with indoor metal clad switchgear with twenty-three positions for 11 kV circuits, four (4) position for the 23kV to 11kV transformers and three (3) cap banks. [redacted]

1.3 Summary of Projects:

Project Number	Project Type (Elec only)	Project Title	Estimate Amount ($M)
C051212	D-Sub	South Street Substation Rebuild	41.895
C051213	D-Line	South Street Substation Rebuild	13.470
C055584	T-Sub	South Street Substation Rebuild	25.641
C055585	T-Line	South Street Substation Rebuild	7.899
C055586	T-Sub	South Street Substation Rebuild - Franklin Sub	3.000
C055623	T-Sub	South Street Substation Rebuild - Demolition	3.445
		Total	95.350

1.4 Associated Projects:

N/A

Project Number	Project Title	Estimate Amount
N/A	N/A	$ -
	Total	$ -

1.5 Prior Sanctioning History (including relevant approved Strategies):

N/A

Date	Governance Body	Sanctioned Amount	Potential Project Investment	Paper Title	Sanction Type	Tolerance
6/25/2014	USSC	$23.740M	$64.150M	South Street Substation Rebuild	Partial Sanction	+50%/-25%

1.6 Next Planned Sanction Review:

Date (Month/Year)	Purpose of Sanction Review
June 2018	Project Sanction South Street Project
March 2020	Projected Closure Sanction Paper

1.7 Category:

Category	Reference to Mandate, Policy, or NPV Assumptions
○ Mandatory ◉ Policy- Driven ○ Justified NPV	National Grid USA EO Internal Strategy Document Distribution Planning Criteria Strategy

1.8 Asset Management Risk Score

Asset Management Risk Score: 48

Primary Risk Score Driver: (Policy Driven Projects Only)

◉ Reliability ○ Environment ○ Health & Safety ○ Not Policy Driven

1.9 Complexity Level: (if applicable)

◉ High Complexity ○ Medium Complexity ○ Low Complexity ○ N/A

Complexity Score: 29

1.10 Process Hazard Assessment

A Process Hazard Assessment (PHA) is required for this project:

◉ Yes ○ No

REDACTED

1.11 Business Plan:

Business Plan Name & Period	Project included in approved Business Plan?	Over / Under Business Plan	Project Cost relative to approved Business Plan ($)
FY16-20 New England Distribution Spending Plan	◉ Yes ○ No	◉ Over ○ Under ○ NA	$33.494M
FY16-20 New England Transmission Spending Plan	◉ Yes ○ No	◉ Over ○ Under ○ NA	$13.865M

1.12 If cost > approved Business Plan how will this be funded?

Re-allocation of funds within the portfolio will be managed by Resource Planning to meet jurisdictional, budgetary, statutory and regulatory requirements.

1.13 Current Planning Horizon:

Current Planning Horizon – Total Project Cost:

		Current Planning Horizon						
		Yr. 1	Yr. 2	Yr. 3	Yr. 4	Yr. 5	Yr. 6 +	
$M	Prior Yrs	2015/16	2016/17	2017/18	2018/19	2019/20	2020/21	Total
CapEx	0.217	11.713	45.316	22.984	3.495	7.736	0.000	91.461
OpEx	0.000	0.000	0.006	0.006	0.006	0.007	0.000	0.025
Removal	0.017	0.012	0.017	0.017	0.234	3.567	0.000	3.864
CIAC/Reimbursement	0.000	(10.916)	0.000	0.000	(0.696)	0.000	0.000	(11.612)
Total	0.234	0.809	45.339	23.007	3.039	11.310	0.000	83.738

Current Planning Horizon – Distribution:

		Current Planning Horizon						
		Yr. 1	Yr. 2	Yr. 3	Yr. 4	Yr. 5	Yr. 6 +	
$M	Prior Yrs	2015/16	2016/17	2017/18	2018/19	2019/20	2020/21	Total
CapEx	0.062	7.114	20.099	20.623	2.428	5.019	0.000	55.345
OpEx	0.000	0.000	0.006	0.006	0.006	0.002	0.000	0.020
Removal	0.000	0.000	0.000	0.000	0.000	0.000	0.000	0.000
CIAC/Reimbursement	0.000	0.000	0.000	0.000	0.000	0.000	0.000	0.000
Total	0.062	7.114	20.105	20.629	2.434	5.021	0.000	55.365

REDACTED

Current Planning Horizon - Transmission

		Current Planning Horizon						
$M	Prior Yrs	Yr. 1 2015/16	Yr. 2 2016/17	Yr. 3 2017/18	Yr. 4 2018/19	Yr. 5 2019/20	Yr. 6 + 2020/21	Total
CapEx	0.155	4.599	25.217	2.361	1.067	2.717	0.000	36.116
OpEx	0.000	0.000	0.000	0.000	0.000	0.005	0.000	0.005
Removal	0.017	0.012	0.017	0.017	0.234	3.567	0.000	3.864
CIAC/Reimbursement	0.000	(10.916)	0.000	0.000	(0.696)	0.000	0.000	(11.612)
Total	0.172	(6.305)	25.234	2.378	0.605	6.289	0.000	28.373

1.14 Key Milestones

Milestone	**Target Date: (Month/Year)**
Partial Sanction	June 2015
Permitting and Licensing Complete	December 2015
Complete Final Design	November 2016
Start of South Street Substation Construction (T,D & Sub)	February 2016
Ready for Load (In Phases)	November 2018
Complete Cutovers from Existing South Street to New Substation	April 2019
Existing Building Removal	July 2019
Construction Complete	August 2019
Project Closure Report	March 2020

1.15 Resources, Operations and Procurement:

Resource Sourcing			
Engineering & Design Resources to be provided	☑ Internal		☑ Contractor
Construction/Implementation Resources to be provided	☑ Internal		☑ Contractor
Resource Delivery			
Availability of internal resources to deliver project:	○ Red	○ Amber	◉ Green

Availability of external resources to deliver project:	○ Red	○ Amber	◉ Green
Operational Impact			
Outage impact on network system:	○ Red	○ Amber	◉ Green
Procurement Impact			
Procurement impact on network system:	○ Red	○ Amber	◉ Green

1.16 Key Issues (include mitigation of Red or Amber Resources):

1	Receipt of Permits (RIDEM, CRMC, EFSB, Zoning)
2	Timely customer payment of cost for undergrounding the 115 kV transmission line.
3	Development and execution of 11 kV circuit cutover plan.
4	Coordination with other ongoing construction in the immediate area of project

1.17 Climate Change:

Contribution to National Grid's 2050 80% emissions reduction target:	◉ Neutral	○ Positive	○ Negative
Impact on adaptability of network for future climate change:	◉ Neutral	○ Positive	○ Negative

1.18 List References:

1	Providence Area Long Term Distribution and Supply Study, May 2014
2	Providence Area Long Term Distribution and Supply Study Addendum, May 2014
3	Conceptual Engineering Report - New South Street Substation, May 2014
4	Asset Condition Report – South Street Substation, January 2011

REDACTED

2 Decisions

The US Sanctioning Committee (USSC) at a meeting held on June 10, 2015:

(a) APPROVED the investment of $74.500M and a tolerance of +/-10% for the purpose of Design Engineering, Permitting, Procurement of major Equipment and Preliminary Construction for the reasons stated above.

(b) NOTED the potential investment of $95.352M less a CIAC of $11.612M with a tolerance of +/-25%, contingent upon submittal and approval of a Project Sanction paper following completion of Design Engineering, Permit approvals, and the start of construction activities.

(c) NOTED that Nelson Antunes is the Project Manager and Sonny Anand has the approved financial delegation to undertake the activities stated in (a).

Signature.....Date. 6/29/15

Margaret Smyth
US Chief Financial Officer
Chair, US Sanctioning Committee

3 *Sanction Paper Detail*

Title:	South Street Substation	**Sanction Paper #:**	USSC-14-195-V2
Project #:	C051212, C051213, C055584, C055585, C055586, C055623	**Sanction Type:**	Partial Sanction
Operating Company:	The Narragansett Electric Company	**Date of Request:**	6-10-2015
Author:	Nelson M. Antunes / Bob Galgano / Ryan Constable	**Sponsor:**	John Gavin, VP Asset Management
Utility Service:	Electricity T&D	**Project Manager:**	Nelson M. Antunes

3.1 Background

South Street substation is a major [redacted] supply substation serving downtown Providence, RI and the surrounding area. In combination with the Franklin Square [redacted] substation, the two substations serve a combined peak load of approximately 148 MVA. The South Street and Franklin Square substations supply the Providence Downtown network, one 23 kV substation, one 11 kV substation, eight (8) 4 kV distribution substations, the [redacted]

Figures 4.2.1 through 4.2.3 and Figures 4.2.4 through 4.2.6 show one line electric diagrams and site pictures respectively of the South St Sub and surrounding facilities. Figures 4.2.4 through 4.2.6 show pictures of the existing South St Substation.

The Providence Area Long Term Supply and Distribution Study provide a high-level conceptual plan for the future development of the supply and distribution system in the City of Providence and adjacent communities. This study has identified the need for construction of a new [redacted] substation to replace the existing South Street substation as a result of asset condition issues described in Section 3.2.

In the Fall of 2013, National Grid was approached by a developer proposing a large scale project in the immediate area of the South Street Substation. As currently envisioned by the developer, the former South Street Power Station ("Dynamo House") and the adjacent [redacted] property would be used to construct [redacted] This redevelopment plan

[1] Societal benefit represented informally by the [redacted] developer as job creation on the order or approximately 1,500 construction jobs and 540 permanent jobs with potential economic growth of $29 million in annual earnings and $64 million in statewide economic output.

included three potential factors that could impact the Providence Study recommendations:

- The relocation of the existing South St. Sub (away from the Dynamo House);
- The rebuild of the existing transmission taps to South St. Sub in an underground configuration;
- The lease or transfer of a portion of the South St. Sub parcel for construction of a parking garage.



3.2 Drivers

South Street Substation replacement is driven by asset condition concerns. These concerns are described in the Asset Condition Report for the South Street Substation which is summarized in the Providence Area Long Term Distribution and Supply Study.

The Asset Condition Report for the South Street substation describes issues and recommends the replacement of a variety of station components. The building layout is such that it precludes the implementation of modern installation standards in order to replace original equipment. Additionally, spare parts for the protection components are unavailable and will be irreplaceable in the event of a failure. Lastly, maintenance work is time consuming and because of previously stated issues results in custom site-specific repairs.

Specific asset condition issues exist for the transformers, breakers, switches, feeder reactors, and the battery system. Transformer concerns include past bushing failures, top cover leaks, and partial internal discharge primarily associated with the #2216 11.5kV to 23kV unit. A number of 11.5kV breakers have reduced fault interrupting performance due to their outdated design. Also, replacement bushings, mechanisms and live parts for these breakers are no longer commercially available. Certain 11.5kV gang operated switches have operational issues. In some of the bays these switches are mounted in such a manner that replacement requires both the #1 and #2 11.5 kV buses to be taken out of service. The existing reactors are the limiting elements for some feeders and cannot be replaced with similar or larger units. Lastly, the battery system is approximately 18 years old and planned for replacement.

3.3 Project Description

The proposed project consists of constructing a new South Street substation on the existing South Street site, transferring all 11 kV circuits to the new substation, and [redacted]



A new substation building will be constructed, two stories tall with a basement. [redacted] and an indoor substation building with indoor metal clad switchgear with twenty-three (23) positions for 11 kV circuits, four (4) position for the 23kV to 11kV transforms and three (3) cap banks. The control rooms for relay protection and controls are also on the second floor. The first floor will house feeder reactors and feeder disconnect switches. The bottom floor is a basement for cable routing.

Following the cutover of all 11 kV circuits to the new substation, the existing South Street 11 kV substation will be de-energized. The South Street 11 kV substation building will be removed following the cutover completion.

REDACTED

3.4 Benefits Summary

The recommended alternative addresses the indoor substation asset condition issues with the existing South Street substation.

3.5 Business and Customer Issues

The following business issues are associated with the recommended alternative solution:

- The proposed investment is included in National Grid's current Business Plan. However, based on the Planning Estimate that was created by ECOE, the current budget is much lower then the project cost.
- NEC has concluded the existing substation site is suitable for the new South Street substation.
- NEC has concluded there is adequate land available on the existing South Street substation site to construct the new substation, and to also lease a portion of the site to the developer for construction of a parking garage.

3.6 Alternatives

The Providence Study notes the importance of the South Street Substation location and the need to retain the 11.5kV supplied downtown network. With this basis and the need to address the asset conditions, the study considered a variety of substation rebuild configurations. The recommended plan is the lowest cost station rebuild configuration then modified by the Study Addendum.

[redacted]

3.7 Safety, Environmental and Project Planning Issues

A formal and detailed Cutover Plan will be developed for the transfer of all existing 11 kV circuits to the new substation. This Plan will be developed during the Final Engineering and Design Phase. To assist with this complex outage planning, EIG who

has been supporting the NEEWS project with outage planning and is extremely knowledgeable of the electrical system, has been contracted to lead this deliverable.

Other required consents would include:

- Rhode Island Department of Environmental Management (RIDEM) approval of the project
- Rhode Island Coastal Management Resources Council (CMRC) approval of the storm water discharge from the site.
- Energy Facilities Siting Board (EFSB) approval of the project

There are environmental impacts associated with the construction of the substation. Specifically, the site abuts the Providence River. Storm water discharge will need to be in compliance with CMRC requirements. A plan will be developed to manage and improve the quality of the rain water runoff from the station's impervious surfaces, including the substation building roof and paved areas.

The site is located in downtown Providence, in the heart of the city's Jewelry District. Appropriate substation screening for an urban site will be provided. [redacted]

Whenever possible, the Environmental Permitting for the National Grid South Street substation project will coordinate with the developer's environmental permitting for the [redacted].

3.8 Execution Risk Appraisal

Number	Detailed Description of Risk / Opportunity	Probability	Impact		Score		Strategy	Pre-Trigger Mitigation Plan	Residual Risk	Post Trigger Mitigation Plan
			Cost	Schedule	Cost	Schedule				
1	Approval of RIDEM Permit	2	2	3	4	4	Mitigate	Design facilities to avoid/minimize and construct utilizing accepted practices.	Design modifications may be required	Keep design group coordinated for a review of design options
2	CRMC Approval	2	2	2	4	4	Mitigate	Design facilities to incorporate CRMC stormwater requirements	Design modifications may be required	Keep design group coordinated for a review of design options.
3	Obtaining the required scheduled outage	2	2	2	4	4	Accept	Develop plan and increase communication between as scheduled outage approaches.	Construction delays may result from outage postponement.	Continue frequent communication until outage work is concluded.
4	Distribution underground cables will not be able to be tied into exiting cables where desired	3	5	3	15	9	Accept	Vendor to complete a manhole survey.	Will need to change the splicing location.	Increase available space within manhole by removing abandoned cable.
5	Site Contamination; cost savings associated with site elevation	1	3	2	3	2	Mitigate	Risk is mitigated by elevating the site and can be retired once site work is completed	If elevation can be raised, there should not be any risidual risk.	N/A
6	Transmission Line excavations	2	1	2	2	4	Accept	Risk is accepted and can be retired once the ductbanks are installed	Delay in construction	N/A
7	Building Demo	2	1	2	2	4	Accept	Risk is accepted and can be retired once the building is taken down.	There are no know residual risks	N/A
8	Work Delay Due to coordinating construction schedules with [redacted] construction schedule	1	1	1	1	1	Mitigate	Coordinate work with the [redacted] develpers by having monthly construction updates.	Unknown construction delays by the [redacted] developers	Continue to meet with the [redacted] developers until the project is complete
	Total Risk $:	***$10.8M***								

DIV 4-4 Attachment: Page 252 of 656

REDACTED

3.9 Permitting

Permit Name	Probability Required (Certain/ Likely/Unlikely)	Duration To Acquire Permit	Status (Complete/ In Progress Not Applied For)	Estimated Completion Date
CMRC	Certain	6 mos.	Not Applied For	12/15
RIDEM	Certain	6 mos.	Not Applied For	12/15
EFSB	Certain	3 mos.	Not Applied For	12/15
USACE	Possible	6 mos.	Not Applied For	12/15

3.10 Investment Recovery

3.10.1 Investment Recovery and Regulatory Implications

Based on current schedules the substation will enter service in FY'19 and will be included in each Fiscal year's Annual ISR Filing until that time.

3.10.2 Customer Impact

This Project results in an indicative first full year revenue requirement when the asset is placed in service equal to approximately $9.94M. This is indicative only. The actual revenue requirement will differ, depending upon the timing of the next rate case and/or the timing of the next filing in which the Project is included in the rate case.

3.10.3 CIAC / Reimbursement

[redacted] The CIAC amount that has been derived is estimated. Actual reimbursement to be determined once the EPC contractor begins the preliminary engineering of the project.

$M	Prior Yrs	Yr. 1 2015/16	Yr. 2 2016/17	Yr. 3 2017/18	Yr. 4 2018/19	Yr. 5 2019/20	Yr. 6 + 2020/21	Total
CIAC/Reimbursement	0.000	10.916	0.000	0.000	0.696	0.000	0.000	11.612

REDACTED

3.11 Financial Impact to National Grid

3.11.1 Cost Summary Table

Project Number	Project Title	Project Estimate Level (%)	Spend ($M)	Prior Yrs	Current Planning Horizon Yr. 1 2015/16	Yr. 2 2016/17	Yr. 3 2017/18	Yr. 4 2018/19	Yr. 5 2019/20	Total
C051212	South Street Substation Rebuild	+/- 10%	CapEx	0.041	5.484	14.978	15.990	1.583	3.809	41.885
			OpEx	0.000	0.000	0.003	0.003	0.003	0.001	0.010
			Removal	0.000	0.000	0.000	0.000	0.000	0.000	0.000
			Total	0.041	5.484	14.981	15.993	1.586	3.810	41.895
C051213	South Street Substation Rebuild	+/- 10%	CapEx	0.021	1.630	5.121	4.633	0.845	1.210	13.460
			OpEx	0.000	0.000	0.003	0.003	0.003	0.001	0.010
			Removal	0.000	0.000	0.000	0.000	0.000	0.000	0.000
			Total	0.021	1.630	5.124	4.636	0.848	1.211	13.470
C055584	South Street Substation Rebuild	+/- 10%	CapEx	0.138	3.096	17.959	2.081	0.833	1.534	25.641
			OpEx	0.000	0.000	0.000	0.000	0.000	0.000	0.000
			Removal	0.000	0.000	0.000	0.000	0.000	0.000	0.000
			Total	0.138	3.096	17.959	2.081	0.833	1.534	25.641
C055585	South Street Substation Rebuild	+/- 10%	CapEx	0.000	0.764	5.468	0.115	0.216	0.912	7.475
			OpEx	0.000	0.000	0.000	0.000	0.000	0.005	0.005
			Removal	0.000	0.000	0.005	0.005	0.005	0.404	0.419
			Total	0.000	0.764	5.473	0.120	0.221	1.321	7.899
C055586	South Street Substation Rebuild - Franklin Substation Upgrades	+/- 10%	CapEx	0.017	0.739	1.790	0.165	0.018	0.271	3.000
			OpEx	0.000	0.000	0.000	0.000	0.000	0.000	0.000
			Removal	0.000	0.000	0.000	0.000	0.000	0.000	0.000
			Total	0.017	0.739	1.790	0.165	0.018	0.271	3.000
C055623	South Street Substation Rebuild - Demolition	+/- 10%	CapEx	0.000	0.000	0.000	0.000	0.000	0.000	0.000
			OpEx	0.000	0.000	0.000	0.000	0.000	0.000	0.000
			Removal	0.017	0.012	0.012	0.012	0.229	3.163	3.445
			Total	0.017	0.012	0.012	0.012	0.229	3.163	3.445
Total Project Sanction			CapEx	0.217	11.713	45.316	22.984	3.495	7.736	91.461
			OpEx	0.000	0.000	0.006	0.006	0.006	0.007	0.025
			Removal	0.017	0.012	0.017	0.017	0.234	3.567	3.864
			Total	0.234	11.725	45.339	23.007	3.735	11.310	95.350

3.11.2 Project Budget Summary Table

Project Costs per Business Plan-Transmission

		Current Planning Horizon					
$M	Prior Yrs (Actual)	Yr. 1 2015/16	Yr. 2 2016/17	Yr. 3 2017/18	Yr. 4 2018/19	Yr. 5 2019/20	Total
CapEx	0.155	3.194	9.899	8.203	0.000	0.000	21.452
OpEx	0.000	0.070	0.104	0.086	0.000	0.000	0.260
Removal	0.000	0.246	0.417	0.301	0.000	0.000	0.963
Total Cost in Bus. Plan	0.155	3.510	10.420	8.590	0.000	0.000	22.675

Variance (Business Plan-Project Estimate)

		Current Planning Horizon					
$M	Prior Yrs (Actual)	Yr. 1 2015/16	Yr. 2 2016/17	Yr. 3 2017/18	Yr. 4 2018/19	Yr. 5 2019/20	Total
CapEx	0.000	(1.405)	(15.318)	5.842	(1.067)	(2.717)	(14.664)
OpEx	0.000	0.070	0.104	0.086	0.000	(0.005)	0.255
Removal	0.000	0.246	0.412	0.296	(0.005)	(0.404)	0.544
Total Cost in Bus. Plan	0.000	(1.089)	(14.802)	6.224	(1.072)	(3.126)	(13.865)

Project Costs per Business Plan-Distribution

		Current Planning Horizon					
$M	Prior Yrs (Actual)	Yr. 1 2015/16	Yr. 2 2016/17	Yr. 3 2017/18	Yr. 4 2018/19	Yr. 5 2019/20	Total
CapEx	0.062	4.560	7.260	5.990	0.000	0.000	17.872
OpEx	0.000	0.124	0.197	0.163	0.000	0.000	0.484
Removal	0.017	0.445	2.841	3.158	0.500	0.000	6.960
Total Cost in Bus. Plan	0.079	5.129	10.298	9.311	0.500	0.000	25.316

Variance (Business Plan-Project Estimate)

		Current Planning Horizon					
$M	Prior Yrs (Actual)	Yr. 1 2015/16	Yr. 2 2016/17	Yr. 3 2017/18	Yr. 4 2018/19	Yr. 5 2019/20	Total
CapEx	0.000	(2.554)	(12.839)	(14.633)	(2.428)	(5.019)	(37.473)
OpEx	0.000	0.124	0.191	0.157	(0.006)	(0.002)	0.464
Removal	0.000	0.433	2.829	3.146	0.271	(3.163)	3.515
Total Cost in Bus. Plan	0.000	(1.998)	(9.819)	(11.330)	(2.163)	(8.184)	(33.494)

3.11.3 Cost Assumptions

3.11.4 Net Present Value / Cost Benefit Analysis – Not Financially Driven

Economic measures	5yr	10yr	20yr	Comment
NPV @ Discount rate				
IRR				
MIRR				
Simple Payback in Years				
Total O&M				
Total Capital Investment				
Total Savings				

3.11.5 Additional Impacts - There are no additional impacts to be considered.

3.12 Statements of Support

3.12.1 Supporters

Function	Area	Individual	Responsibility
Investment Planner	Transmission NE	Michelle Park	Endorses relative to 5-year business plan or emergent work.
Investment Planner	Dist. NE	Glen Diconza	Endorses relative to 5-year business plan or emergent work.
Resource Planning	Distribution - New England	Anne Wyman	Endorses Resources, cost estimate, schedule, and Portfolio Alignment
Resource Planning	Trans. Line & Substation - New England	Mark Phillips	Endorses Resources, cost estimate, schedule, and Portfolio Alignment
Engineering & Design	Transmission Planning Projects	Kasia Kulbacka Lisa Sasur	Endorses scope, design, conformance with design standards
Engineering & Design	Substations	Suzan Martuscello	Endorses scope, design, conformance with design standards

REDACTED

Engineering & Design	Transmission & Sub-T Line	Mark Browne	Endorses scope, design, conformance with design standards
Engineering & Design	Protection & Telecom	Leonard Swanson	Endorses scope, design, conformance with design standards
Engineering & Design	Dist. Line and Sub. and Sub.-T Planning	Alan Labarre	Endorses scope, design, conformance with design standards
Project Management	T&D Line NE	Sonny Anand	Endorses resource, cost estimate and schedule

3.12.2 Reviewers

Function	**Individual**
Finance	Keith Fowler
	Philip Horowitz
Regulatory	Peter Zschokke
Jurisdictional Delegate	Jim Patterson
	Carol Sedewitz
Procurement	Art Curran
Control Centers (CC)	John Baudanza
	Michael Gallagher
	Will Houston

4 Appendices

4.1 Sanction Request Breakdown by Project (Partial Sanction only)

$M	C051212	C051213	C055584	C055585	C055586	C055623	Total
CapEx	41.885	13.460	25.651	7.472	3.000	0.000	91.468
OpEx	0.010	0.010	0.000	0.005	0.000	0.000	0.025
Removal	0.000	0.000	0.000	0.404	0.000	3.455	3.859
Total	41.895	13.470	25.651	7.881	3.000	3.455	95.352

REDACTED

4.2 Other Appendices [When inserting pictures/drawings use compress feature]

(This page is purposely left blank)

DIV 4-4 Attachment: Page 258 of 656

nationalgrid

4.2.1 Existing One Line Diagram: South Street, Providence Area 11 kV

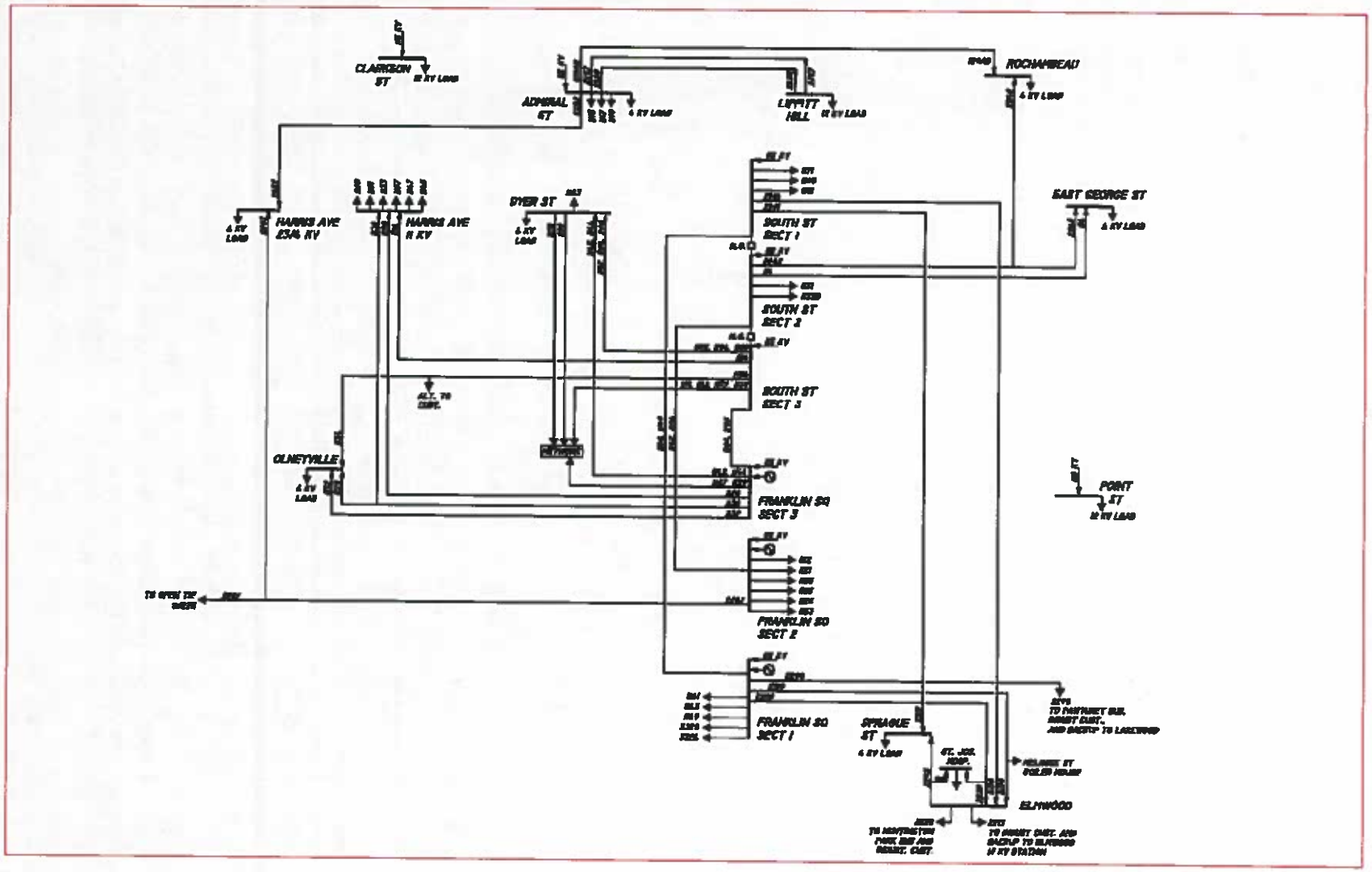

REDACTED



DIV 4-4 Attachment: Page 260 of 656

REDACTED

REDACTED

nationalgrid

4.2.3 Existing One Line Diagram: South Street, 11 kV Section 1 of 3 (Typical of 3)

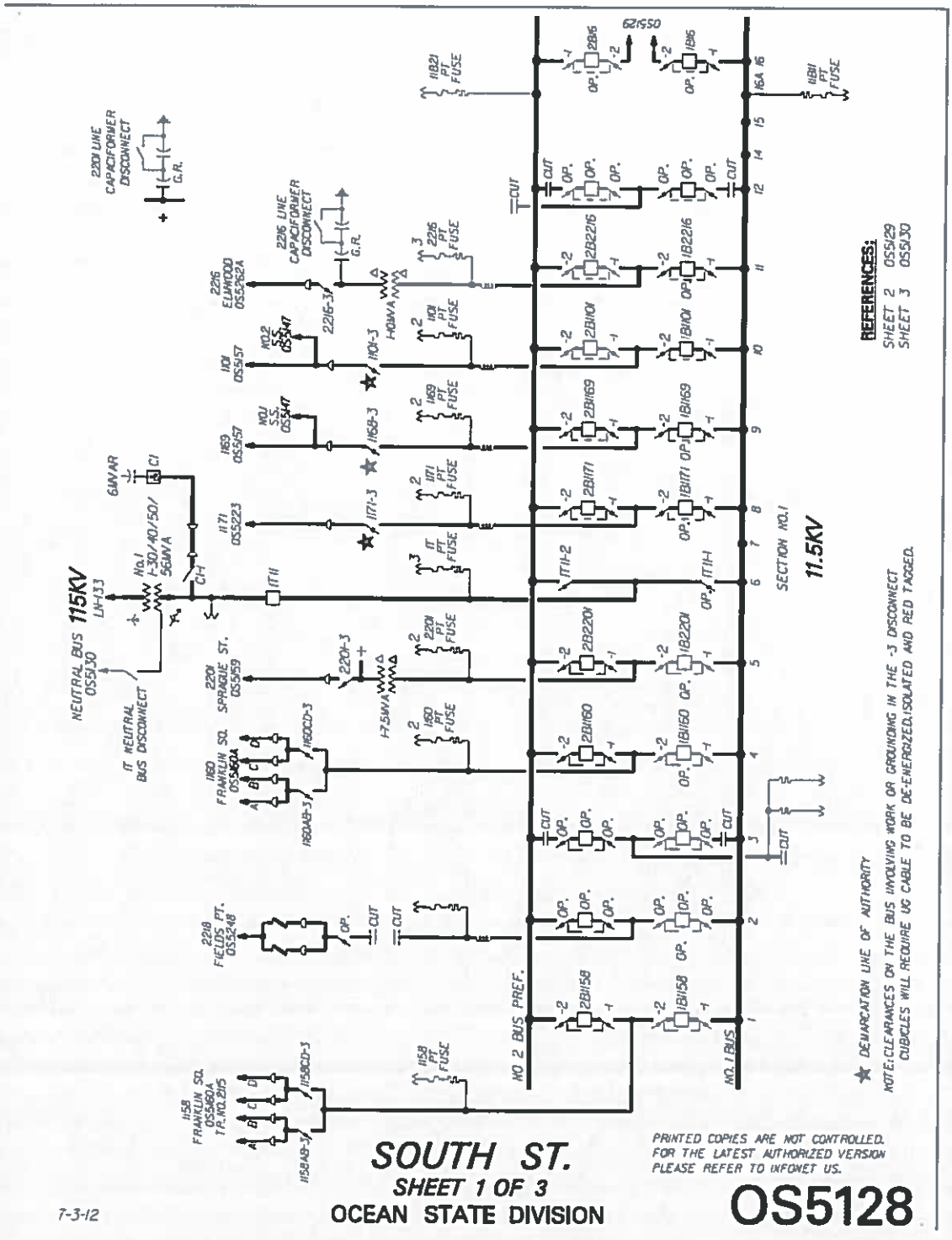

DIV 4-4 Attachment: Page 261 of 656

nationalgrid

4.2.4 Existing South Street Substation Site

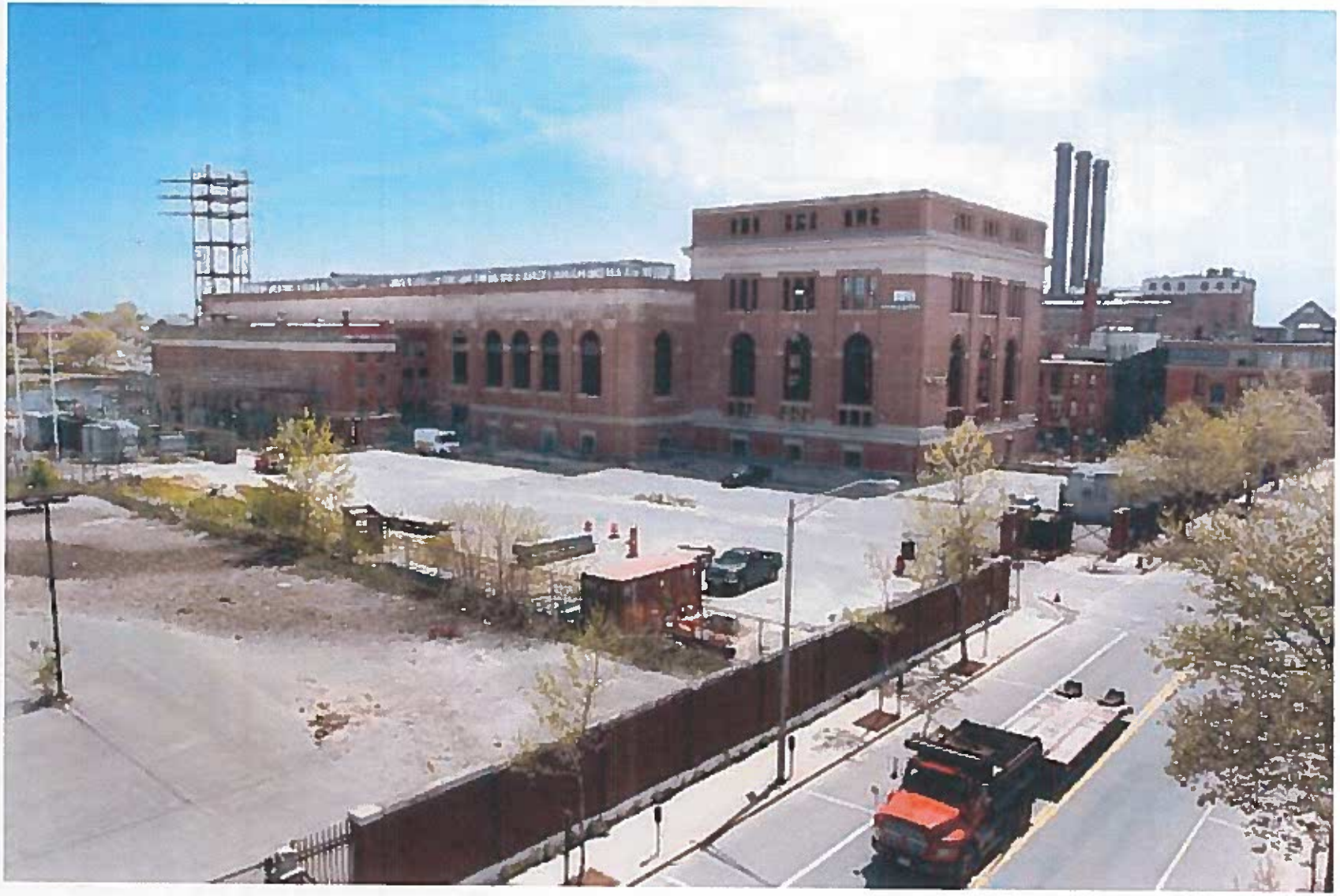

DIV 4-4 Attachment: Page 262 of 656

REDACTED

nationalgrid

4.2.5 Existing South Street Substation Building



DIV 4-4 Attachment: Page 263 of 656

REDACTED

nationalgrid

4.2.6 Existing South Street Substation Indoor 11 kV



DIV 4-4 Attachment: Page 264 of 656

REDACTED

nationalgrid

4.2.7 Proposed South Street Substation 115 kV Supply Cable Routes

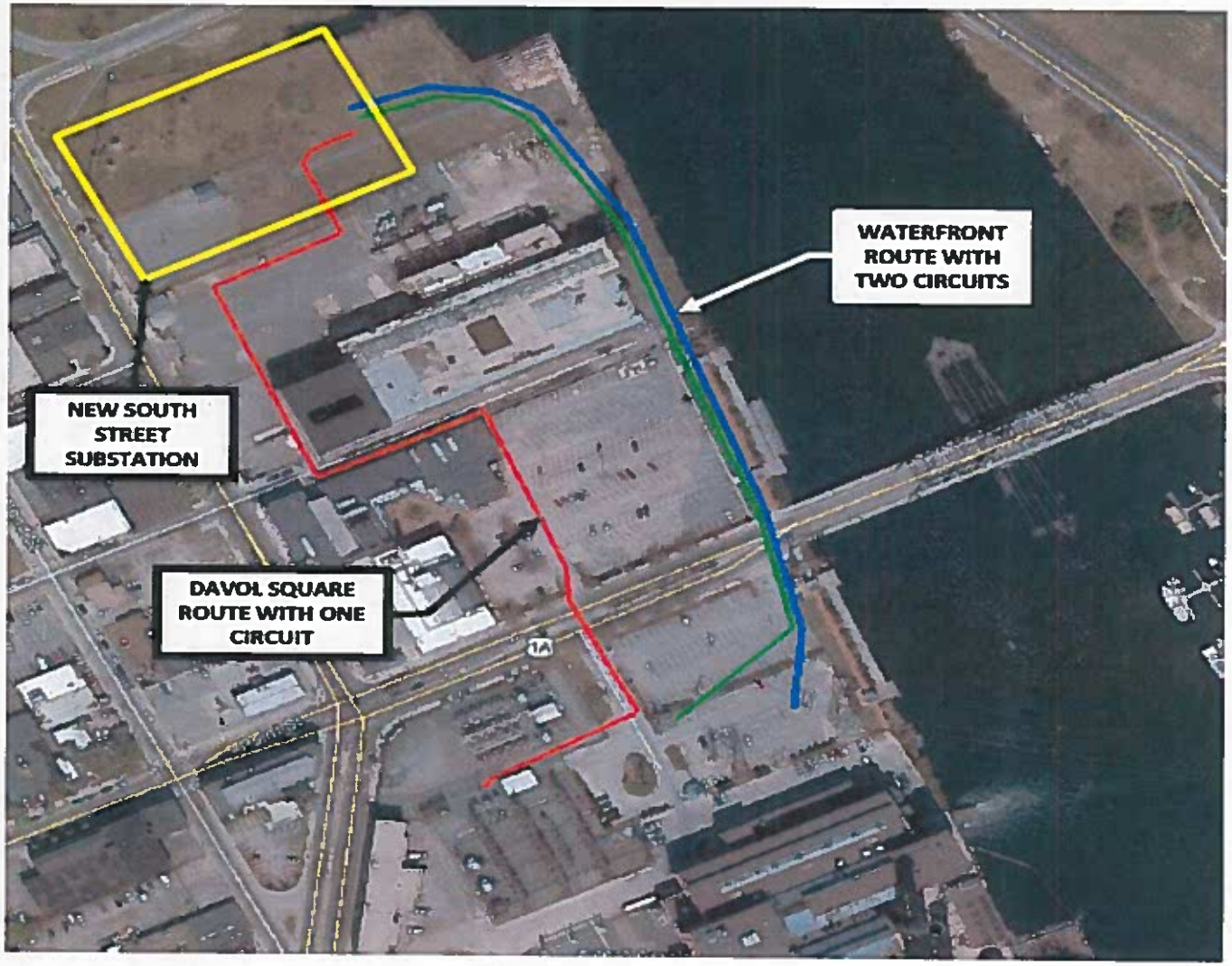

DIV 4-4 Attachment: Page 265 of 656

REDACTED

REDACTED

4.3 NPV Summary (if applicable) - Not Applicable

4.4 Customer Outreach Plan (if applicable)

Customer outreach has begun and is ongoing for the South Street project. A working relationship has been established between the National Grid project team for [redacted] Environmental permitting efforts are being coordinated.

Additional customer outreach is planned for other stakeholders, including other abutters and City officials.

THIS PAGE INTENTIONALLY LEFT BLANK

This document has been redacted for Critical Energy Infrastructure Information (CEII). 7/16/2014

US Sanction Paper

nationalgrid

Title:	South Street Substation Rebuild	**Sanction Paper #:**	USSC-14-195
Project #:	C051212, C051213, C055584, C055585, C055586, C055623	**Sanction Type:**	Partial Sanction
Operating Company:	The Narragansett Electric Company	**Date of Request:**	6-25-14
Author:	Robert Galgano/Ryan Constable	**Sponsor:**	John Gavin, Acting Vice President Network Strategy
Utility Service:	Electricity T&D	**Project Manager:**	Nelson Antunes

1 Executive Summary

1.1 Sanctioning Summary:

This paper requests partial sanction of C051212, C051213, C055584, C055585, C055586, and C055623 in the amount $23.740M with a tolerance of +/-10% for the purpose of Design Engineering, Permitting, Procurement of long lead equipment and Preliminary Construction.

The sanction amount is $23.740M broken down into:

$23.350M Capex
$0.120M Opex
$0.270M Removal

NOTE: The potential investment of $64.15M less a CIAC of $11.06M results in a net project cost of $53.09M with a tolerance of +50%/-25%, contingent upon submittal and approval of a Project Sanction paper following completion of the scope above.

1.2 Brief Description:

These projects summarized in the document are described in the "Providence Area Long Term Distribution and Supply Study" ("Providence Study"), dated May 2014 and the "Providence Area Long Term Distribution and Supply Study Addendum" ("Study Addendum"), dated May 2014. The study noted the significant asset condition issues at the South Street Substation ("South St. Sub"), concluded the importance of this location, and the need to maintain an 11.5kV supply to the downtown network from this location. As a result of these findings, the study presented a recommended plan to rebuild the South St. Sub. The Study Addendum addresses certain substation design details and timing issues as a result of internal Substation Engineering and Operations consultation and recent, large scale customer driven development.

The project includes a new substation on the existing South Street substation site in the City of Providence, R.I. [redacted], an indoor substation building with indoor metal clad switchgear and thirty two (32) positions for 11 kV circuits, [redacted]

1.3 Summary of Projects:

Project Number	Project Type (Elec only)	Project Title	Estimate Amount ($M)
C051212	D-Sub	South St repl indoor subst D-SUB	$ 18.400
C051213	D-Line	South St repl indoor subst D-LINE	$ 1.850
C055584	T-Sub	South Street Substation Rebuild	$ 26.040
C055585	T-Line	T1/T2/T3 Circuits Rebuild	$ 10.030
C055586	T-Sub	T1/T2/T3 Circuits Rebuild (Franklin Sq)	$ 1.030
C055623	D-Sub	South St Sub 11kV Removal	$ 6.800
		Total	$ 64.150

1.4 Associated Projects:

N/A

Project Number	Project Title	Estimate Amount
N/A	N/A	$ -
	Total	$ -

1.5 Prior Sanctioning History (including relevant approved Strategies):

N/A

Date	Governance Body	Sanctioned Amount	Paper Title	Sanction Type
N/A	N/A	N/A	N/A	N/A

1.6 Next Planned Sanction Review:

Date (Month/Year)	Purpose of Sanction Review
December 2014	Project Sanction South Street Project
March 2020	Projected Closure Sanction Paper

REDACTED

1.7 Category:

Category	Reference to Mandate, Policy, or NPV Assumptions
○ Mandatory	
◉ Policy- Driven	National Grid USA EO Internal Strategy Document Distribution Planning Criteria Strategy
○ Justified NPV	

1.8 Asset Management Risk Score

Asset Management Risk Score: 48

Primary Risk Score Driver: (Policy Driven Projects Only)

◉ Reliability ○ Environment ○ Health & Safety ○ Not Policy Driven

1.9 Complexity Level: (if applicable)

◉ High Complexity ○ Medium Complexity ○ Low Complexity ○ N/A

Complexity Score: 29

1.10 Process Hazard Assessment

A Process Hazard Assessment (PHA) is required for this project:

◉ Yes ○ No

1.11 Business Plan:

Business Plan Name & Period	Project included in approved Business Plan?	Over / Under Business Plan	Project Cost relative to approved Business Plan ($)
FY15-FY19 New England Electric Distribution and Subtransmission Spending Plan	◉ Yes ○ No	○ Over ◉ Under ○ NA	$16.33M
FY15-FY19 New England Electric Transmission Spending Plan	○ Yes ◉ No	◉ Over ○ Under ○ NA	$26.1M (Including CIAC)

1.12 If cost > approved Business Plan how will this be funded?

Re-allocation of funds within the portfolio will be managed by Resource Planning to meet jurisdictional, budgetary, statutory and regulatory requirements.

1.13 Current Planning Horizon:

		Current Planning Horizon ($M)						
	Prior Yrs	Yr. 1 2014/15	Yr. 2 2015/16	Yr. 3 2016/17	Yr. 4 2017/18	Yr. 5 2018/19	Yr. 6 + 2019/20	Total
CapEx	$ -	$ 3.180	$ 13.300	$ 20.750	$ 15.950	$ 0.020	$ -	$ 53.200
OpEx	$ -	$ 0.070	$ 0.210	$ 0.320	$ 0.250	$ 0.020	$ -	$ 0.870
Removal	$ -	$ 0.300	$ 1.260	$ 3.400	$ 3.080	$ 2.040	$ -	$ 10.080
CIAC/Reimbursement	$ -	$ (1.100)	$ (2.760)	$ (3.880)	$ (3.320)	$ -	$ -	$(11.060)
Total	$ -	$ 2.450	$ 12.010	$ 20.590	$ 15.960	$ 2.080	$ -	$ 53.090

Current Planning Horizon – Distribution

	Prior Yrs	Yr. 1 2014/15	Yr. 2 2015/16	Yr. 3 2016/17	Yr. 4 2017/18	Yr. 5 2018/19	Yr. 6 + 2019/20	Total
CapEx	$ -	$ 0.930	$ 4.560	$ 7.270	$ 5.460	$ 0.020	$ -	$ 18.240
OpEx	$ -	$ 0.040	$ 0.110	$ 0.160	$ 0.120	$ 0.020	$ -	$ 0.450
Removal	$ -	$ 0.180	$ 0.830	$ 2.740	$ 2.570	$ 2.040	$ -	$ 8.360
CIAC/Reimbursement	$ -	$ -	$ -	$ -	$ -	$ -	$ -	$ -
Total	$ -	$ 1.150	$ 5.500	$ 10.170	$ 8.150	$ 2.080	$ -	$ 27.050

Current Planning Horizon - Transmission

	Prior Yrs	Yr. 1 2014/15	Yr. 2 2015/16	Yr. 3 2016/17	Yr. 4 2017/18	Yr. 5 2018/19	Yr. 6 + 2019/20	Total
CapEx	$ -	$ 2.250	$ 8.740	$ 13.480	$ 10.490	$ -	$ -	$ 34.960
OpEx	$ -	$ 0.030	$ 0.100	$ 0.160	$ 0.130	$ -	$ -	$ 0.420
Removal	$ -	$ 0.120	$ 0.430	$ 0.660	$ 0.510	$ -	$ -	$ 1.720
CIAC/Reimbursement	$ -	$ (1.100)	$ (2.760)	$ (3.880)	$ (3.320)	$ -	$ -	$(11.060)
Total	$ -	$ 1.300	$ 6.510	$ 10.420	$ 7.810	$ -	$ -	$ 26.040

1.14 Key Milestones

Milestone	**Target Date: (Month/Year)**
Partial Sanction Approval	June 2014
Preliminary Engineering Complete	December 2014
Project Sanction Approval & EPC Contract Award	December 2014
Permitting and Licensing Complete	July 2015
Complete Final Design	March 2016
Start of South Street Substation Construction (T,D & Sub)	August 2015
Submit Facility Ratings to ISO-NE	August 2017
Ready for Load (In Phases)	February 2018
Complete Cutovers from Existing South Street to New Substation	April 2019
Existing Building Removal	September 2019
Construction Complete	September 2019
Project Closure Report	March 2020

1.15 Resources, Operations and Procurement:

Resource Sourcing			
Engineering & Design Resources to be provided	☑ Internal		☑ Contractor
Construction/Implementation Resources to be provided	☑ Internal		☑ Contractor
Resource Delivery			
Availability of internal resources to deliver project:	○ Red	○ Amber	◉ Green

Availability of external resources to deliver project:	O Red	O Amber	⊙ Green
Operational Impact			
Outage impact on network system:	O Red	O Amber	⊙ Green
Procurement Impact			
Procurement impact on network system:	O Red	O Amber	⊙ Green

1.16 Key Issues (include mitigation of Red or Amber Resources):

1	Receipt of Permits (RIDEM, CRMC, EFSB)
2	Achieving a timely award to an MSA Contractor for Final Design
3	Timely customer payment of cost for [redacted]
4	Development and execution of 11 kV circuit cutover plan.

1.17 Climate Change:

Contribution to National Grid's 2050 80% emissions reduction target:	⊙ Neutral	O Positive	O Negative
Impact on adaptability of network for future climate change:	⊙ Neutral	O Positive	O Negative

1.18 List References:

1	Providence Area Long Term Distribution and Supply Study, May 2014
2	Providence Area Long Term Distribution and Supply Study Addendum, May 2014
3	Asset Condition Report – South Street Substation, January 2011
4	Conceptual Engineering Report - New South Street Substation, May 2014

2 Decisions

The US Sanctioning Committee (USSC) at a meeting held on June 25, 2014:

(a) APPROVED the investment of $27.400M and a tolerance of +/-10% for the purpose of Design Engineering, Permitting, Procurement of major Equipment and Preliminary Construction for the reasons stated above.

(b) NOTED the potential investment $57.35M with a tolerance of +50%/-25%, contingent upon submittal and approval of a Project Sanction paper following completion of Design Engineering and Permit approvals.

(c) NOTED that Nelson Antunes is the Project Manager and Sonny Anand has the approved financial delegation to undertake the activities stated in (a).

Signature.....Date....7/8/14....

Lee S. Eckert
US Chief Financial Officer
Chairman, US Sanctioning Committee

3 *Sanction Paper Detail*

Title:	South Street Substation	**Sanction Paper #:**	USSC-14-195
Project #:	C051212, C051213, C055584, C055585, C055586, C055623	**Sanction Type:**	Partial Sanction
Operating Company:	The Narragansett Electric Company	**Date of Request:**	6-25-14
Author:	Robert Galgano/Ryan Constable	**Sponsor:**	John Gavin, Acting Vice President Network Strategy
Utility Service:	Electricity T&D	**Project Manager:**	Nelson Antunes

3.1 Background

South Street substation is a major [redacted] supply substation serving downtown Providence, RI and the surrounding area. In combination with the Franklin Square [redacted] substation, the two substations serve a combined peak load of approximately 148 MVA. The South Street and Franklin Square substations supply the Providence Downtown network, one 23 kV substation, one 11 kV substation, eight (8) 4 kV distribution substations, [redacted]

Figures 4.2.1 through 4.2.3 and Figures 4.2.4 through 4.2.6 show one line electric diagrams and site pictures respectively of the South St Sub and surrounding facilities. Figures 4.2.4 through 4.2.6 show pictures of the existing South St Sub.

The Providence Area Long Term Supply and Distribution Study provides a high-level conceptual plan for the future development of the supply and distribution system in the City of Providence and adjacent communities. This study has identified the need for construction of a new [redacted] substation to replace the existing South Street substation as a result of asset condition issues described in Section 3.2.

In the Fall of 2013, National Grid was approached by a developer proposing a large scale project in the immediate area of the South St. Sub. As currently envisioned by the developer, the former South Street Power Station ("Dynamo House") and the adjacent [redacted]

[redacted] This redevelopment plan included three potential factors that could impact the Providence Study recommendations:

- the relocation of the existing South St. Sub (away from the Dynamo House);
- the rebuild of the existing transmission taps to South St. Sub in an underground configuration;
- the lease or transfer of a portion of the South St. Sub parcel for construction of a parking garage.

As described above, the rebuild or relocation of the South St. Sub on the existing site but away from the Dynamo House was recommended by the Providence Study.

[redacted]

3.2 Drivers

South Street Substation replacement is driven by asset condition concerns. These concerns are described in the Asset Condition Report for the South Street Substation which is summarized in the Providence Area Long Term Distribution and Supply Study.

The Asset Condition Report for the South Street substation describes issues for and recommends the replacement of a variety of station components. The building layout is such that it precludes the implementation of modern installation standards in order to replace original equipment. Additionally, spare parts for the protection components are

[1] Societal benefit represented informally by the [redacted] developer as job creation on the order or approximately 1,500 construction jobs and 540 permanent jobs with potential economic growth of $29 million in annual earnings and $64 million in statewide economic output.

unavailable and will be irreplaceable in the event of a failure. Lastly, maintenance work is time consuming and because of previously stated issues results in custom site-specific repairs.

Specific asset condition issues exist for the transformers, breakers, switches, feeder reactors, and the battery system. Transformer concerns include past bushing failures, top cover leaks, and partial internal discharge primarily associated with the #2216 11.5kV to 23kV unit. A number of 11.5kV breakers have reduced fault interrupting performance due to their outdated design. Also, replacement bushings, mechanisms and live parts for these breakers are no longer commercially available. Certain 11.5kV gang operated switches have operational issues. In some of the bays these switches are mounted in such a manner that replacement requires both the #1 and #2 11.5 kV buses to be taken out of service. The existing reactors are the limiting elements for some feeders and cannot be replaced with similar or larger units. Lastly, the battery system is approximately 18 years old and planned for replacement.

3.3 Project Description

The proposed project consists of constructing a new South Street substation on the existing South Street site, transferring all 11 kV circuits to the new substation, and



A new substation building will be constructed, two stories tall with a basement. The second floor of the substation building will house the 11 kV switchgear for the thirty two (32) 11 kV circuit positions. The control rooms for relay protection and controls are also on the second floor. The first floor will house feeder reactors and feeder disconnect switches. The bottom floor is a basement for cable routing. The substation also includes three (3) 11 kV capacitor banks.

Following the cutover of all 11 kV circuits to the new substation, the existing South Street 11 kV substation will be de-energized. The South Street 11 kV substation building will be removed following the cutover completion.

[redacted]

All Transmission investments are expected to be Non-PTF (Non-Pool Transmission Facilities).

3.4 Benefits Summary

The recommended alternative addresses the indoor substation asset condition issues with the existing South Street substation.

3.5 Business and Customer Issues

The following business issues are associated with the recommended alternative solution:

- The proposed investment is included in NG's current Business Plan.
- NEC has concluded the existing substation site is suitable for the new South Street substation.
- NEC has concluded there is adequate land available on the existing South Street substation site to construct the new substation, and to also lease a portion of the site to the developer for construction of a parking garage.

3.6 Alternatives

The Providence Study notes the importance of the South St. Sub location and the need to retain the 11.5kV supplied downtown network. With this basis and the need to address the asset conditions, the study considered a variety of station rebuild configurations. The recommended plan is the lowest cost station rebuild configuration then modified by the Study Addendum.

[redacted]

3.7 Safety, Environmental and Project Planning Issues

A formal and detailed Cutover Plan will be developed for the transfer of all existing 11 kV circuits to the new substation. This Plan will be developed during the Final Engineering and Design Phase.

Other required consents would include:

- Rhode Island Department of Environmental Management (RIDEM) approval of the project
- Rhode Island Coastal Management Resources Council (CMRC) approval of the storm water discharge from the site.
- Energy Facilities Siting Board (EFSB) approval of the project

There are environmental impacts associated with the construction of the substation. Specifically, the site abuts the Providence River. Storm water discharge will need to be in compliance with CMRC requirements. A plan will be developed to manage and improve the quality of the rain water runoff from the station's impervious surfaces, including the substation building roof and paved areas.

The site is located in downtown Providence, in the heart of the city's Jewelry District. Appropriate substation screening for an urban site will be provided. [redacted]

Environmental Permitting for the National Grid South Street substation project will be coordinated with the developer's environmental permitting for the [redacted] project.

3.8 Execution Risk Appraisal

Number	Detailed Description of Risk / Opportunity	Probability	Impact		Score		Strategy	Pre-Trigger Mitigation Plan	Residual Risk	Post Trigger Mitigation Plan
			Cost	Schedule	Cost	Schedule				
1	Approval of RIDEM Permit	2	2	3	[redacted]	[redacted]	Mitigate	Design facilities to avoid/minimize and construct utilizing accepted practices.	Design modifications may be required	Keep design group coordinated for a review of design options
2	CRMC Approval	2	2	2	[redacted]	[redacted]	Mitigate	Design facilities to incorporate CRMC stormwater requirements	Design modifications may be required	Keep design group coordinated for a review of design options.
3	Obtaining the required scheduled outage	2	2	2	[redacted]	[redacted]	Accept	Develop plan and increase communication between as scheduled outage approaches.	Construction delays may result from outage postponement.	Continue frequent communication until outage work is concluded.

Total Risk $: ***$270,000***
Total Risk Wks: ***4***

DIV 4-4 Attachment: Page 280 of 656

REDACTED

3.9 Permitting

Permit Name	Probability Required (Certain/ Likely/Unlikely)	Duration To Acquire Permit	Status (Complete/ In Progress Not Applied For)	Estimated Completion Date
CMRC	Certain	12 mos.	Not Applied For	6/15
RIDEM	Certain	12 mos.	Not Applied For	6/15
EFSB	Likely	9 mos.	Not Applied For	3/15
USACE	Possible	6 mos.	Not Applied For	6/15

3.10 Investment Recovery

3.10.1 Investment Recovery and Regulatory Implications

Based on current schedules the substation will enter service in FY'18 and will be included in each Fiscal year's Annual ISR Filing until that time.

3.10.2 Customer Impact

This Project results in an indicative first full year revenue requirement when the asset is placed in service equal to $9.94 M. This is indicative only. The actual revenue requirement will differ, depending upon the timing of the next rate case and/or the timing of the next filing in which the Project is included in the rate case.

3.10.3 CIAC / Reimbursement

[redacted]

$M	Prior Yrs	Yr. 1 2014/2015	Yr. 2 2015/2016	Yr. 3 2016/2017	Yr. 4 2017/2018	Yr. 5 0	Yr. 6 + 0	Total
CIAC/Reimbursement	$ -	$ 1.10	$ 2.77	$ 3.87	$ 3.32	$ -	$ -	$ 11.06

3.11 Financial Impact to National Grid

3.11.1 Cost Summary Table

Project Number	Project Title	Project Estimate Level (%)	Spend ($M)	Prior Yrs	Current Planning Horizon Yr. 1 2014/15	Yr. 2 2015/16	Yr. 3 2016/17	Yr. 4 2017/18	Total
C051212	South St repl indoor subst D-SUB	+50%/-25%	CapEx	-	0.830	4.130	6.600	4.950	16.510
			OpEx	-	0.010	0.050	0.070	0.050	0.180
			Removal	-	0.090	0.430	0.680	0.510	1.710
			Total	-	0.930	4.610	7.350	5.510	18.400
C051213	South St repl indoor subst D-LINE	+50%/-25%	CapEx	-	0.080	0.410	0.650	0.490	1.630
			OpEx	-	0.010	0.040	0.070	0.050	0.170
			Removal	-	-	0.010	0.020	0.020	0.050
			Total	-	0.090	0.460	0.740	0.560	1.850
C055584	South Street Substation Rebuild	+50%/-25%	CapEx	-	1.240	6.200	9.920	7.440	24.800
			OpEx	-	0.010	0.060	0.100	0.070	0.240
			Removal	-	0.050	0.250	0.400	0.300	1.000
			Total	-	1.300	6.510	10.420	7.810	26.040
C055585	T1/T2/T3 Circuits Rebuild	+50%/-25%	CapEx	-	0.920	2.310	3.230	2.770	9.230
			OpEx	-	0.010	0.020	0.030	0.030	0.090
			Removal	-	0.070	0.180	0.250	0.210	0.710
			Total	-	1.000	2.510	3.510	3.010	10.030
C055586	T1/T2/T3 Circuits Rebuild (Franklin Sq)	+50%/-25%	CapEx	-	0.090	0.230	0.330	0.280	0.930
			OpEx	-	0.010	0.020	0.030	0.030	0.090
			Removal	-	-	-	0.010	-	0.010
			Total	-	0.100	0.250	0.370	0.310	1.030
C055623	South St Sub 11kV Removal	+50%/-25%	CapEx	-	0.020	0.020	0.020	0.020	0.100
			OpEx	-	0.020	0.020	0.020	0.020	0.100
			Removal	-	0.090	0.390	2.040	2.040	6.600
			Total	-	0.130	0.430	2.080	2.080	6.800
Total Project Sanction			CapEx	-	3.180	13.300	20.750	15.950	53.200
			OpEx	-	0.070	0.210	0.320	0.250	0.870
			Removal	-	0.300	1.260	3.400	3.080	10.080
			Total	-	3.550	14.770	24.470	19.280	64.150

3.11.2 Project Budget Summary Table

Project Costs per Business Plan - Transmission

		Yr. 1	Yr. 2	Yr. 3	Yr. 4	Yr. 5	Yr. 6 +	
Spend ($M)	Prior Yrs	2014/15	2015/16	2016/17	2017/18	2018/19	2019/20	Total
CapEx		$ -	$ -	$ -	$ -	$ -		$ -
OpEx								
Removal								
Total Cost in Business Plan		$ -	$ -	$ -	$ -	$ -	$ -	$ -

Variance - Transmission (Business Plan - Project Costs)

	Prior Yrs	Yr. 1	Yr. 2	Yr. 3	Yr. 4	Yr. 5	Yr. 6 +	
Spend ($M)	(Actual)	2014/15	2015/16	2016/17	2017/18	2018/19	2019/20	Total
CapEx	$ -	$ (2.250)	$ (8.740)	$ (13.480)	$ (10.490)	$ -	$ -	$ (34.960)
OpEx	$ -	$ (0.030)	$ (0.100)	$ (0.160)	$ (0.130)	$ -	$ -	$ (0.420)
Removal	$ -	$ (0.120)	$ (0.430)	$ (0.660)	$ (0.510)	$ -	$ -	$ (1.720)
Total Cost in Business Plan		$ (2.400)	$ (9.270)	$ (14.300)	$ (11.130)	$ -	$ -	$ (37.100)

Project Costs per Business Plan - Distribution

		Yr. 1	Yr. 2	Yr. 3	Yr. 4	Yr. 5	Yr. 6 +	
Spend ($M)	Prior Yrs	2014/15	2015/16	2016/17	2017/18	2018/19	2019/20	Total
CapEx		$ 0.200	$ 2.000	$ 17.000	$ 8.900	$ 5.900	$ -	$ 34.000
OpEx		$ 0.018	$ 0.120	$ 0.750	$ 0.435	$ 0.177	$ -	$ 1.500
Removal		$ 0.014	$ 0.090	$ 0.540	$ 0.318	$ 0.118	$ -	$ 1.080
Total Cost in Business Plan		$ 0.232	$ 2.210	$ 18.290	$ 9.653	$ 6.195	$ -	$ 36.580

Variance - Distribution (Business Plan - Project Costs)

	Prior Yrs	Yr. 1	Yr. 2	Yr. 3	Yr. 4	Yr. 5	Yr. 6 +	
Spend ($M)	(Actual)	2014/15	2015/16	2016/17	2017/18	2018/19	2019/20	Total
CapEx	$ -	$ (0.730)	$ (2.560)	$ 9.730	$ 3.440	$ 5.880	$ -	$ 15.760
OpEx	$ -	$ (0.022)	$ 0.010	$ 0.590	$ 0.315	$ 0.157	$ -	$ 1.050
Removal	$ -	$ (0.166)	$ (0.740)	$ (2.200)	$ (2.252)	$ (1.922)	$ -	$ (7.280)
Total Cost in Business Plan		$ (0.918)	$ (3.290)	$ 8.120	$ 1.503	$ 4.115	$ -	$ 9.530

3.11.3 Cost Assumptions

3.11.4 Net Present Value / Cost Benefit Analysis – Not Financially Driven

Economic measures		5yr	10yr	20yr	Comment
NPV	@ Discount rate				
IRR					
MIRR					
Simple Payback in Years					
Total O&M					
Total Capital Investment					
Total Savings					

3.11.5 Additional Impacts - There are no additional impacts to be considered.

3.12 Statements of Support

3.12.1 Supporters

Function	Area	Individual	Responsibility
Investment Planner	Transmission NE	Michelle Park	Endorses relative to 5-year business plan or emergent work.
Investment Planner	Dist. NE	Glen Diconza	Endorses relative to 5-year business plan or emergent work.
Resource Planning	Distribution - New England	Jim Patterson	Endorses Resources, cost estimate, schedule, and Portfolio Alignment
Resource Planning	Trans. Line & Substation - New England	Mark Phillips	Endorses Resources, cost estimate, schedule, and Portfolio Alignment
Engineering & Design	Transmission Planning Projects	Carol Sedewitz	Endorses scope, design, conformance with design standards
Engineering & Design	Substations	Sue Martuscello	Endorses scope, design, conformance with design standards
Engineering & Design	Transmission & Sub-T Line	Mark Browne	Endorses scope, design, conformance with design standards
Engineering & Design	Protection & Telecom	Leonard Swanson	Endorses scope, design, conformance with design standards
Engineering & Design	Dist. Line and Sub. and Sub.-T Planning	Alan Labarre	Endorses scope, design, conformance with design standards
Project Management	T&D Line NE	Timothy Moore	Endorses resource, cost estimate and schedule

3.12.2 Reviewers

Reviewer List	Name
Finance	Keith Fowler
Regulatory	Peter Zschokke
Jurisdictional Delegate	Jennifer Grimsley
Procurement	Art Curran
New England Regional CC	Michael Gallagher
NE Transmission Regional CC	Will Houston

4 Appendices

4.1 Sanction Request Breakdown by Project (Partial Sanction only)

$M	C051212	C051213	C055584	C055585	C055586	C055623	Total
CapEx	$6.100	$0.200	$13.700	$3.000	$0.300	$0.050	$23.350
OpEx	$0.020	$0.000	$0.050	$0.000	$0.000	$0.050	$0.120
Removal	$0.020	$0.000	$0.050	$0.000	$0.000	$0.200	$0.270
Total	$6.140	$0.200	$13.800	$3.000	$0.300	$0.300	$23.740

4.2 Other Appendices [When inserting pictures/drawings use compress feature]

nationalgrid

4.2.1 Existing One Line Diagram: South Street, Providence Area 11 kV

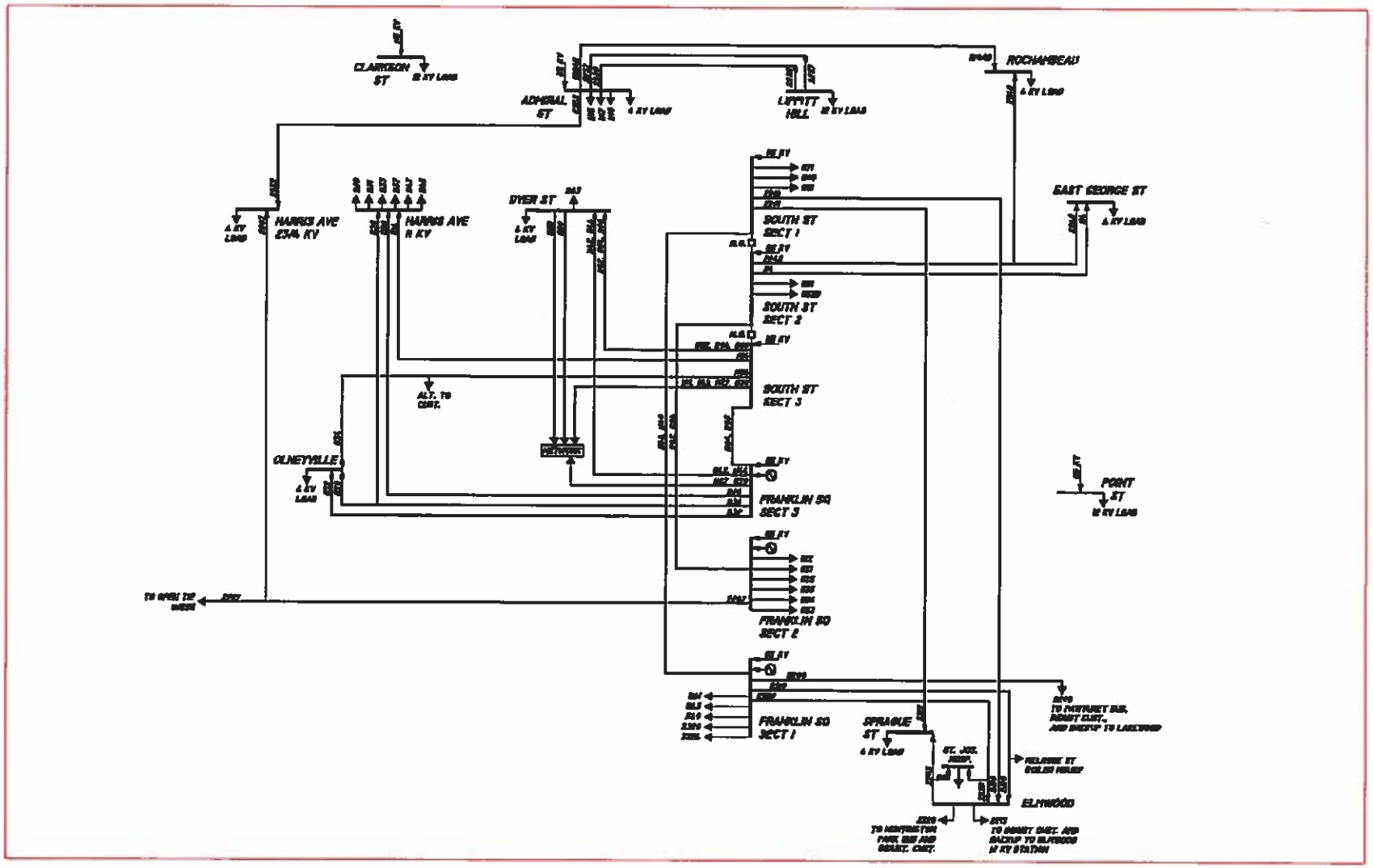

DIV 4-4 Attachment: Page 287 of 656

REDACTED



REDACTED

DIV 4-4 Attachment: Page 288 of 656

nationalgrid

4.2.3 Existing One Line Diagram: South Street, 11 kV Section 1 of 3 (Typical of 3)

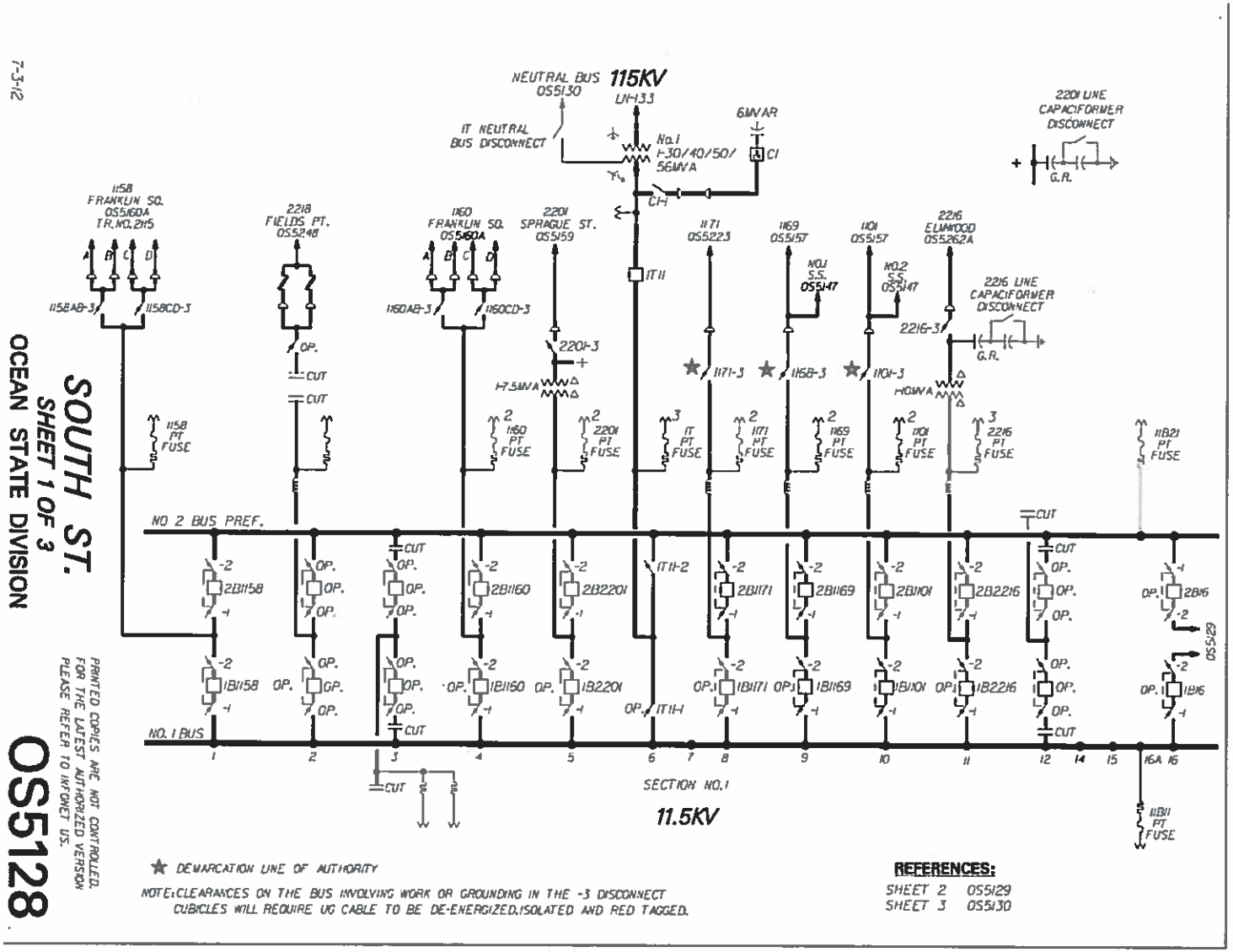

REDACTED

nationalgrid

4.2.4 Existing South Street Substation Site



REDACTED

DIV 4-4 Attachment: Page 290 of 656

nationalgrid

4.2.5 Existing South Street Substation Building



REDACTED

DIV 4-4 Attachment: Page 291 of 656

nationalgrid

4.2.6 Existing South Street Substation Indoor 11 kV



DIV 4-4 Attachment: Page 292 of 656

REDACTED

4.2.7 Proposed South Street Substation Layout

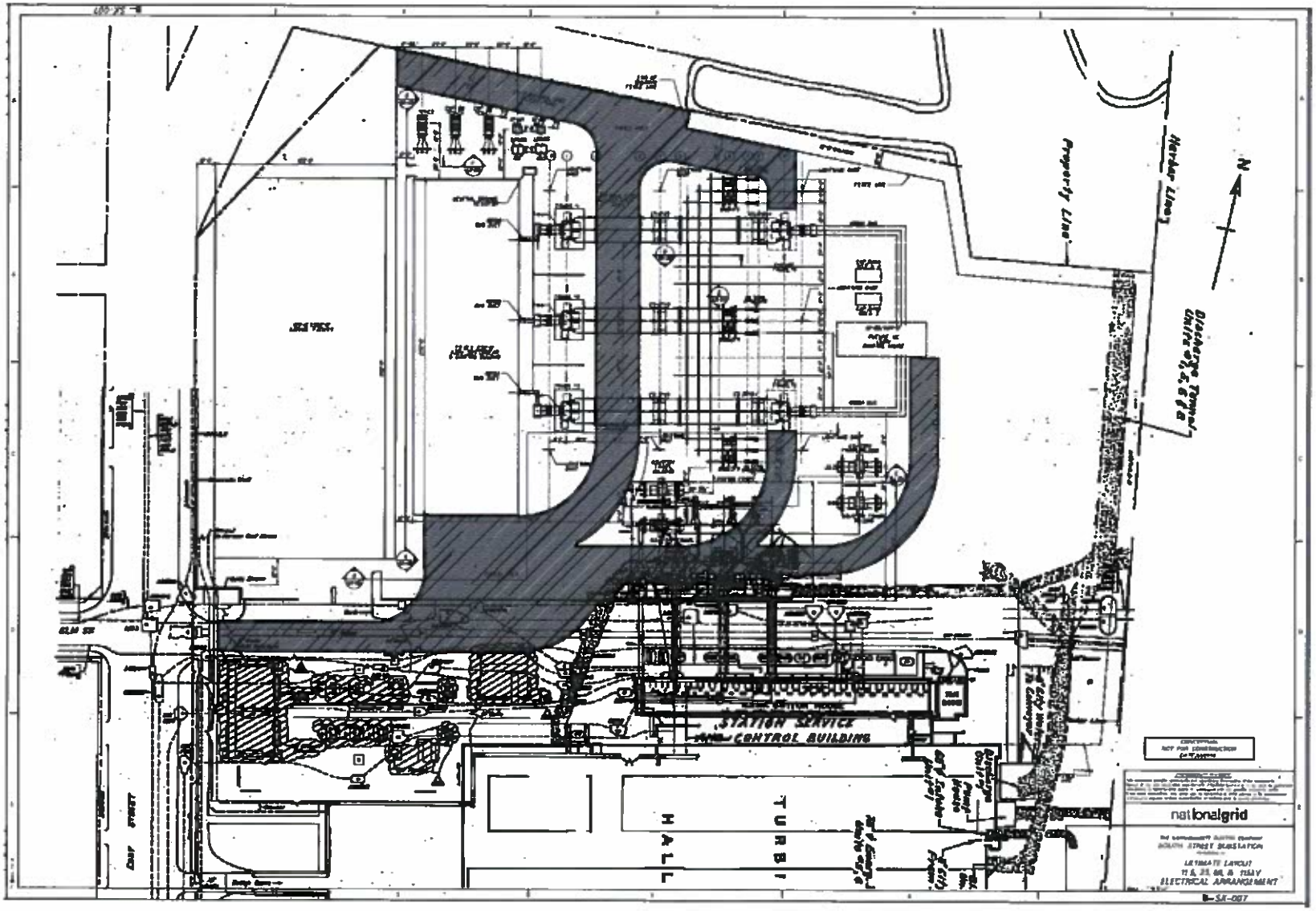

REDACTED

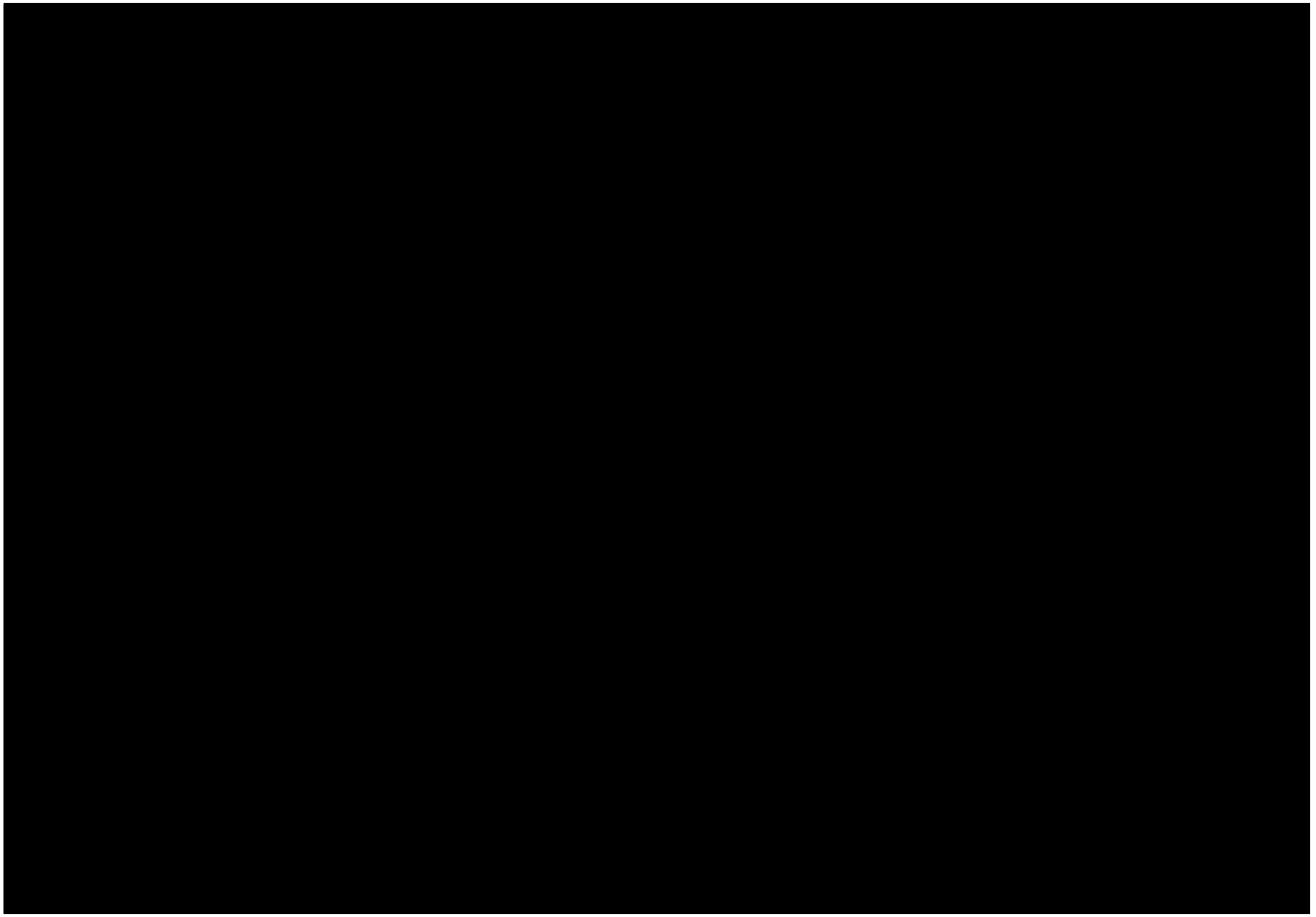

DIV 4-4 Attachment: Page 294 of 656

REDACTED

nationalgrid

4.2.9 Proposed South Street Substation 115 kV Supply Cable Routes

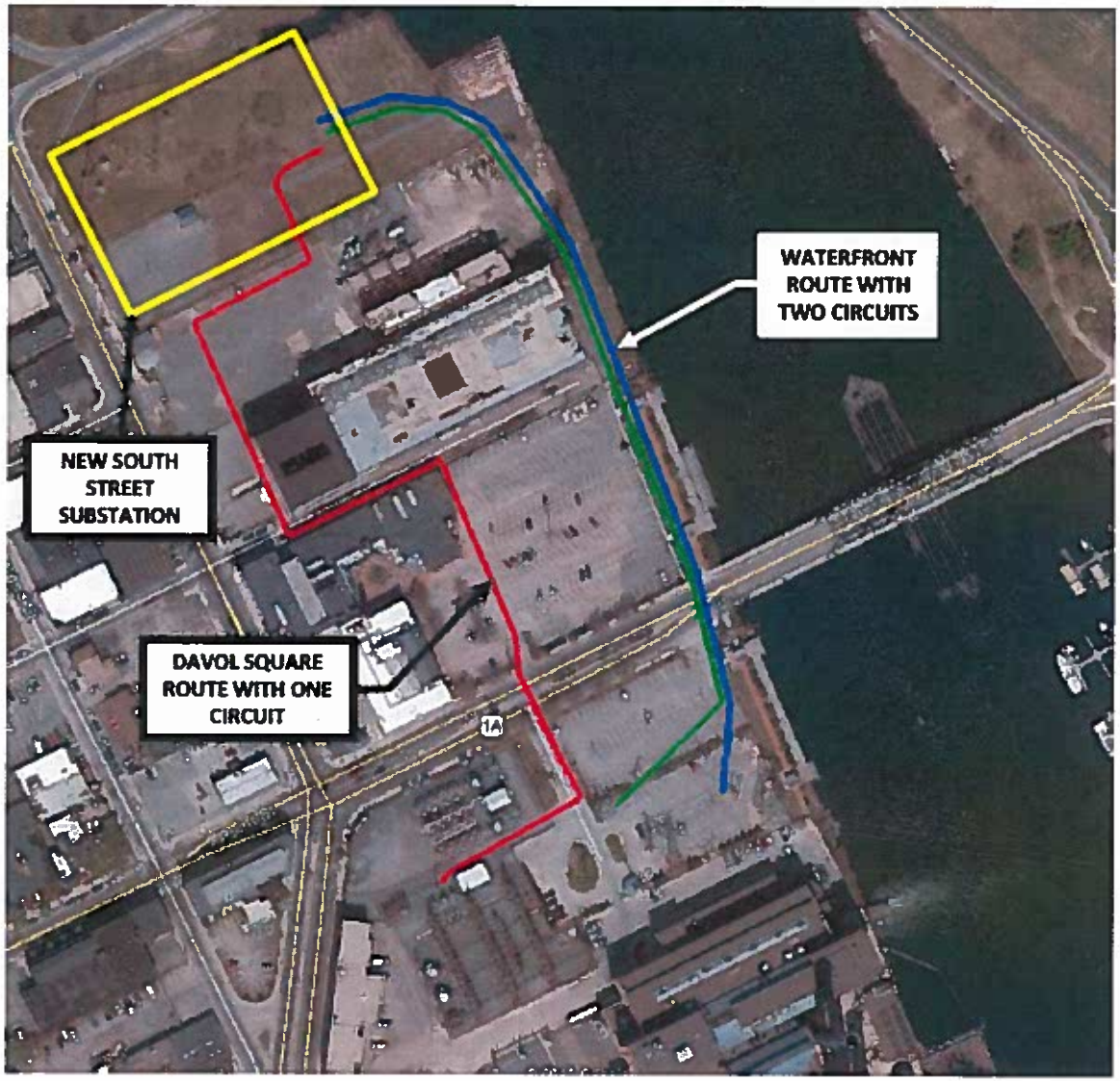

DIV 4-4 Attachment: Page 295 of 656

REDACTED

nationalgrid

4.2.10 Proposed South Street Substation One Line Diagram, 11 kV Section 1 of 3 (Typical of 3)

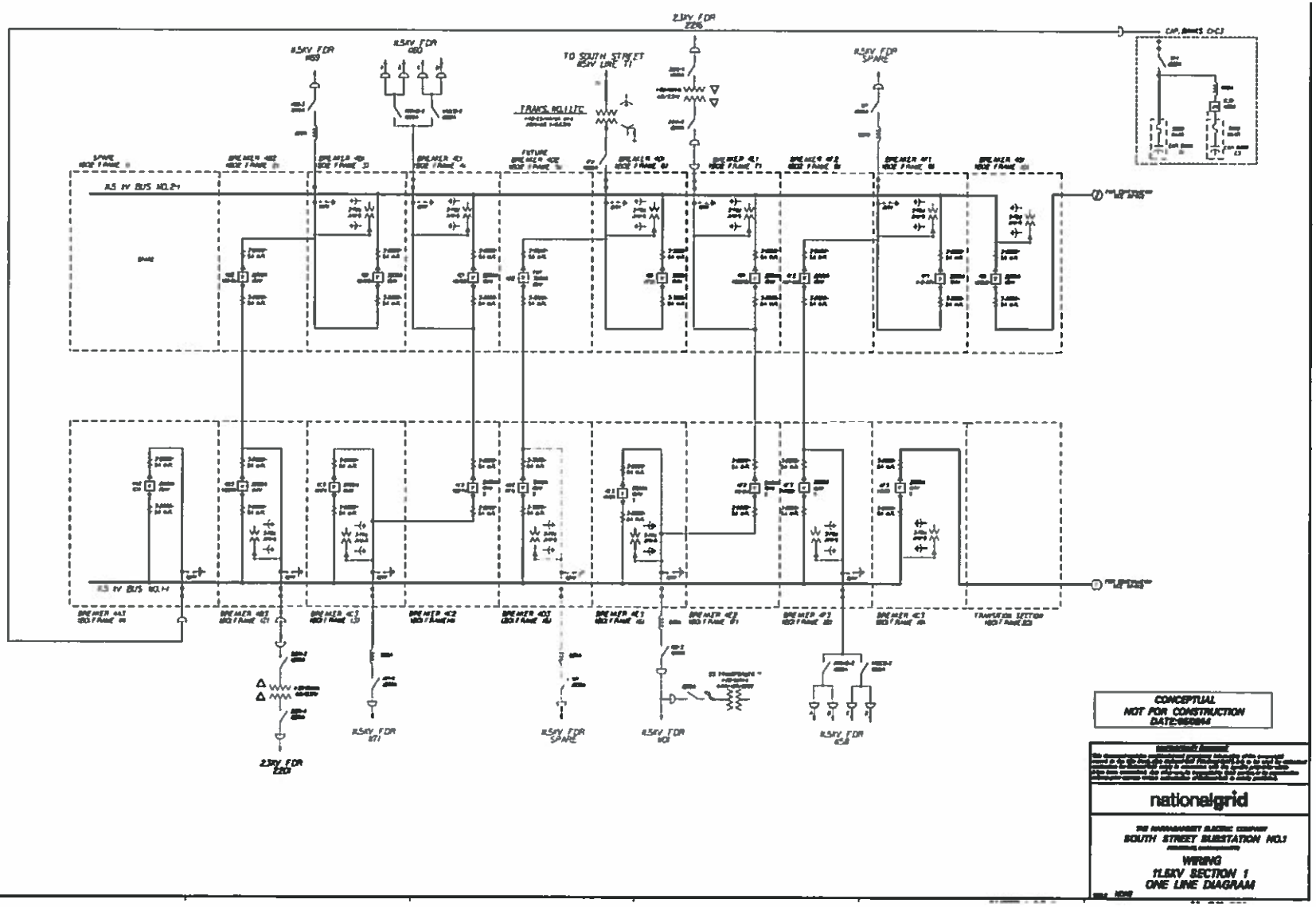

REDACTED

nationalgrid

4.2.11 Proposed South Street Substation 11 kV Building – Elevation View

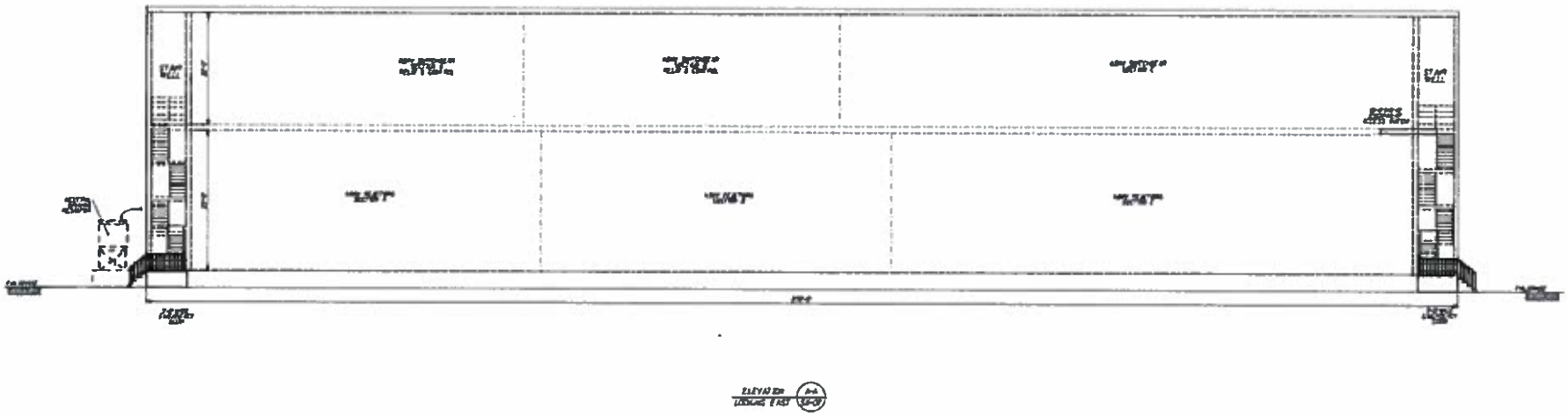

DIV 4-4 Attachment: Page 297 of 656

REDACTED

nationalgrid

4.2.12 Proposed South Street Substation 11 kV Reactor Room Layout, 1ST Floor

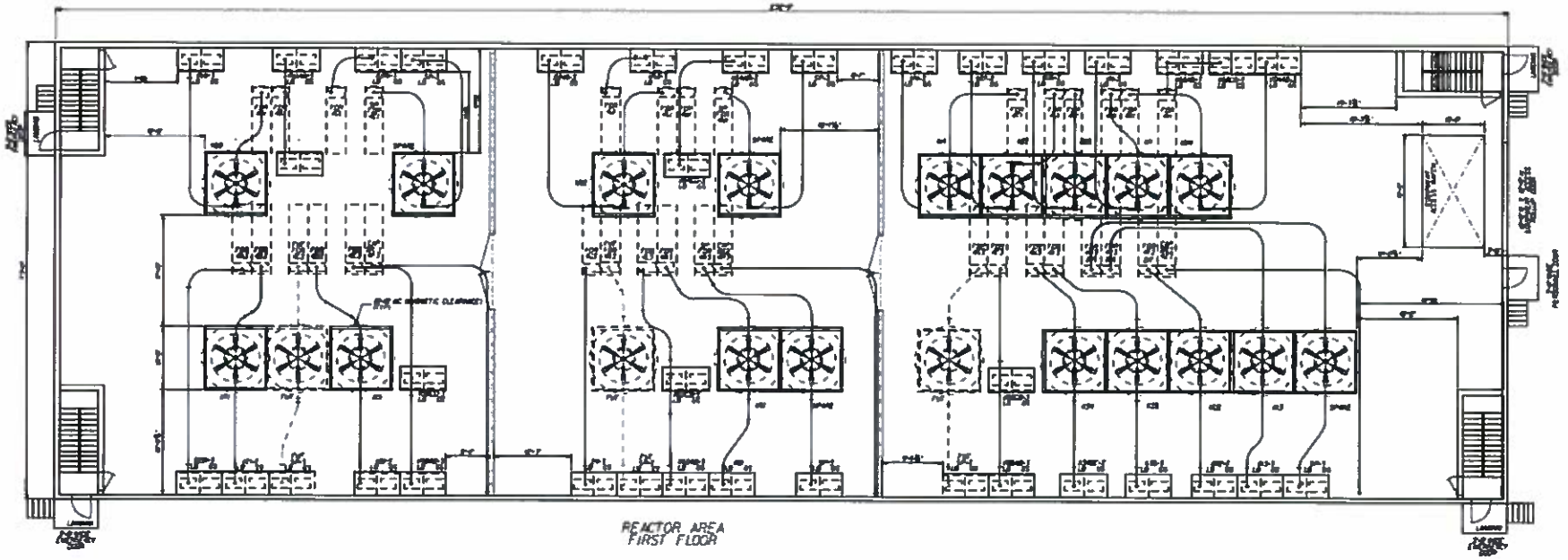

REDACTED

4.2.13 Proposed South Street 11 KV Substation Switchgear and Control Room Layout, 2nd Floor

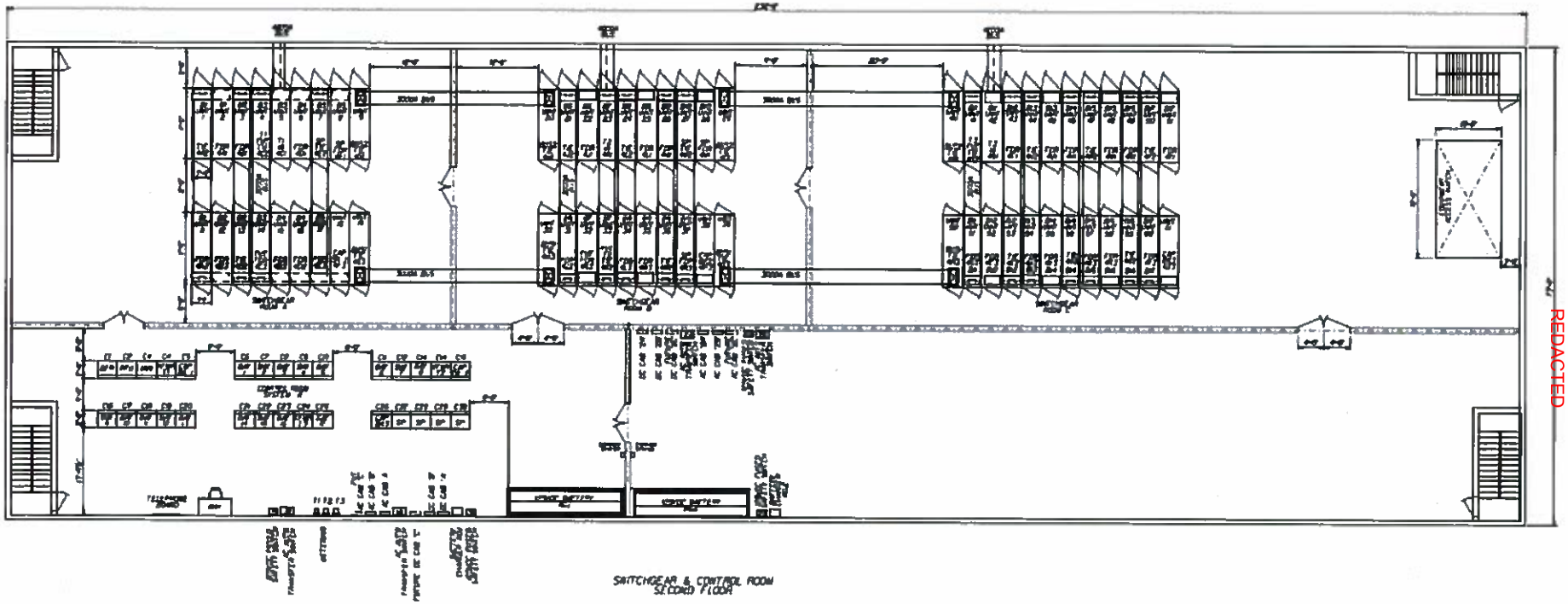

REDACTED

4.3 NPV Summary (if applicable) - Not Applicable

4.4 Customer Outreach Plan (if applicable)

Customer outreach has begun and is ongoing for the South Street project. A working relationship has been established between the National Grid project team for [redacted] Environmental permitting efforts are being coordinated.

Additional customer outreach is planned for other stakeholders, including other abutters and City officials.

REDACTED

Short Form Sanction Paper

nationalgrid

Title:	Lafayette Transformer Replacement	**Sanction Paper #:**	USSC-14-223V3
Project #:	C051824	**Sanction Type:**	Sanction
Operating Company:	The Narragansett Electric Co.	**Date of Request:**	September 26, 2017
Author:	Kathleen Hurley	**Sponsor:**	Carol Sedewitz, VP of Electric Asset Management
Utility Service:	Electricity T&D	**Project Manager:**	Kathleen Hurley

1 Executive Summary

1.1 Sanctioning Summary

This paper requests a project sanction of C051824 in the amount $2.703M with a tolerance of +/- 10% for the purposes of full implementation.

This sanction amount is $2.703M broken down into:

$2.582M Capex
$0.000M Opex
$0.121M Removal

1.2 Project Summary

This project will replace the existing No. 1 transformer in North Kingstown RI, the motor operated disconnect switches will be replaced and the associated wood pole box structure will be replaced with the company's standard aluminum pole box structure. Lastly, the Energy Management System (EMS) will be expanded to provide status, control and monitoring. The transformer and associated equipment is being replaced due to poor asset condition issues.

2 Project Detail

Lafayette Substation #30 is located in North Kingstown, Rhode Island. Presently, there are two feeders out of this substation serving approximately 3,600 customers. The existing No.1 transformer has condition issues. Namely recent tests indicate that the unit is wet and contaminated. The Furan Analysis, which detects cellulose by-products in the oil, revealed that the insulation system is deteriorated and near its end of useful life.

REDACTED

In addition, the motor operated air break switches, No's. 301 and 302 are in need of replacement. In 2010, the live parts of the motor operated air-break switches were replaced with load break components due to a switch failure.

2.1 Background

Presently, there are two feeders out of this substation serving approximately 3,600 customers. The existing No.1 transformer is in condition. Recent tests indicate that the unit insulation is wet and contaminated. The Furan Analysis, which detects cellulose by-products in the oil, revealed that the insulation system is deteriorated and near its end of useful life. The transformer is 56 years old, and the unit has been on the Transformer Replacement and Watch Lists. Thus the transformer is being proactively replaced due to the risks associated with it having a high likelihood of failure. In addition, the motor operated air break switches, No's. 301 and 302 are in need of replacement. In 2010, the live parts of the motor operated air-break switches were replaced with load break components due to a switch failure. Since then, Substation Operations and Maintenance (O&M) have been called several times to repair the misalignment of the blades resulting in the switches not opening or closing fully. In February 2014, the No. 301 switch failed to open to isolate a fault and consequently the 302 switch closed in on the fault causing a station outage that impacted 4,809 customers. It is presumed that the operating mechanisms do not appropriately match-up with the larger load break components.

2.2 Drivers

The primary driver for this project is poor asset condition. The No. 1 transformer at Lafayette #30 Substation is in poor condition due to a wet, contaminated and deteriorated insulation system. Through this period, the company is taking a proactive approach to address an existing condition issue in an effort to maintain reliability and improve the Company's infrastructure. This project is part of the Transformer Substation Strategy, and is in-line with the transformer asset replacements.

2.3 Project Description

Transformer No. 1 will be replaced with a standard unit rated transformer. The No.1 and 2 transformer primary 34.5 kV air break switches will be replaced with 34.5 kV reclosers, and the existing fuses will be replaced with 34.5 kV disconnects. The four (4) pole wooden box structure will be replaced with a four (4) pole aluminum box structure due to the poor condition of the wooden poles. The two 34.5 kV motor operated load break switches, equipment position No's 301 and 302, will be replaced with two new 34.5 kV motor operated load break switches. This will include the motor operator, outdoor yard AC panel, and the transfer scheme control cabinet. One 34.5 kV gang-operated manual disconnect switch will be installed.

The relay protection for the new transformer and recloser will be upgraded on transformer No.1, and the relay recloser protection scheme will be upgraded on transformer No.2. The existing Remote Terminal Unit (RTU) will expand EMS to provide remote status, control and monitoring of all switching devices, transformers,

REDACTED

voltage regulation and battery systems. Alarming will include for low oil in the transformer; and for system trouble with the transformer, circuit breaker, relay and battery. Monitoring will include voltage and current for all three phases and neutral, MW, MVAR, and Mega Volt Amp (MVA). Control will include trip and close on all switching devices; reclose on/off on circuit breakers; ground relay control on feeders for switching, and control of voltage regulation.

In order to perform the necessary work, Feeders 30F1 and 30F2, and the 34.5 kV bus will require an outage. It is suggested that this work be performed during off peak loading, and will be further evaluated by the regional control center.

2.4 Benefits

This project will maintain reliability in the North Kingstown area by eliminating the poor asset condition issues associated with the deteriorated and contaminated transformer insulation system and the miss-alignment issues with the motor operated load break switches at the Lafayette Substation. Upgrading the capacity of the No. 1 transformer will improve capacity requirements and allow for future growth in the area. By expanding Energy Management System (EMS), this will improve remote access and control to the Regional Control Center and improve incident response recovery. EMS Expansion is in line with the Remote Terminal Unit (RTU) Installation and EMS Expansion Strategy.

2.5 Business & Customer Issues

There are no significant business issues beyond what has been described elsewhere in this paper.

2.6 Alternatives

Alternative 1: Replace T1, Regulators and Implement Breaker and a Half Design
This option recommends the replacement of the existing No.1 transformer to a larger unit, replacement of the No. 1 and 2 primary air-break switches and fuses with 34.5 kV reclosers and disconnects, and the re-configuration of the structure to a breaker and a half design.

This alternative is not recommended because based upon the rating of the transformers, a breaker and a half design is not standard. The station is not large enough to accommodate this alternative, and the 34.5 kV structure would require re-alignment and must be moved.

2.7 Investment Recovery

Investment recovery will be through standard rate recovery mechanisms.

REDACTED

2.7.1 Customer Impact

This project results in an indicative first full year revenue requirement when the asset is placed in service equal to approximately $0.450M. This is indicative only. The actual revenue requirement may differ, depending upon the timing of the next rate case and/or the timing of the next filing in which the project is included in rate base.

3 Related Projects, Scoring, Budgets

3.1 Summary of Projects

Project Number	Project Type (Elec only)	Project Title	Estimate Amount ($M)
C051824	D-Sub	Lafayette Transformer Replacement	2.703
		Total	2.703

3.2 Associated Projects

N/A

3.3 Prior Sanctioning History

Describe previous sanctions for the projects included in the scope of this paper (Newest to Oldest).

Date	Governance Body	Sanctioned Amount	Potential Project Investment	Paper Title	Sanction Type	Tolerance
1/5/16	USSC	$1.950M	$2.348M	Lafayette Transformer Replacement	Partial	+/- 25%
9/2/14	USSC	$0.514M	$1.762M	Lafayette Transformer Replacement	Partial	+50/-25%
9/26/13	Power Plant	$0.311M		Lafayette Sub Transformer Replacement	Partial	N/A
2/6/13	DCIG	N/A	N/A	Distribution Substation Transformer Strategy – DCIG1009S183	Strategy	N/A

REDACTED

10/1/10	DCIG	N/A	N/A	Substation RTU Installation Strategy – DCIG1010S317	Strategy	N/A

3.4 Category

Category	Reference to Mandate, Policy, NPV, or Other
○ Mandatory	Transformer Asset Replacement Program EMS Expansion/RTU Installation Program
◉ Policy- Driven	
○ Justified NPV	
○ Other	

3.5 Asset Management Risk Score

Asset Management Risk Score: __35_

Primary Risk Score Driver: (Policy Driven Projects Only)

◉ Reliability ○ Environment ○ Health & Safety ○ Not Policy Driven

3.6 Complexity Level

○ High Complexity ◉ Medium Complexity ○ Low Complexity ○ N/A

Complexity Score: __19__

3.7 Next Planned Sanction Review

Date (Month/Year)	Purpose of Sanction Review
July 2019	Closure Paper

4 Financial

4.1 Business Plan

Business Plan Name & Period	Project included in approved Business Plan?	Over / Under Business Plan	Project Cost relative to approved Business Plan ($)
FY18-22 NE Distribution and Transmission Capital Plan	⊙ Yes ○ No	⊙ Over ○ Under ○ NA	0.168M

4.1.1 If cost > approved Business Plan how will this be funded?

Re-allocation of funds within the portfolio has been managed and approved by Resource Planning to meet jurisdictional budgetary, statutory and regulatory requirements.

4.2 CIAC / Reimbursement

N/A

4.3 Cost Summary Table

Project Number	Project Title	Project Estimate Level (%)	Spend	Prior Yrs	Current Planning Horizon ($M) Yr. 1 2017/18	Yr. 2 2018/19	Yr. 3 2019/20	Yr. 4 2020/21	Yr. 5 2021/22	Yr. 6 + 2022/23	Total
C051824	Lafayette Transformer Replacement	Est Lvl (+/- 10%)	CapEx	0.942	0.329	1.143	0.168	-	-	-	2.582
			OpEx	-	-	-	-	-	-	-	-
			Removal	-	0.022	0.086	0.013	-	-	-	0.121
			Total	0.942	0.351	1.229	0.181	-	-	-	2.703

Total Project Sanction	CapEx	0.942	0.329	1.143	0.168	-	-	-	2.582
	OpEx	-	-	-	-	-	-	-	-
	Removal	-	0.022	0.086	0.013	-	-	-	0.121
	Total	0.942	0.351	1.229	0.181	-	-	-	2.703

4.4 Project Budget Summary Table

Project Costs Per Business Plan

$M	Prior Yrs (Actual)	Current Planning Horizon ($M) Yr. 1 2017/18	Yr. 2 2018/19	Yr. 3 2019/20	Yr. 4 2020/21	Yr. 5 2021/22	Yr. 6 + 2022/23	Total
CapEx	0.942	0.527	0.947	0.000	0.000	0.000	0.000	2.416
OpEx	0.000	0.011	0.019	0.000	0.000	0.000	0.000	0.030
Removal	0.000	0.032	0.057	0.000	0.000	0.000	0.000	0.089
Total Cost in Bus. Plan	0.942	0.570	1.023	0.000	0.000	0.000	0.000	2.535

Variance (Business Plan-Project Estimate)

$M	Prior Yrs (Actual)	Current Planning Horizon ($M) Yr. 1 2017/18	Yr. 2 2018/19	Yr. 3 2019/20	Yr. 4 2020/21	Yr. 5 2021/22	Yr. 6 + 2022/23	Total
CapEx	0.000	0.198	(0.196)	(0.168)	0.000	0.000	0.000	(0.166)
OpEx	0.000	0.011	0.019	0.000	0.000	0.000	0.000	0.030
Removal	0.000	0.010	(0.029)	(0.013)	0.000	0.000	0.000	(0.032)
Total Cost in Bus. Plan	0.000	0.219	(0.206)	(0.181)	0.000	0.000	0.000	(0.168)

5 *Key Milestones*

Milestone	Target Date: (Month/Year)
Partial Sanction	09/2014
Preliminary Design Complete	08/2015
Substation Engineering Design Complete – EDC	01/2017
Project Estimate	08/2017
Project Sanction	09/2017
Site Prep- Mobilize	03/2018
Construction Start & First Outage	04/2018
Phase 2 Outage	09/2018
RFI	01/2019
Construction Complete – CC	02/2019
Project Closure Report	07/2019

REDACTED

6 *Statements of Support*

6.1.1 Supporters

The supporters listed have aligned their part of the business to support the project.

Role	Individual	Responsibilities
Investment Planning	DiConza, Glen	Endorses relative to 5-year business plan or emergent work
Resource Planning	Phillips, Mark	Endorses construction resources, cost estimate, schedule, and portfolio alignment
Asset Management / Planning	Constable, Ryan	Endorses scope, estimate, and schedule with the company's goals, strategies, and objectives
Engineering and Design	Martuscello, Suzan E.	Endorses scope, design, conformance with design standards
Project Management	Vacher, Shaun	Endorses resources, cost estimate, schedule
Electric Project Estimation	Duffy, John	Endorses Cost Estimate

6.1.2 Reviewers

The reviewers have provided feedback on the content/language of the paper.

Reviewer List	Individual
Finance	Collison, Mark
Regulatory	Gurry, Renee
Jurisdictional Delegate(s)	Anand, Sonny
FERC	Michael Artuso
Procurement	Curran, Art
Control Centers (CC)	Gallagher, Michael

6.1.3 List References

N/A

REDACTED

7 Decisions

I:

(a) APPROVE this paper and the investment of $2.703M and a tolerance of +/-10%

(b) NOTE that Kathleen Hurley is the Project Manager and has the approved financial delegation.

Signature.....Date.....

Christopher Kelly

Senior Vice President, Electric Process and Engineering

REDACTED

8 Other Appendices

N/A

8.1 Sanction Request Breakdown by Project

N/A

Short Form Sanction Paper- Instructions

nationalgrid

Title:	Lafayette Transformer Replacement	**Sanction Paper #:**	USSC-14-223V2
Project #:	C051824	**Sanction Type:**	Partial Sanction
Operating Company:	The Narragansett Electric Co.	**Date of Request:**	January 5, 2016
Author:	Bradley Wheeler	**Sponsor:**	John Gavin, Vice President Electric Asset Management
Utility Service:	Electricity T&D	**Project Manager:**	Bradley Wheeler

1 Executive Summary

1.1 Sanctioning Summary

This paper requests partial sanction of C051824 in the amount $1.950M with a tolerance of +/- 10% for the purposes of Final Engineering, Long Lead Materials, and Preliminary Construction Activities.

This sanction amount is $1.950M broken down into:

$1.900 Capex
$0.000 Opex
$0.050 Removal

NOTE the potential investment of $2.348M with a tolerance of +/-25%, contingent upon submittal and approval of a Project Sanction paper following completion of Final Engineering, Long Lead Materials, and Preliminary Construction Activities.

1.2 Project Summary

This is a project to replace the existing 34.5 - 12.47/7.2 kV, 5/6.25 MVA No. 1 transformer, Equipment ID #20837, at Lafayette #30 Substation in North Kingston, Rhode Island due to asset condition issues. In addition, the motor operated disconnect switches will be replaced due to condition issues, and the project will include the replacement of the associated wood pole box structure with our standard aluminum pole box structure. Lastly, EMS will be expanded to provide status, control and monitoring.

REDACTED

2 Project Detail

2.1 Background

Lafayette Substation #30 is located in North Kingston, Rhode Island. Presently, there are two feeders out of this station serving approximately 3,600 customers. The existing No.1 transformer is a 34.5 - 12.47Y/7.2 kV delta-wye, 5/6.25 MVA unit that has condition issues. Recent tests indicate that the unit is wet and contaminated. The Furan Analysis, which detects cellulose by-products in the oil, reveals that the insulation system is deteriorated and near its end of useful life. The transformer is 56 years of age, and the unit has been on our Transformer Replacement and Watch Lists. The transformer is being proactively replaced due to a high likelihood of failure. In addition, the motor operated air break switches, No. 301 and 302, are in need of replacement. In 2010, the live parts of the motor operated air-break switches were replaced with load break components due to a switch failure. Since then, Substation O&M have been called approximately twelve times due to the misalignment of the blades resulting in the switches not opening or closing fully. In February 2014, the 301 switch failed to open to isolate a fault and consequently the 302 closed in on the fault causing a station outage that impacted 4,809 customers. It is presumed that the operating mechanisms do not appropriately match-up with the larger load break components.

2.2 Drivers

The primary driver for this project is asset condition. The No 1 transformer at Lafayette #30 Substation is in poor condition due to a wet, contaminated and deteriorated insulation system. This is a proactive approach to address an existing condition issue in an effort to maintain reliability and improve our infrastructure. This project is part of the Transformer Substation Strategy, and is in-line with our transformer asset replacements.

2.3 Project Description

Transformer No. 1 rated 34.5 kV – 12.47/7.2 kV delta-wye, 5/6.25 MVA will be replaced with a standard unit rated 34.5 kV – 12.47 kV delta-wye, 7.5 /9.375 MVA. The No.1 and 2 transformer primary 34.5 kV air break switches will be replaced with 34.5 kV reclosers, and the existing fuses will be replaced with 34.5 kV disconnects. The 4 pole wooden box structure will be replaced with a 4 pole aluminum box structure due to the poor condition of the wooden poles. The two 34.5 kV motor operated load break switches, equipment position 301 and 302, will be replaced with two new 34.5 kV motor operated load break switches. This will include the motor operator, outdoor yard AC panel, and the transfer scheme control cabinet. One 34.5 kV gang-operated manual disconnect switch will be installed.

The relay protection for the new transformer and recloser will be upgraded on transformer No.1, and the relay recloser protection scheme will be upgraded on

REDACTED

transformer No.2. The existing RTU will expand EMS to provide remote status, control and monitoring of all switching devices, transformers, voltage regulation and battery systems. Alarming will include transformer low oil; transformer, circuit breaker, relay and battery system trouble. Monitoring will include voltage and current for all three phases and neutral, MW, MVAR, and MVA. Control will include trip and close on all switching devices; reclose on/off on circuit breakers; ground relay control on feeders for switching, and control of voltage regulation.

In order to perform this work, Feeders 30F1 and 30F2, and the 34.5 kV bus will require an outage. It is suggested that this work be performed during off peak loading, and will be further evaluated by the regional control center.

The existing and proposed single-line diagrams along with the proposed plan view can be found in the Appendix.

2.4 Benefits

This project will maintain reliability in the area by eliminating the asset condition issues associated with the deteriorated and contaminated transformer insulation system and the miss-alignment issues with the motor operated load break switches at the Lafayette Substation. Upgrading the capacity of the No. 1 transformer will improve capacity requirements and allow for future growth in the area. By expanding EMS, this will improve remote access and control to the Regional Control Center and improve incident response recovery. EMS Expansion is in line with the RTU Installation and EMS Expansion Strategy.

2.5 Business & Customer Issues

There are no significant business issues beyond what has been described elsewhere.

2.6 Alternatives

Alternative 1: Replace T1, Regulators and Implement Breaker and a Half Design
Alternative 1 recommends the replacement of the existing No.1 transformer to a larger unit, replacement of the No. 1 and 2 primary air-break switches and fuses with 34.5 kV reclosers and disconnects, and the re-configuration of the structure to a breaker and a half design. This alternative is not recommended because based upon the rating of the transformers, a breaker and a half design is not standard; the station is not large enough, and the 34.5 kV structure would require re-alignment and must be moved.

2.7 Investment Recovery

Investment recovery will be through standard rate recovery mechanisms.

REDACTED

2.7.1 Customer Impact

This project results in an indicative first full year revenue requirement when the asset is placed in service equal to approximately $0.445M. This is indicative only. The actual revenue requirement will differ, depending upon the timing of the next rate case and/or the timing of the next filing in which the project is included in rate base.

3 Related Projects, Scoring, Budgets

3.1 Summary of Projects

Project Number	Project Type (Elec only)	Project Title	Estimate Amount ($M)
C051824	D-Sub	Lafayette Transformer Replacement	2.348
		Total	2.348

3.2 Associated Projects

N/A

3.3 Prior Sanctioning History

Date	Governance Body	Sanctioned Amount	Paper Title	Sanction Type
9/2/14	USSC	$514,000	Lafayette Transformer Replacement	Partial
9/26/13	Power Plant	$311,200	Lafayette Sub Transformer Replacement	Partial
2/6/13	DCIG	N/A	Distribution Substation Transformer Strategy – DCIG1009S183	Strategy
10/1/10	DCIG	N/A	Substation RTU Installation Strategy – DCIG1010S317	Strategy

3.4 Category

Category	Reference to Mandate, Policy, or NPV Assumptions

○ Mandatory ◉ Policy- Driven ○ Justified NPV	Transformer Asset Replacement Program EMS Expansion/RTU Installation Program

3.5 Asset Management Risk Score

Asset Management Risk Score: 35

Primary Risk Score Driver: (Policy Driven Projects Only)

◉ Reliability ○ Environment ○ Health & Safety ○ Not Policy Driven

3.6 Complexity Level

○ High Complexity ◉ Medium Complexity ○ Low Complexity ○ N/A

Complexity Score: 19

3.7 Next Planned Sanction Review

Date (Month/Year)	Purpose of Sanction Review
April - 2017	Project Sanction

4 Financial

4.1 Business Plan

Business Plan Name & Period	Project included in approved Business Plan?	Over / Under Business Plan	Project Cost relative to approved Business Plan ($)
New England Distribution FY16 – FY20	◉ Yes ○ No	◉ Over ○ Under ○ NA	$0.612M

4.1.1 If cost > approved Business Plan how will this be funded?

Re-allocation of funds within the portfolio will be managed by Resource Planning to meet jurisdictional budgetary, statutory and regulatory requirements.

4.2 CIAC / Reimbursement

N/A

4.3 Cost Summary Table

					Current Planning Horizon ($M)						
					Yr. 1	Yr. 2	Yr. 3	Yr. 4	Yr. 5	Yr. 6 +	
Project Number	Project Title	Project Estimate Level (%)	Spend	Prior Yrs	2015/16	2016/17	2017/18	2018/19	2019/20	2020/21	Total
C051824	Lafayette Transformer Replacement	+/- 25%	CapEx	0.356	0.152	0.209	1.516	-	-	-	2.233
			OpEx	0.001	-	-	-	-	-	-	0.001
			Removal	-	-	-	0.114	-	-	-	0.114
			Total	0.357	0.152	0.209	1.630	-	-	-	2.348

4.4 Project Budget Summary Table

Project Costs per Business Plan

		Current Planning Horizon ($M)						
	Prior Yrs	Yr. 1	Yr. 2	Yr. 3	Yr. 4	Yr. 5	Yr. 6 +	
$M	(Actual)	2015/16	2016/17	2017/18	2018/19	2019/20	2020/21	Total
CapEx	0.356	0.475	0.850	0.000	0.000	0.000	0.000	1.681
OpEx	0.001	0.010	0.017	0.000	0.000	0.000	0.000	0.028
Removal	0.000	0.010	0.017	0.000	0.000	0.000	0.000	0.027
Total Cost in Bus. Plan	0.357	0.495	0.884	0.000	0.000	0.000	0.000	1.736

Variance (Business Plan-Project Estimate)

		Current Planning Horizon ($M)						
	Prior Yrs	Yr. 1	Yr. 2	Yr. 3	Yr. 4	Yr. 5	Yr. 6 +	
$M	(Actual)	2015/16	2016/17	2017/18	2018/19	2019/20	2020/21	Total
CapEx	0.000	0.323	0.641	(1.516)	0.000	0.000	0.000	(0.552)
OpEx	0.000	0.010	0.017	0.000	0.000	0.000	0.000	0.027
Removal	0.000	0.010	0.017	(0.114)	0.000	0.000	0.000	(0.087)
Total Cost in Bus. Plan	0.000	0.343	0.675	(1.630)	0.000	0.000	0.000	(0.612)

REDACTED

5 Key Milestones

Milestone	Target Date: (Month/Year)
Initial Partial Sanction Approval	September 2014
Preliminary Engineering Complete	August 2015
Partial Sanction Approval	January 2016
Final Engineering Design Complete	September 2016
Project Sanction	April 2017
Construction Start	July 2017
Construction Complete	January 2018
Project Closure Report	April 2018

6 Statements of Support

6.1.1 Supporters

The supporters listed have aligned their part of the business to support the project.

Role	Name	Responsibilities
Investment Planner	Michelle Park	Endorses relative to 5-year business plan or emergent work
Resource Planning D-Sub	Mark Phillips	Endorses resources, cost, schedule and portfolio alignment
Asset Management/Planning	Alan Labarre	Endorses scope, cost, and schedule with the companys goals, strategies, and objectives
Engineering and Design	Susan Martuscello	Endorses scope, design, design standard
Engineering and Design	Leonard Swanson	Endorses scope, design, design standard
Project Management	Andrew Schneller	Endorses resource, cost, schedule

6.1.2 Reviewers

The reviewers have provided feedback on the content/language of the paper.

Reviewer List	Name
Finance	Keith Fowler
Finance	Philip Horowitz
Regulatory	Peter Zschokke
Jurisdictional Delegates	Jim Patterson
Procurement	Art Curran
Control Centers	Michael Gallagher

6.1.3 List References

N/A

REDACTED

7 ***Decisions***

I:

(a) APPROVE the investment of **$1.950M** and a tolerance of +/- 10% for Final Engineering, Long Lead Materials, and Preliminary Construction Activities.

(b) NOTE the potential investment of **$2.348M** and a tolerance of +/-25%, contingent upon submittal and approval of a Project Sanction paper following completion of final engineering and design.

(c) NOTE that Bradley Wheeler is the Project Manager and has the approved financial delegation to undertake the activities stated in (a).

Signature.....Date...1/7/16..

Executive Sponsor – Marie Jordan, SVP Electric Process & Engineering

8 Other Appendices

8.1 Sanction Request Breakdown by Project

$M	C051824
CapEx	1.900
OpEx	0.000
Removal	0.050
Total	1.950

8.2 Figures

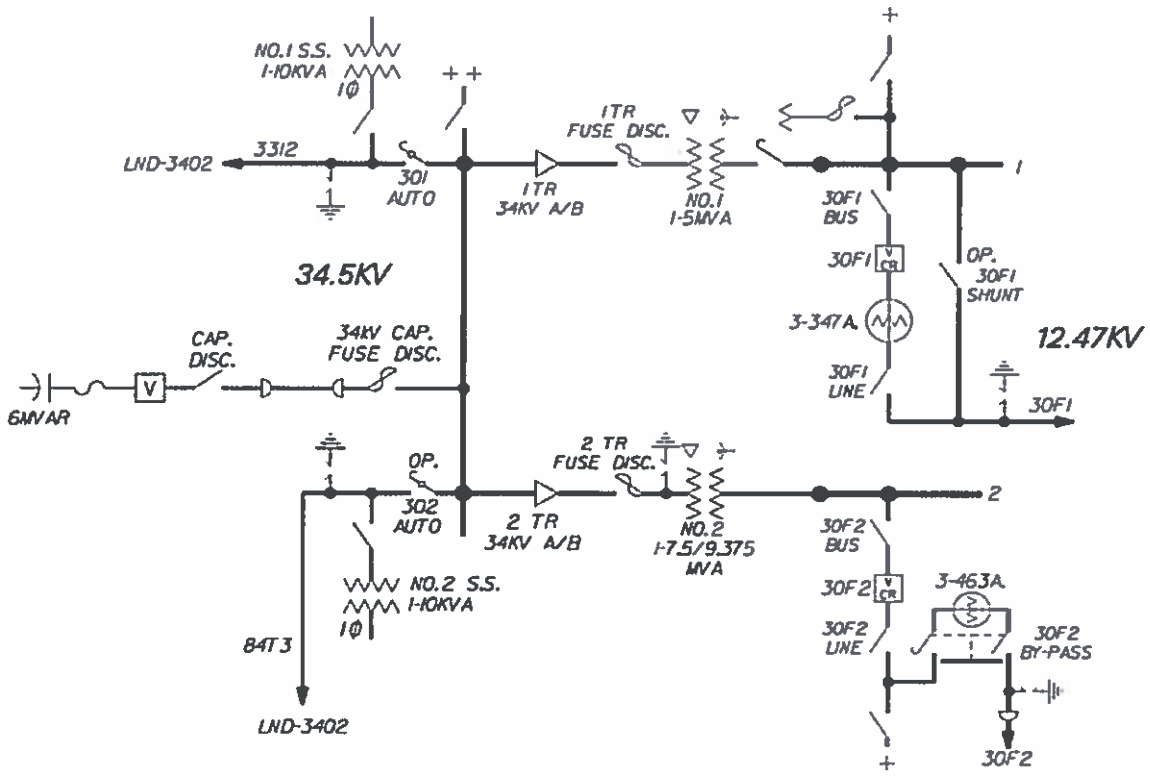

Figure 1. Existing One-line Drawing of Lafayette #30 Substation

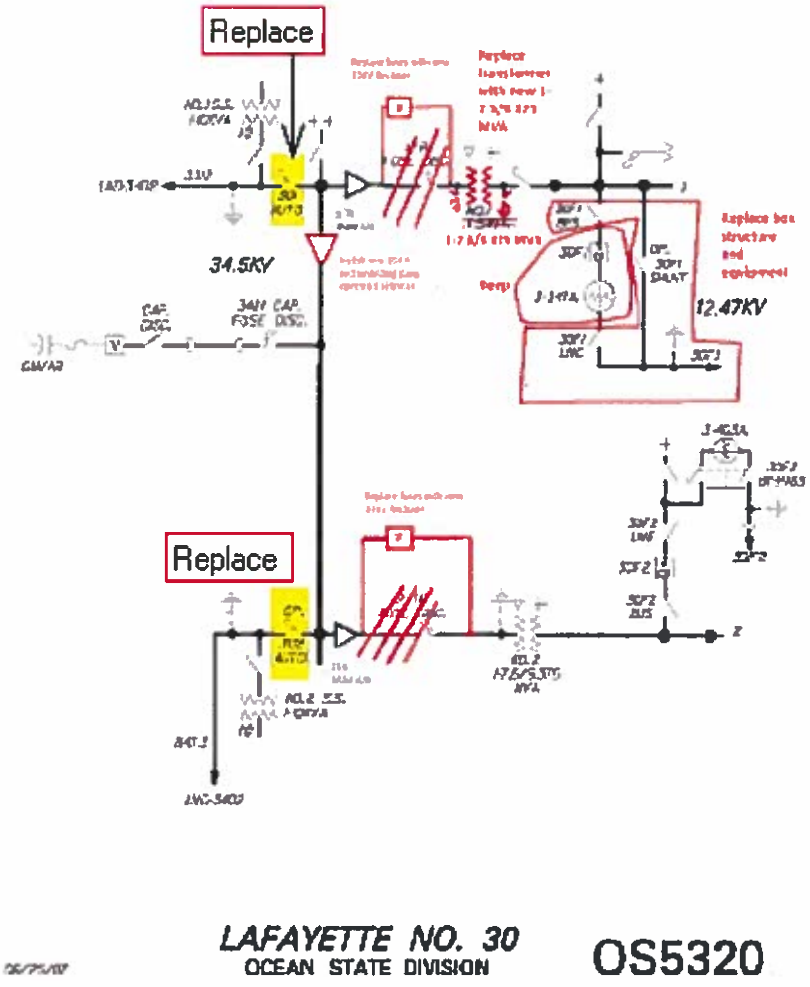

Figure 2. Proposed One-line Diagram for Lafayette #30 Substation

D

Short Form Sanction Paper- Instructions

nationalgrid

Title:	Lafayette Transformer Replacement	**Sanction Paper #:**	USSC-14-223
Project #:	C051824	**Sanction Type:**	Partial Sanction
Operating Company:	The Narragansett Electric Co.	**Date of Request:**	September 2, 2014
Author:	Eileen Duarte	**Sponsor:**	John E. Gavin (Acting) Vice President, Asset Management
Utility Service:	Electricity T&D	**Project Manager:**	Brad Wheeler

1 Executive Summary

1.1 Sanctioning Summary

This paper requests partial sanction of C051824 in the amount $0.514M with a tolerance of +/- 10% for the purposes of Preliminary Engineering, Final Engineering, Long Lead Materials, and Preliminary Construction Activities.

This sanction amount is $0.514M broken down into:

$0.512 Capex
$0.000 Opex
$0.002 Removal

NOTE the potential investment of $1.762M with a tolerance of +50/-25%, contingent upon submittal and approval of a Project Sanction paper following completion of Preliminary Engineering, Final Engineering, Long Lead Materials, and Preliminary Construction Activities.

1.2 Project Summary

This is a project to replace the existing 34.5 - 12.47/7.2 kV, 5/6.25 MVA No. 1 transformer, Equipment ID #20837, at Lafayette #30 Substation in North Kingston, Rhode Island due to asset condition issues. In addition, the motor operated disconnect switches will be replaced due to condition issues, and the project will include the opportunistic replacement of the associated wood pole box structure with our standard aluminum pole box structure. Lastly, EMS will be expanded to provide status, control and monitoring.

REDACTED

2 Project Detail

2.1 Background

Lafayette Substation #30 is located in North Kingston, Rhode Island. Presently, there are two feeders out of this station serving approximately 3,600 customers. The existing No.1 transformer is a 34.5 - 12.47Y/7.2 kV delta-wye, 5/6.25 MVA unit that has condition issues. Recent tests indicate that the unit is wet and contaminated. The Furan Analysis, which detects cellulose by-products in the oil, reveals that the insulation system is deteriorated and near its end of useful life. The transformer is 56 years of age, and the unit has been on our Transformer Replacement and Watch Lists. The transformer is being proactively replaced due to a high likelihood of failure. In addition, the motor operated air break switches, No. 301 and 302, are in need of replacement. In 2010, the live parts of the motor operated air-break switches were replaced with load break components due to a switch failure. Since then, Substation O&M have been called approximately twelve times due to the misalignment of the blades resulting in the switches not opening or closing fully. In February 2014, the 301 switch failed to open to isolate a fault and consequently the 302 closed in on the fault causing a station outage that impacted 4,809 customers. It is presumed that the operating mechanisms do not appropriately match-up with the larger load break components.

2.2 Drivers

The primary driver for this project is asset condition. The No 1 transformer at Lafayette #30 Substation is in poor condition due to a wet, contaminated and deteriorated insulation system. This is a proactive approach to address an existing condition issue in an effort to maintain reliability and improve our infrastructure. This project is part of the Transformer Substation Strategy, and is in-line with our transformer asset replacements.

2.3 Project Description

Transformer No. 1 rated 34.5 kV – 12.47/7.2 kV delta-wye, 5/6.25 MVA will be replaced with a standard unit rated 34.5 kV – 12.47 kV delta-wye, 7.5 /9.375 MVA. The No.1 and 2 transformer primary 34.5 kV air break switches will be replaced with 34.5 kV reclosers, and the existing fuses will be replaced with 34.5 kV disconnects. The 4 pole wooden box structure will be replaced with a 4 pole aluminum box structure due to the poor condition of the wooden poles. The two 34.5 kV motor operated load break switches, equipment position 301 and 302, will be replaced with two new 34.5 kV motor

REDACTED

operated load break switches. This will include the motor operator, outdoor yard AC panel, and the transfer scheme control cabinet. One 34.5 kV gang-operated manual disconnect switch will be installed.

The relay protection for the new transformer and recloser will be upgraded on transformer No.1, and the relay recloser protection scheme will be upgraded on transformer No.2. The existing RTU will expand EMS to provide remote status, control and monitoring of all switching devices, transformers, voltage regulation and battery systems. Alarming will include transformer low oil; transformer, circuit breaker, relay and battery system trouble. Monitoring will include voltage and current for all three phases and neutral, MW, MVAR, and MVA. Control will include trip and close on all switching devices; reclose on/off on circuit breakers; ground relay control on feeders for switching, and control of voltage regulation.

In order to perform this work, Feeders 30F1 and 30F2, and the 34.5 kV bus will require an outage. It is suggested that this work be performed during off peak loading, and will be further evaluated by the regional control center.

The existing and proposed single-line diagrams along with the proposed plan view can be found in the Appendix.

2.4 Benefits

This project will maintain reliability in the area by eliminating the asset condition issues associated with the deteriorated and contaminated transformer insulation system and the miss-alignment issues with the motor operated load break switches at the Lafayette Substation. Upgrading the capacity of the No. 1 transformer will improve capacity requirements and allow for future growth in the area. By expanding EMS, this will improve remote access and control to the Regional Control Center and improve incident response recovery. EMS Expansion is in line with the RTU Installation and EMS Expansion Strategy.

2.5 Business & Customer Issues

There are no significant business issues beyond what has been described elsewhere.

2.6 Alternatives

Alternative 1: Replace T1, Regulators and Implement Breaker and a Half Design

Alternative 1 recommends the replacement of the existing No.1 transformer to a larger unit, replacement of the No. 1 and 2 primary air-break switches and fuses with 34.5 kV reclosers and disconnects, and the re-configuration of the structure to a breaker and a

half design. This alternative is not recommended because based upon the rating of the transformers, a breaker and a half design is not standard; the station is not large enough, and the 34.5 kV structure would require re-alignment and must be moved.

2.7 Investment Recovery

Investment recovery will be through standard rate recovery mechanisms.

2.7.1 Customer Impact

This project results in an indicative first full year revenue requirement when the asset is placed in service equal to approximately $0.333M. This is indicative only. The actual revenue requirement will differ, depending upon the timing of the next rate case and/or the timing of the next filing in which the project is included in rate base.

3 Related Projects, Scoring, Budgets

3.1 Summary of Projects

Project Number	Project Type (Elec only)	Project Title	Estimate Amount ($M)
C051824	D-Sub	Lafayette #30 Transformer Replacement	$1.762
		Total	$1.762

3.2 Associated Projects

N/A

REDACTED

Describe previous sanctions for the projects included in the scope of this paper (Newest to Oldest).

Date	Governance Body	Sanctioned Amount	Paper Title	Sanction Type
9/26/13	Power Plant	$311,200	Lafayette Sub Transformer Replacement	Partial
2/6/13	DCIG	N/A	Distribution Substation Transformer Strategy – DCIG1009S183	Strategy
10/1/10	DCIG	N/A	Substation RTU Installation Strategy – DCIG1010S317	Strategy

3.3 Category

Category	Reference to Mandate, Policy, or NPV Assumptions
○ Mandatory	
◉ Policy- Driven	Transformer Asset Replacement Program EMS Expansion/RTU Installation Program
○ Justified NPV	

3.4 Asset Management Risk Score

Asset Management Risk Score: 35

Primary Risk Score Driver: (Policy Driven Projects Only)

◉ Reliability ○ Environment ○ Health & Safety ○ Not Policy Driven

3.5 Complexity Level

○ High Complexity ◉ Medium Complexity ○ Low Complexity ○ N/A

Complexity Score: 19

4 Financial

4.1 Business Plan

Business Plan Name & Period	Project included in approved Business Plan?	Over / Under Business Plan	Project Cost relative to approved Business Plan ($)
FY15 – FY19 Capital Investment Plan	◉ Yes ○ No	○ Over ◉ Under ○ NA	$1.294M

4.1.1 If cost > approved Business Plan how will this be funded?

4.2 CIAC / Reimbursement

N/A

4.3 Cost Summary Table

				Current Planning Horizon							
	Project Description	Estimate Level	$M	Prior Yrs	Yr. 1 2014/15	Yr. 2 2015/16	Yr. 3 2016/17	Yr. 4 2017/18	Yr. 5 2018/19	Yr. 6 + 2019/20	Total
Project #	Description		Capex	$0.168	$0.193	$0.453	$0.850	$0.000	$0.000	$0.000	$1.664
C051824	Lafayette Transformer Replacement	-25%+50%	Opex	$0.000	$0.000	$0.000	$0.000	$0.000	$0.000	$0.000	$0.000
			Removal	$0.000	$0.000	$0.020	$0.078	$0.000	$0.000	$0.000	$0.098
			Total	$0.168	$0.193	$0.473	$0.928	$0.000	$0.000	$0.000	$1.762

4.4 Project Budget Summary Table

Project Costs Per Business Plan

Project Budget Summary Table			Yr. 1	Yr. 2	Yr. 3	Yr. 4	Yr. 5	Yr. 6 +	
Project Costs per Business Plan		Prior Yrs	2014/15	2015/16	2016/17	2017/18	2018/19	2019/20	Total
	Capex	$0.150	$0.150	$1.300	$1.300	$0.000	$0.000	$0.000	$2.900
	Opex	$0.000	$0.005	$0.039	$0.039	$0.000	$0.000	$0.000	$0.083
	Removal	$0.000	$0.003	$0.026	$0.026	$0.000	$0.000	$0.000	$0.055
	Total Cost in B Plan	$0.150	$0.158	$1.365	$1.365	$0.000	$0.000	$0.000	$3.038
* P/Y Actuals			Yr. 1	Yr. 2	Yr. 3	Yr. 4	Yr. 5	Yr. 6 +	
Variance (Business Plan-Project		Prior Yrs	2014/15	2015/16	2016/17	2017/18	2018/19	2019/20	Total
	Capex	$0.000	($0.043)	$0.847	$0.450	$0.000	$0.000	$0.000	$1.254
	Opex	$0.000	$0.005	$0.039	$0.039	$0.000	$0.000	$0.000	$0.083
	Removal	$0.000	$0.003	$0.006	($0.052)	$0.000	$0.000	$0.000	($0.043)
	Total Variance	$0.000	($0.035)	$0.892	$0.437	$0.000	$0.000	$0.000	$1.294

The project is budgeted under Project Funding Number C025803 in the FY15-FY19 Capital Investment Plan.

5 Key Milestones

Milestone	Target Date: (Month/Year)
Partial Sanction Approval	09/14
Preliminary Engineering Complete	06/15
Final Engineering Design Complete	03/16
Project Sanction	04/16
Construction Start	07/16
Construction Complete	01/17
Project Closure Report	04/17

REDACTED

6 Statements of Support

6.1.1 Supporters

The supporters listed have aligned their part of the business to support the project.

Role	Name	Responsibilities
Investment Planner	Glen Diconza	Endorses relative to 5-year business plan or emergent work
Resource Planning D-Sub	Mark Phillips	Endorses resources, cost, schedule
Distribution Planning	Alan T. Labarre	Endorses scope, design, design standard
Engineering and Design	Susan Martuscello	Endorses scope, design, design standard
Engineering and Design	Leonard Swanson	Endorses scope, design, design standard
Project Management	Timothy Moore	Endorses resource, cost, schedule

6.1.2 Reviewers

The reviewers have provided feedback on the content/language of the paper.

Reviewer List	Name
Finance	Keith Fowler
Regulatory	Peter Zschokke
Jurisdictional Delegates	Jennifer Grimsley
Procurement	Art Curran
Control Centers	Michael Gallagher

REDACTED

7 ***Decisions***

I:

(a) APPROVE the investment of **$0.514M** and a tolerance of +/- 10% for Preliminary Engineering, Final Engineering, Long Lead Materials, and light Construction Activities.

(b) NOTE the potential investment of **$1.762M** and a tolerance of +50/-25%, contingent upon submittal and approval of a Project Sanction paper following completion of final engineering and design.

(c) NOTE that Brad Wheeler is the Project Manager and has the approved financial delegation to undertake the activities stated in (a).

Signature.....Date.....9/9/14.....

Executive Sponsor – Cheryl Warren, Senior Vice President, Network Strategy

8 Other Appendices

8.1 Sanction Request Breakdown by Project

$M	C051824
CapEx	$0.512
OpEx	$0.000
Removal	$0.002
Total	$0.514

8.2 One-line/Drawings/Photos

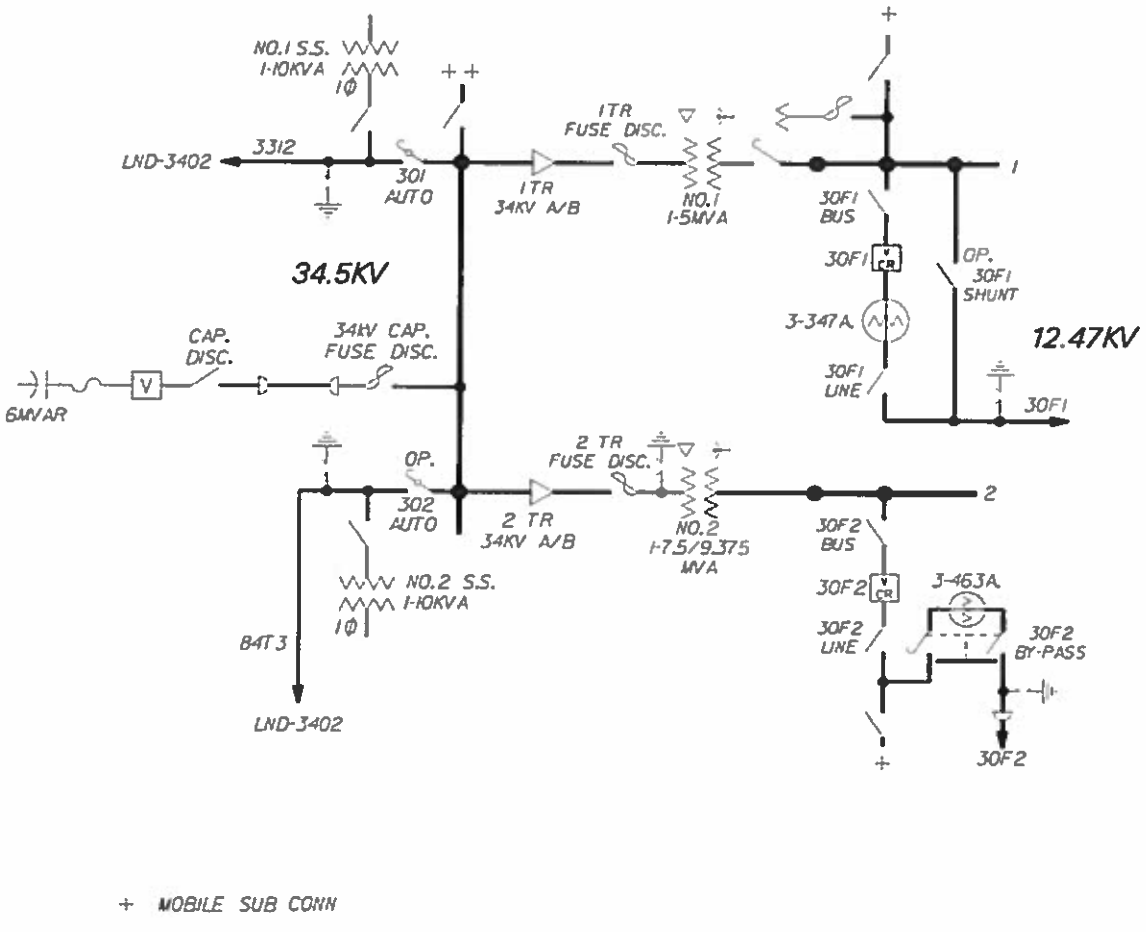

Figure 1. Existing One-line Drawing of Lafayette #30 Substation

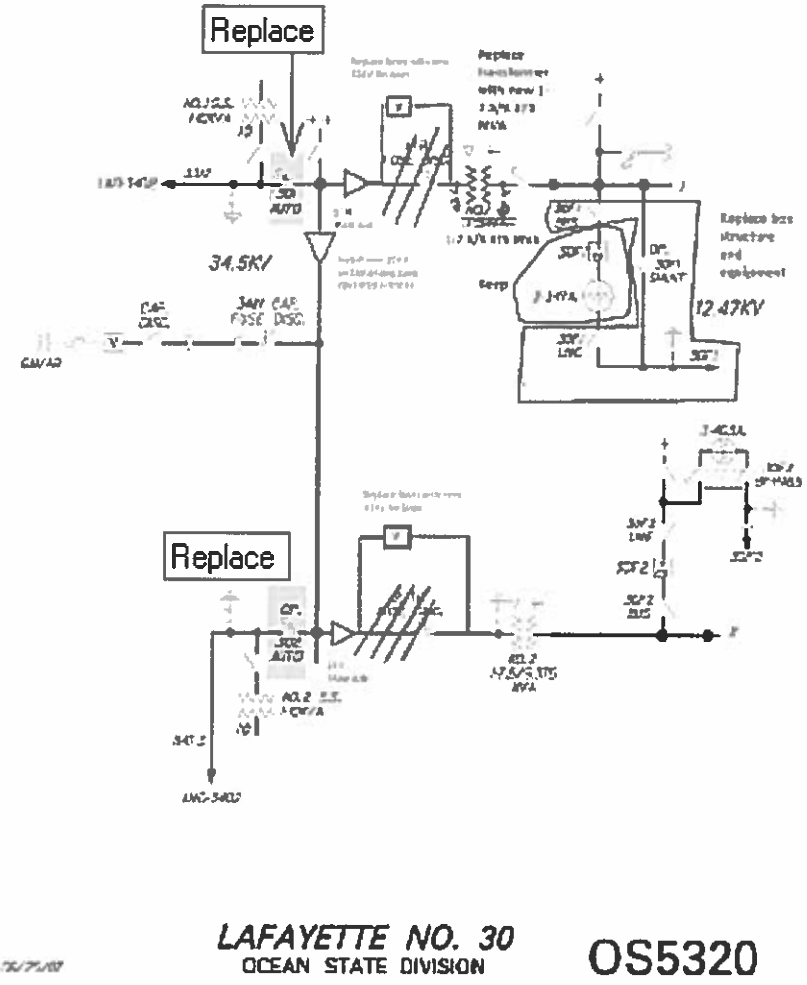

Figure 2. Proposed One-line Diagram for Lafayette #30 Substation

This document has been redacted for Critical Energy/Electric Infrastructure Information (CEII). 10/29/2018

nationalgrid

US Sanction Paper

Title:	Newport Area Transmission Reinforcements	**Sanction Paper #:**	USSC-14-261 v3
Project #:	C041183, C041184, C041185, CD00656	**Sanction Type:**	Sanction
Operating Company:	The Narragansett Electric Co.	**Date of Request:**	10/22/2018
Author:	Michael Hughes	**Sponsor:**	Brian Gemmell VP Asset Management & Planning
Utility Service:	Electricity T&D	**Project Manager:**	Michael Hughes

1 Executive Summary

1.1 *Sanctioning Summary*

This paper requests sanction of C041183, C041184, C041185 and CD00656 in the amount of $80.859M with a tolerance of +/- 10% for the purposes of full implementation.

This sanction amount is $80.859M broken down into:

$73.864M Capex
$0.050M Opex
$6.945M Removal

This project has undergone a Capital Efficiency Review with the following determination:

This project is in final design and/or has secured the necessary agency approvals to proceed and is ready to be released for construction. At this stage, re-evaluation of the project design would likely result in significant delays to the project schedule and an increase in cost. This project will be evaluated for any procurement or construction efficiency opportunities upon its release for construction.

1.2 *Project Summary*

Transmission Planning evaluated the thermal and voltage performance of the transmission system local to Aquidneck Island in Rhode Island, which consists of the

[redacted]

The April 2015 Newport Area (Aquidneck Island) Transmission Solution Study (the "Study") documented potential concerns with respect to the transmission planning

[redacted]

The Study identified the following thermal concerns:

- Dexter Substation: [redacted] overload for loss of either the 56 Mega Volt Amp (MVA) paralleled bank [redacted]
- 61 and 62 lines: For loss of either [redacted], the remaining line overloads.
- Jepson Substation: Breaker failures of the 3764 and 3765 breakers opens the [redacted] ring, and forces the flow to go through the remaining path that connects the load serving transformers and the 63 line supplying [redacted] Substation and Gate 2 Substation. [redacted]

The contingency thermal overloads described above occur at existing peak load levels or fractions thereof. These overloads were observed on the February 2017 Aquidneck Island Reliability Project System Impact Study in support of the Proposed Plan Application (the "2017 PPA Study").

To address the reliability, asset condition and environmental issues, the recommended plan is to:

- Rebuild Jepson Substation on a National Grid owned site across the street from the existing substation designed and operated [redacted]
- Convert the 61 and 62 lines [redacted]
- Remove the [redacted] transformation at the Dexter Substation and reconfigure the substation to maintain supply to the existing [redacted] transformer.

1.3 *Summary of Projects*

Project Number	Project Type (Elec only)	Project Title	Estimate Amount ($M)
C041183	T-Sub	Jepson [redacted]	19.520
C041184	T-Line	Line 61/62 Conversion	33.947
C041185	T-Sub	Dexter [redacted] Station	5.444
CD00656	D-Sub	Jepson Substation	21.948
		Total	80.859

1.4 *Associated Projects*

Project Number	Project Title	Estimate Amount ($M)
C015158	NEWPORT SUBSTATION (D-SUB)	10.425
C024159	NEWPORT [redacted] LINE 63 (D-LINE)	2.165
C028628	NEWPORT SUBTRANS & DIST CONVERSIO	18.926
C054052	NO AQUIDNECK RETIREMENT (D-SUB)	0.310
C054054	JEPSON SUBSTATION (D-LINE)	6.967
C058310	HARRISON SUB IMPROVEMENTS (D-SUB)	0.320
C058401	MERTON SUB IMPROVEMENTS (D-SUB)	0.330
C058404	KINGSTON SUB IMPROVEMENTS (D-SUB)	0.595
C058407	SOUTH AQUIDNECK RETIREMENT (D-SUB)	0.310
CD00649	GATE 2 SUBSTATION (D-SUB)	2.569
CD00651	BAILEY BROOK RETIREMENT (D-SUB)	0.448
CD00652	VERNON RETIREMENT (D-SUB)	0.310
	Total	43.675

Note: These associated projects are part of the distribution system reinforcements on Aquidneck Island. Besides addressing the concerns on the distribution system, these projects help address the voltage concerns observed on the transmission study. These associated projects are part of a separate sanction (USSC-14-262).

1.5 *Prior Sanctioning History*

Date	Governance Body	Sanctioned Amount	Potential Project Investment	Sanction Type	Potential Investment Tolerance
1/22/18	SESC	$51.822M	$71.705M*	Newport Area Transmission Reinforcements	Partial
12/10/14	USSC	$8.500M	$39.131M	Newport Area Transmission Reinforcements	Partial

* Note: Project No. CD00656 was transferred from sanction paper USSC-14-262 into this paper when this paper was partially sanctioned on 1/22/2018, since both the transmission and distribution components of the Jepson Substation will be implemented in parallel.

1.6 *Next Planned Sanction Review*

Date (Month/Year)	Purpose of Sanction Review
March 2021	Project Closure Sanction

1.7 *Category*

Category	Reference to Mandate, Policy, NPV, or Other
○ Mandatory ◉ Policy- Driven ○ Justified NPV ○ Other	Comply with applicable reliability standards such as, North American Electric Reliability Corporation (NERC) planning standards, Northeast Power Coordinating Council (NPCC) criteria, ISO-New England planning procedures and National Grid's Transmission Planning Guide (TGP28).

1.8 *Asset Management Risk Score*

Asset Management Risk Score: _49__

Primary Risk Score Driver: (Policy Driven Projects Only)

◉ Reliability ○ Environment ○ Health & Safety ○ Not Policy Driven

1.9 *Complexity Level*

◉ High Complexity ○ Medium Complexity ○ Low Complexity ○ N/A

Complexity Score: _32__

1.10 *Process Hazard Assessment*

A Process Hazard Assessment (PHA) is required for this project:

◉ Yes ○ No

1.11 *Business Plan*

Business Plan Name & Period	Project included in approved Business Plan?	Over / Under Business Plan	Project Cost relative to approved Business Plan ($)
FY19-23 NE Transmission Capital Plan	◉ Yes ○ No	◉ Over ○ Under ○ NA	11.034M
FY19-23 NE Distribution & Capital Plan	◉ Yes ○ No	○ Over ◉ Under ○ NA	1.353M

The project cost is over the existing FY19-23 NE Distribution & Transmission Capital Plan and the Potential Project Investment from the prior project partial sanction USSC-14-261 v2, dated 1/22/2018 as a result of the following variance:

- Several environmental and construction requirements (e.g., dewatering, Soil contamination, road improvements, retaining wall construction, matting, environmental control) were not fully developed during the preliminary and final engineering stages of the project. In return the planning grade estimates did not capture all the project's expected cost. The contractor cost obtained via competitive bidding process for the same scope resulted in increase of the project cost.

1.12 *If cost > approved Business Plan how will this be funded?*

Re-allocation of funds within the FY 19-23 NE Transmission Capital Plan portfolio has been managed and approved by Resource Planning to meet jurisdictional budgetary, statutory and regulatory requirements.

1.13 *Current Planning Horizon*

		Current Planning Horizon						
		Yr. 1	Yr. 2	Yr. 3	Yr. 4	Yr. 5	Yr. 6 +	
$M	Prior Yrs	2018/19	2019/20	2020/21	2021/22	2022/23	2023/24	Total
CapEx	17.761	35.906	13.106	7.091	0.000	0.000	0.000	73.864
OpEx	0.009	0.000	0.021	0.020	0.000	0.000	0.000	0.050
Removal	0.047	3.886	1.483	1.529	0.000	0.000	0.000	6.945
CIAC/Reimbursement	0.000	0.000	0.000	0.000	0.000	0.000	0.000	0.000
Total	17.817	39.792	14.610	8.640	0.000	0.000	0.000	80.859

1.14 *Key Milestones*

Milestone	Target Date: (Month/Year)
Partial Sanction	December 2014
Partial Sanction	January 2018
Engineering Design Complete - EDC	May 2018
Construction Start	May 2018
Project Sanction	October 2018
ISO Facility Ratings	March 2020
Ready for Load/Use	September 2020
Construction Complete - CC	November 2020
Project Closure Sanction	March 2021

1.15 *Resources, Operations and Procurement*

Resource Sourcing			
Engineering & Design Resources to be provided	☑ Internal	☑ Contractor	
Construction/Implementation Resources to be provided	☑ Internal	☑ Contractor	
Resource Delivery			
Availability of internal resources to deliver project:	○ Red	○ Amber	◉ Green
Availability of external resources to deliver project:	○ Red	○ Amber	◉ Green
Operational Impact			
Outage impact on network system:	○ Red	○ Amber	◉ Green
Procurement Impact			
Procurement impact on network system:	○ Red	○ Amber	◉ Green

1.16 *Key Issues (include mitigation of Red or Amber Resources)*

1	Outages are restricted to the spring and fall seasons. Construction sequence and planning is critical. Numerous outages will be required on the transmission and distribution lines. Coordination of outages with other planned projects in the Southern Massachusetts and Rhode Island region will be critical to timely delivery of the project.
2	Substation and transmission line work is contracted to different construction contractors. Coordination of the construction sequences and outages will be critical in order to avoid construction down time.
3	Transmission line work over and under distribution lines and road crossings is required. A PHA process will be put in place to identify and analyze the significance of hazardous situations associated with an activity to aid management in making critical safety decisions.
4	A major public outreach effort is required for communities impacted by the transmission line, substation, and distribution line construction activities.

1.17 *Climate Change*

Contribution to National Grid's 2050 80% emissions reduction target:	◉ Neutral	○ Positive	○ Negative
Impact on adaptability of network for future climate change:	○ Neutral	◉ Positive	○ Negative

1.18 *List References*

1	Aquidneck Island Reliability Project System Impact Study, February 2017.
2	Newport Area (Aquidneck Island) Transmission Needs/Solution Study Report, April 2015. Regional Project System Identification: 1669, 1670 and 1671.
3	Asset Condition Report Addendum – Jepson Sub #37, October 2013
4	Newport Area Supply and Distribution Study, May 2007

2 Decisions

The Senior Executive Sanctioning Committee (SESC) at a meeting held on 10/22/2018

(a) APPROVED this paper and the investment of $80.859M and a tolerance of +/- 10%

(b) NOTED that Michael Hughes is the Project Manager and has the approved financial delegation.

Signature.....Date.....10/25/18

Margaret Smyth
US Chief Financial Officer
Chair, Senior Executive Sanctioning Committee

3 *Sanction Paper Detail*

Title:	Newport Area Transmission Reinforcements	**Sanction Paper #:**	USSC-14-261 v3
Project #:	C041183, C041184, C041185, CD00656	**Sanction Type:**	Sanction
Operating Company:	The Narragansett Electric Co.	**Date of Request:**	10/22/2018
Author:	Michael Hughes	**Sponsor:**	Brian Gemmell VP Asset Management & Planning
Utility Service:	Electricity T&D	**Project Manager:**	Michael Hughes

3.1 *Background*

The Southeastern Massachusetts and Rhode Island (SEMA-RI) Area Needs Assessment (N-1) led by ISO-New England was presented to the Planning Advisory Committee (PAC) on February 19, 2014. This ISO-New England led study identified immediate potential thermal and voltage issues in the Somerset Area including the transmission facilities between the Dexter and Bell Rock substations in Aquidneck Island.

Transmission Planning confirmed the thermal and voltage performance of the transmission system local to Aquidneck Island in Rhode Island, which consists of the Dexter Substation [redacted], Jepson Substation [redacted], [redacted] Substation [redacted] and Gate 2 Substation [redacted], as well as the [redacted] lines 61, 62 and 63. The Study documents the thermal and voltage performance of the transmission system local to Aquidneck Island.

The Study identified low voltage concerns for loss of the [redacted] lines M13 or L14 that supply the Dexter Substation. The primary driver of low voltage is excessive voltage drop across the transmission system when a single line is forced to carry the entire Somerset/Bell Rock area and the Aquidneck Island load following the loss of the other line. This voltage concern is being addressed by the SEMA-RI suite of projects.

The Study identified the following thermal concerns, which were also observed in the 2017 PPA Study:

- At the Dexter Substation: The [redacted] overload for loss of either the 56 MVA paralleled bank or [redacted]
- 61 and 62 lines: For loss of either [redacted] line, the remaining line overloads.
- At the Jepson Substation: Breaker failures of the 3764 and 3765 breakers opens the [redacted] ring and forces the flow to go through the remaining path that connects

the load serving transformers and the 63 line supplying [redacted] and Gate 2. [redacted]

The Jepson Substation is the main point of transmission supply into the Aquidneck Island distribution and consists of [redacted] The Jepson Substation contains numerous poor asset condition issues and environmental concerns, as this substation is located entirely within the Zone A Watershed Protection Overlay.

3.2 *Drivers*

Based on the critical load level analysis documented on the April 2015 Newport Area (Aquidneck Island) Study, the need to resolve the thermal issues on the [redacted] lines 61 and 62, the [redacted] ring at the Jepson Substation and the [redacted] transformers at Dexter Substation is immediate. The 2017 PPA Study observed the thermal issues described above.

Besides the Jepson Substation being entirely within the Zone A Watershed Protection Overlay, the [redacted] equipment suffer from issues related to poor asset condition. Below is a summary of the asset condition issues at the Jepson Substation:

[redacted]

- The foundations for four oil-filled breakers would not match the dimension of the standard replacement gas circuit breaker.

[redacted]

Jepson 23 kV Station:

- Predominantly 1950s vintage equipment. All 23 kV breakers are obsolete.
- 23 kV bus is supported by pin type insulators. This design is unreliable and obsolete. The bus no longer meets current clearance and work space requirements.
- The 23 kV bus voltage is regulated by a Load Tap Changer (LTC) control scheme that often produces voltage problems and needs to be disabled and reset a few times a year. This scheme should be retired or replaced.
- Three power transformers in the yard are vintage 1950's and have no oil containment.

Jepson 4.16 kV Station:

- 1960s vintage 23/4.16 kV station with mostly original equipment.

- Obsolete design with single set of regulators supplying both feeders
- Entire bay no longer meets current clearances to energized parts.
- No Energy Management System (EMS) and both transformer and circuit recloser testing that indicates significant equipment deterioration is occurring.

Additionally, a portion of the Jepson Substation floods in the spring. On numerous occasions, the Jepson 13.8 kV station has been in the flooded area.

Furthermore, there is load at risk served from Jepson Substation, as described below:

- For loss of the Jepson [redacted] transformer, on peak approximately 22MW of load on Aquidneck Island would remain un-served until the transformer is replaced or a mobile is installed, resulting in an estimated exposure of 550MWh.
- [redacted]

3.3 *Project Description*

To address the identified concerns, the recommended plan is to:

[redacted]

3.4 *Benefits Summary*

The recommended plan will address the thermal, poor asset condition and load at risk concerns. It will also move the existing Jepson Substation out of the Zone A watershed Protection Overlay.

This plan results in more robust system performance and provides additional margin for future load growth, which is superior to other alternatives.

3.5 *Business and Customer Issues*

The success of this project is dependent upon full implementation of the projects associated with the distribution system reinforcements on Aquidneck Island. Besides addressing the concerns on the distribution system, these projects help address the

thermal concerns observed on the transmission study. These associated projects are part of a separate sanction (USSC-14-262).

For the Company's treatment of additional customer issues, refer to Section 4.4.

3.6 *Alternatives*

Alternative 1: Reinforce the Dexter Substation, Reconductor the 61/62 lines and Rebuild the Jepson Substation [redacted]

Dexter Substation:

[redacted]

Jepson Substation:

[redacted] The existing substation would be retired and all equipment removed.

61/62 [redacted] lines:
Reconductor the [redacted] 61 and 62 lines with 795 Aluminum Conductor Steel Supported (ACSS) conductor and replace the double circuit structures with [redacted] designed structures.

[redacted]

Compared to the chosen option, this alternative would require significant upgrades and additions at the Dexter Substation. This alternative moves the Jepson Substation out of the Zone A Watershed Protection Overlay, and it addresses the identified thermal issues similar to chosen plan, but it will not work beyond a load growth margin of 9%. Therefore, this option is not recommended.

Alternative 2: Non-Wires Alternative

An evaluation was performed for a Non-Wires Alternative (NWA) that would involve adding sufficient demand-side resources (energy efficiency, demand response, and distributed generation) at strategic locations on Aquidneck Island to defer or eliminate the need for the Project.

The feasibility of this approach was assessed consistent with the criteria set forth in Section 2.1.D of the System Reliability Procurement Standards (SRP Standards), adopted by the Rhode Island Public Utilities Commission (RIPUC) on June 10, 2014.

Given that proposed upgrade of the Jepson Substation is driven by asset condition issues, this upgrade will fail criterion 1 of the SRP Standards. In addition, as a result of the possible thermal overloads at the [redacted] ring bus, which cannot be addressed through load reductions less than 20 percent of the relevant peak load in the area (criterion 3 of the SRP Standards), the Company concluded that there is no NWA for the Jepson Substation portion of the Project.

The Company identified load reductions that would be required on Aquidneck Island to address the possible thermal overloads driving the need to upgrade the 61 and 62 lines. In making these calculations, the Company assumed the conductor clearance limitations on the 61 and 62 lines would be removed. Based on the load levels analyzed as part of the Study, the Company determined the following:

- In 2014, 23 MW of load reductions at the Gate II and [redacted] would be needed to address the possible N-1 contingency thermal overloads on the 61 and 62 lines. Peak load for this area is approximately 63 MW. The required load reduction therefore is approximately 36% of the relevant peak load.
- In 2022, 24 MW of load reductions at the Gate II, [redacted] would be needed to address the potential N-1 contingency thermal overloads on the 61 and 62 Lines. Peak load for this area was projected to be approximately 75 MW. The required load reduction is therefore approximately 32% of the relevant peak load.

A NWA for the 61 and 62 Line Upgrades clearly would fail criterion 3 of the SRP Standards. In addition, the construction start for the 61 and 62 Line Upgrades is less than 36 months called for in criterion (4) of the SRP Standards. Therefore, the Company concluded that an NWA for this portion of the project would not be feasible.

3.7 *Safety, Environmental and Project Planning Issues*

The Company will develop a health and safety plan and follow all National Grid safety and environmental rules.

Safety Issues:

- Outages will be taken to allow for work to be performed. However, work must be performed in proximity to live equipment.
- A thorough safety brief shall be conducted and emphasized via daily tailboard meetings. Proper personal protective equipment (PPE) shall be worn at all times.
- Grounding and tagging all isolation points will be performed to ensure equipment is de-energized before work can begin. Safety observers will be used as appropriate.
- Transmission line work over and under distribution lines and road crossings is required. A PHA process will be put in place to identify and analyze the significance of a hazardous situation associated with an activity to aid management in making critical safety decisions.

Environmental Issues:

- In-situ soil pre-characterization will be performed prior to removal or disposal of any soil excavated during construction. Several environmental and construction requirements (e.g., dewatering, Soil contamination, road improvements, retaining wall construction, matting, environmental control) were not fully developed during the preliminary and final engineering stages of the project. In return the planning grade estimates did not capture all the project's expected cost. The contractor cost obtained via competitive bidding process for the same scope resulted in increase of the project cost. Also, contingent has been added for soil removal in the existing Jepson substation previously thought to be less significant.

Project Planning Issues:

- Outages are restricted to the spring and fall seasons. Construction sequence and planning is critical. Numerous outages will be required on the transmission and distribution system. Coordination of outages with other planned projects in the Southern Massachusetts and Rhode Island region will be critical to timely delivery of the project.
- Substation and transmission line work is contracted to different construction contractors. Coordination of the construction sequences and outages will be critical in order to avoid construction down time.
- A major public outreach effort is required for communities impacted by the transmission line, substation, and distribution line construction activities

3.8 Execution Risk Appraisal

Number	Detailed Description of Risk / Opportunity	Probability	Impact		Score		Strategy	Pre-Trigger Mitigation Plan	Residual Risk	Post Trigger Mitigation Plan
			Cost	Schedule	Cost	Schedule				
1	If National Grid cancels an outage that was included in the contractors schedule then National Grid is responsible for any schedule impact and any schedule recovery costs directly attributable to the cancelled Outage (only if the outage was cancelled by National Grid and not by others)	3	3	4	9	12	Avoid	Schedule Outages during the Fall and Spring as far from peak demand seasons as possible- i.e. avoid scheduling on the shoulders of Spring and Fall seasons. Hold regular coordination meetings with other projects in the area (i.e. SEMA RI project). Request missed outage contingency plans from finalist contractors during Q&A – redistribution of work through flexible/contingency scheduling to use available time and resources effectively.	N/A	Implement missed outage contigency plan as agreed with the contractor during the RFP event
2	Both Dexter and Jepson substations may have building and/or soil contaminants. Risks include unforeseen types or levels of contamination that would result in: a) greater re-mediation expense than budgeted; b) impacts to the [redacted] construction schedule; c) additional construction labor to work around contaminants; and/or assist with segregation of contaminants; d) need for additional Hazmat Training for contractor personnel; e) possible stand-by time for [redacted] if crews are unable to access portions or all of work-site; f) possible furlough of crews with de-mobilization and re-mobilization to allow contaminants to be removed.	3	4	2	12	6	Accept	National Grid will test the soils and/or any material suspected to be containing hazardous material. Advise contractors of the potential hazardous material risks and ask for adaptive scheduling that will allow more flexibility in crew assignments while the approved environmental management company is removing contaminants.	N/A	If contaminated materials are found, National Grid will coordinate the abatment, transporation and disposal of hazardous waste in a timely manner so that it does not impact the contractors schedule. If the contamination is more than estimated , National Grid may also be responsible for additional effort on the contractors part to a) work around contaminants and b) cease work and possibly demobilize until contaminants are removed.
3	Delays due to transmission line cutovers into the Jepson Sub. National Grid's Transmission Line Services (TLS) will rebuild and upgrade [redacted]	1	3	4			Avoid	Schedule re-occuring project meeting status between TLS and substation contractor to asses project resources and status	N/A	N/A
4	Relocation of unforseen utilities such as electric, gas, or water lines on the each of the project sites.	3	3	1	9		Accept	The contractor scope of work includes detailed surveying of all work sites that require excavating. The purpose of the survey is to discover any unforseen subsurface conflicts prior to final engineering	N/A	If evidence of a conflict/manmade obstruction does exist for which a no cost (in-scope) engineering design or work around solution cannot be developed, then National Grid expects the contractor to provide a one-time lump-sum adjustment (documented as an itemized fixed price change-order) to remove or relocate the identified conflict(s)/manmade obstruction(s)

3.9 *Permitting*

Permit Name	Probability Required (Certain/ Likely/ Unlikely)	Duration To Acquire Permit	Status (Complete/ In Progress Not Applied For)	Estimated Completion Date
RIHPHC (RI Historic Preservation Office & Tribal Historic Preservation Consultation under Section 106 of the National Historic Preservation Act	Required	3 months	Complete	01/2016
RI Department of Environmental Management (RIDEM) Freshwater Wetlands Permit	Required	6 months	Complete	05/2017
RI Pollutant Discharge Elimination System (RIPDES) - Storm Water Discharge Associated with Construction Activities	Required	6 months	Complete	05/2017
Water Quality Certification Under Section 401 of the Clean Water Act	Required	6 months	Complete	05/2017
Army Corp of Engineers (ACOE) Section 404 Permit	Required	12 months	Complete	05/2017
RI Energy Facility Siting Board (EFSB) License	Required	12 months	Complete	06/2017
Local Planning &	Required	12 months	Complete	06/2017

Zoning Boards Approval – Special Variances				

3.10 *Investment Recovery*

3.10.1 Investment Recovery and Regulatory Implications

C041183 is 69% Pool Transmission Facility (PTF), C041184 is 100% PTF and C041185 is 40% PTF. CD00656 is a Distribution project.

Investment recovery will be through standard rate recovery mechanisms approved by appropriate regulatory agencies.

3.10.2 Customer Impact

This project results in an indicative first full year revenue requirement when the asset is placed in service equal to approximately $12.221M. This is indicative only. Recovery is through the following: Regional Service (RNS) of $6.936M; Local Network Service (LNS) of $1.337M; and distribution rates of $3.948M, depending upon the timing of the next rate case and/or the timing of the next filing in which the project is included in rate base.

3.10.3 CIAC / Reimbursement

N/A

3.11 *Financial Impact to National Grid*

3.11.1 Cost Summary Table

Project Number	Project Title	Project Estimate Level (%)	Spend ($M)	Prior Yrs	Current Planning Horizon Yr. 1 2018/19	Yr. 2 2019/20	Yr. 3 2020/21	Yr. 4 2021/22	Yr. 5 2022/23	Yr. 6 + 2023/24	Total
C041183	Jepson 115kV	Est Lvl (e.g. +/- 10%)	CapEx	6.553	6.631	3.150	2.285	0.000	0.000	0.000	18.619
			OpEx	0.008	0.000	0.000	0.000	0.000	0.000	0.000	0.008
			Removal	0.014	0.003	0.251	0.625	0.000	0.000	0.000	0.893
			Total	6.575	6.634	3.401	2.910	0.000	0.000	0.000	19.520
C041184	Line 61/62 Conversion	Est Lvl (e.g. +/- 10%)	CapEx	5.773	19.720	3.152	0.665	0.000	0.000	0.000	29.310
			OpEx	0.000	0.000	0.021	0.020	0.000	0.000	0.000	0.041
			Removal	0.000	3.713	0.712	0.171	0.000	0.000	0.000	4.596
			Total	5.773	23.433	3.885	0.856	0.000	0.000	0.000	33.947
C041185	Dexter 115kV Station	Est Lvl (e.g. +/- 10%)	CapEx	2.169	0.714	0.965	0.734	0.000	0.000	0.000	4.582
			OpEx	0.001	0.000	0.000	0.000	0.000	0.000	0.000	0.001
			Removal	0.032	0.170	0.401	0.258	0.000	0.000	0.000	0.861
			Total	2.202	0.884	1.366	0.992	0.000	0.000	0.000	5.444
CD00656	Jepson Substation	Est Lvl (e.g. +/- 10%)	CapEx	3.266	8.841	5.839	3.407	0.000	0.000	0.000	21.353
			OpEx	0.000	0.000	0.000	0.000	0.000	0.000	0.000	0.000
			Removal	0.001	0.000	0.119	0.475	0.000	0.000	0.000	0.595
			Total	3.267	8.841	5.958	3.882	0.000	0.000	0.000	21.948
Total Project Sanction			CapEx	17.761	35.906	13.106	7.091	0.000	0.000	0.000	73.864
			OpEx	0.009	0.000	0.021	0.020	0.000	0.000	0.000	0.050
			Removal	0.047	3.886	1.483	1.529	0.000	0.000	0.000	6.945
			Total	17.817	39.792	14.610	8.640	0.000	0.000	0.000	80.859

Note that Project No. CD00656 was transferred from sanction paper USSC-14-262 into this paper when this paper was partially sanctioned on 1/22/2018 since the distribution component of the Jepson Substation will be implemented in parallel with the transmission component (Project No. C041183).

It is expected that the plant will be capitalized at the ready for load date, unless otherwise specified.

3.11.2 Project Budget Summary Table

Project Costs Per Business Plan – Transmission

$M	Prior Yrs (Actual)	Current Planning Horizon Yr. 1 2018/19	Yr. 2 2019/20	Yr. 3 2020/21	Yr. 4 2021/22	Yr. 5 2022/23	Yr. 6 + 2023/24	Total
CapEx	14.495	21.696	5.913	2.786	0.000	0.000	0.000	44.890
OpEx	0.009	0.372	0.074	0.023	0.000	0.000	0.000	0.478
Removal	0.046	1.279	0.637	0.547	0.000	0.000	0.000	2.509
Total Cost in Bus. Plan	14.550	23.347	6.624	3.356	0.000	0.000	0.000	47.877

Variance - Transmission (Business Plan-Project Estimate)

		Current Planning Horizon						
	Prior Yrs	Yr. 1	Yr. 2	Yr. 3	Yr. 4	Yr. 5	Yr. 6 +	
$M	(Actual)	2018/19	2019/20	2020/21	2021/22	2022/23	2023/24	Total
CapEx	0.000	(5.369)	(1.375)	(0.918)	0.000	0.000	0.000	(7.662)
OpEx	0.000	0.372	0.074	0.023	0.000	0.000	0.000	0.469
Removal	0.000	(2.607)	(0.727)	(0.507)	0.000	0.000	0.000	(3.841)
Total Cost in Bus. Plan	0.000	(7.604)	(2.028)	(1.402)	0.000	0.000	0.000	(11.034)

Project Costs Per Business Plan – Distribution

		Current Planning Horizon						
	Prior Yrs	Yr. 1	Yr. 2	Yr. 3	Yr. 4	Yr. 5	Yr. 6 +	
$M	(Actual)	2018/19	2019/20	2020/21	2021/22	2022/23	2023/24	Total
CapEx	3.266	8.800	9.627	1.104	0.000	0.000	0.000	22.797
OpEx	0.000	0.000	0.000	0.251	0.000	0.000	0.000	0.251
Removal	0.001	0.000	0.000	0.251	0.000	0.000	0.000	0.252
Total Cost in Bus. Plan	3.267	8.800	9.627	1.606	0.000	0.000	0.000	23.300

Variance - Distribution (Business Plan-Project Estimate)

		Current Planning Horizon						
	Prior Yrs	Yr. 1	Yr. 2	Yr. 3	Yr. 4	Yr. 5	Yr. 6 +	
$M	(Actual)	2018/19	2019/20	2020/21	2021/22	2022/23	2023/24	Total
CapEx	0.000	(0.041)	3.788	(2.303)	0.000	0.000	0.000	1.444
OpEx	0.000	0.000	0.000	0.251	0.000	0.000	0.000	0.251
Removal	0.000	0.000	(0.119)	(0.224)	0.000	0.000	0.000	(0.343)
Total Cost in Bus. Plan	0.000	(0.041)	3.669	(2.276)	0.000	0.000	0.000	1.352

3.11.3 Cost Assumptions

The costs presented in this sanction paper are based on the following assumptions:

- C041183 – Cost is based on the Project Grade Estimate developed on 7/17/2018.
- C041184 – Cost is based on the Project Grade Estimate developed on 9/18/2018.
- C041185 – Cost is based on the Project Grade Estimate developed on 7/17/2018.
- CD00656 – Cost is based on the Project Grade Estimate developed on 7/17/2018.

The accuracy level of estimate for each project is identified in table 3.11.1.

3.11.4 Net Present Value / Cost Benefit Analysis

This is not a NPV project.

3.11.4.1 ***PV Summary Table***

N/A

3.11.4.2 ***NPV Assumptions and Calculations***

N/A

3.11.5 Additional Impacts

No additional impacts have been identified at this time.

3.12 *Statements of Support*

3.12.1 Supporters

The supporters listed have aligned their part of the business to support the project.

Department	Individual	Responsibilities
Investment Planning	Glen DiConza Karen McColgan	Endorses relative to 5-year business plan or emergent work
Resource Planning	Mark Phillips	Endorses construction resources, cost estimate, schedule, and portfolio alignment
Asset Management / Planning	Brian Hayduk Al Labarre	Endorses scope, estimate, and schedule with the company's goals, strategies, and objectives
Engineering and Design	Mark Larrabee Natasha Deschene Leonard G. Swanson	Endorses scope, design, conformance with design standards
Project Management	Dave Arthur Sara Migdal	Endorses resources, cost estimate, schedule
Electric Project Estimation	John Duffy	Endorses Cost Estimate

3.12.2 Reviewers

The reviewers have provided feedback on the content/language of the paper.

Function	Individual
Finance	Felicia Midkiff Andrew Byrne
Regulatory	Ed Turieo Michael Artuso
Jurisdictional Delegate(s)	Patricia Easterly Terron Hill
Procurement	Diego Chevere
Control Centers (CC)	Michael Gallagher Philip Lavalle

4 Appendices

4.1 Sanction Request Breakdown by Project

N/A

4.2 Other Appendices

N/A

4.3 NPV Summary

N/A

4.4 Customer Outreach Plan

National Grid has hired a consultant to develop and implement a comprehensive public outreach plan for all of proposed projects on Aquidneck Island. This outreach effort is part of a comprehensive and proactive public outreach process to establish and maintain communications with stakeholders (e.g., project abutters, residents, businesses, federal, state and local officials, and community groups).

This process will include opportunities for public education and communication regarding the need for the project, the permitting and siting processes, the detailed construction plans, the dissemination of construction updates and outreach prior to and during construction, and follow-up outreach after project completion. The process is designed to engage the community in a two-way dialogue, facilitate transparency throughout the project, foster public participation, and solicit feedback from stakeholders.

This document has been redacted for Critical Energy/Electric Infrastructure Information (CEII). 1/26/2018
REDACTED

US Sanction Paper

nationalgrid

Title:	Newport Area Transmission Reinforcements	**Sanction Paper #:**	USCC-14-261 v2
Project #:	C041183, C041184, C041185, CD00656	**Sanction Type:**	Partial Sanction
Operating Company:	The Narragansett Electric Co.	**Date of Request:**	01/22/2018
Author:	Endrit Fiku	**Sponsor:**	Carol A. Sedewitz VP Electric Asset Management
Utility Service:	Electricity T&D	**Project Manager:**	Endrit Fiku

1 Executive Summary

1.1 Sanctioning Summary

This paper requests partial sanction of C041183, C041184, C041185 and CD00656 in the amount of $51.822M with a tolerance of +/- 10% for the purposes of full implementation of C041183, C041185 and CD00656; and final engineering, long lead materials procurement and foundation construction of C041184.

Note that Project No. CD00656 has been moved from sanction paper USSC-14-262 into this paper, since both the transmission and distribution components of the Jepson Substation will be implemented in parallel.

This sanction amount is $51.822M broken down into:

$48.442M Capex
$0.480M Opex
$2.900M Removal

NOTE the potential investment of $71.705M with a tolerance of +/- 25%, contingent upon submittal and approval of a Project Sanction paper following completion of activities listed above.

1.2 Project Summary

Transmission Planning evaluated the thermal and voltage performance of the transmission system local to Aquidneck Island in Rhode Island, which consists of the [redacted]

The April 2015 Newport Area (Aquidneck Island) Transmission Solution Study documented potential violations of the transmission planning standards under certain contingencies [redacted]

or certain equipment at the Dexter or Jepson Substations, were to malfunction or to be taken out of service, other equipment may overload.

The study identified the following thermal concerns:

- Dexter Substation: [redacted]
- 61 and 62 lines: For loss of [redacted], the remaining line overloads.
- Jepson Substation: Breaker failures of 3764 and 3765 opens the [redacted] ring, and forces the flow to go through the remaining path that connects the load serving transformers and the 63 line supplying [redacted] and Gate 2 Substation. [redacted]

The contingency thermal overloads described above occur at existing peak load levels or fractions thereof.

At present, there are asset condition issues at the Jepson Substation and environmental concerns, as this station is entirely within the Zone A Watershed Protection Overlay.

To address the reliability, asset condition and environmental issues, the recommended plan is to: [redacted]

1.3 Summary of Projects

Project Number	Project Type (Elec only)	Project Title	Estimate Amount ($M)
C041183	T-Sub	Jepson [redacted]	19.474
C041184	T-Line	Line 61/62 Conversion	25.883
C041185	T-Sub	Dexter [redacted] Station	5.476
CD00656	D-Sub	Jepson Substation	20.872
		Total	71.705

1.4 Associated Projects

Project Number	Project Title	Estimate Amount ($M)
C015158	NEWPORT SUBSTATION (D-SUB)	10.425
C024159	NEWPORT [redacted] LINE 63 (D-LINE)	2.165
C028628	NEWPORT SUBTRANS & DIST CONVERSION	18.926
C054052	NO AQUIDNECK RETIREMENT (D-SUB)	0.310
C054054	JEPSON SUBSTATION (D-LINE)	6.967
C058310	HARRISON SUB IMPROVEMENTS (D-SUB)	0.320
C058401	MERTON SUB IMPROVEMENTS (D-SUB)	0.330
C058404	KINGSTON SUB IMPROVEMENTS (D-SUB)	0.595
C058407	SOUTH AQUIDNECK RETIREMENT (D-SUB)	0.310
CD00649	GATE 2 SUBSTATION (D-SUB)	2.569
CD00651	BAILEY BROOK RETIREMENT (D-SUB)	0.448
CD00652	VERNON RETIREMENT (D-SUB)	0.310
	Total	43.675

Note: These associated projects are part of the distribution system reinforcements on Aquidneck Island. Besides addressing the concerns on the distribution system, these projects help address the voltage concerns observed on the transmission study. These associated projects are part of a separate sanction USSC-14-262.

1.5 Prior Sanctioning History

Date	Governance Body	Sanctioned Amount	Potential Project Investment	Paper Title	Sanction Type	Tolerance
12/10/2014	**USSC**	**$8.500M**	**$39.131M***	**Newport Area Transmission Reinforcements**	**Partial**	**+50/-25%**

* Note: Project No. CD00656 has been moved from sanction paper USSC-14-262 into this paper, since both the transmission and distribution components of the Jepson Substation will be implemented in parallel. Therefore, the total value of the potential project investment under this paper has increased by $20.272M. The original potential project investment of $39.131M as listed in the Prior Sanction History table includes only the transmission componenets of the Jepson Substation.

1.6 Next Planned Sanction Review

Date (Month/Year)	Purpose of Sanction Review
August 2018	Project Sanction

1.7 Category

Category	Reference to Mandate, Policy, NPV, or Other
○ Mandatory ◉ Policy- Driven ○ Justified NPV ○ Other	Comply with applicable reliability standards such as, North American Electric Reliability Corporation (NERC) planning standards, Northeast Power Coordinating Council (NPCC) criteria, ISO-New England planning procedures and National Grid's Transmission Planning Guide (TGP28).

1.8 Asset Management Risk Score

Asset Management Risk Score: 49

Primary Risk Score Driver: (Policy Driven Projects Only)

◉ Reliability ○ Environment ○ Health & Safety ○ Not Policy Driven

1.9 Complexity Level

◉ High Complexity ○ Medium Complexity ○ Low Complexity ○ N/A

Complexity Score: 32

1.10 Process Hazard Assessment

A Process Hazard Assessment (PHA) is required for this project:

◉ Yes ○ No

1.11 Business Plan

Business Plan Name & Period	Project included in approved Business Plan?	Over / Under Business Plan	Project Cost relative to approved Business Plan ($)
FY18 - 22 NE Distribution & Transmission Capital Plan	◉ Yes ○ No	◉ Over ○ Under ○ NA	$4.409M

1.12 If cost > approved Business Plan how will this be funded?

Re-allocation of funds within the portfolio has been managed and approved by Resource Planning to meet jurisdictional budgetary, statutory and regulatory requirements.

1.13 Current Planning Horizon

		Current Planning Horizon						
		Yr. 1	Yr. 2	Yr. 3	Yr. 4	Yr. 5	Yr. 6 +	
$M	Prior Yrs	2017/18	2018/19	2019/20	2020/21	2021/22	2022/23	Total
CapEx	5.290	10.834	30.767	14.198	5.309	0.000	0.000	66.398
OpEx	0.015	0.000	0.372	0.376	0.184	0.000	0.000	0.947
Removal	0.035	0.089	1.344	0.781	2.111	0.000	0.000	4.360
CIAC/Reimbursement	0.000	0.000	0.000	0.000	0.000	0.000	0.000	0.000
Total	5.340	10.923	32.483	15.355	7.604	0.000	0.000	71.705

1.14 Key Milestones

Milestone	Target Date: (Month/Year)
Partial Sanction	December 2014
Partial Sanction	January 2018
Start Final Engineering - Substation	January 2018
Engineering Design Complete – T-Line Foundations	February 2018
Construction Start – T-Line Foundations	May 2018
Construction Start – Substation	June 2018
Engineering Design Complete – T-Line Structure/Wire	June 2018
Project Sanction	August 2018
Construction Start – T-Line Structure/Wire	September 2018
Submit Facility Ratings to ISO-NE – T-Line	November 2018
Ready For Load – T-Line	May 2019
Engineering Design Complete - Substation	May 2019

Milestone	Target Date: (Month/Year)
Submit Facility Ratings to ISO-NE - Substation	September 2019
Ready For Load – Jepson Sub	March 2020
Ready For Load – Dexter Sub	September 2020
Construction Complete – Substation	September 2020
Construction Complete – T-Line	November 2020
Project Closure Sanction	March 2021

1.15 Resources, Operations and Procurement

Resource Sourcing			
Engineering & Design Resources to be provided	☑ Internal		☑ Contractor
Construction/Implementation Resources to be provided	☑ Internal		☑ Contractor
Resource Delivery			
Availability of internal resources to deliver project:	○ Red	○ Amber	◉ Green
Availability of external resources to deliver project:	○ Red	○ Amber	◉ Green
Operational Impact			
Outage impact on network system:	○ Red	○ Amber	◉ Green
Procurement Impact			
Procurement impact on network system:	○ Red	○ Amber	◉ Green

1.16 Key Issues (include mitigation of Red or Amber Resources)

1	Outages are restricted to the spring and fall seasons. Construction sequence and planning is critical. Numerous outages will be required on the transmission and distribution lines. Coordination of outages with other planned projects in the Southern Massachusetts and Rhode Island region will be critical to timely delivery of the project.
2	Substation and transmission line work is contracted to different construction contractors. Coordination of the construction sequences and outages will be critical in order to avoid construction down time.
3	Transmission line work over and under distribution lines and road crossings is required. A PHA process will be put in place to identify and analyze the significance of hazardous situation associated with an activity to aid management in making critical safety decisions.
4	A major public outreach effort is required for communities impacted by the transmission line, substation, and distribution line construction activities.

1.17 Climate Change

Contribution to National Grid's 2050 80% emissions reduction target:	◉ Neutral	○ Positive	○ Negative
Impact on adaptability of network for future climate change:	◉ Neutral	○ Positive	○ Negative

1.18 List References

1	Newport Area (Aquidneck Island) Transmission Needs/Solution Study Report, April 2015. Regional Project System Identification: 1669, 1670 and 1671.
2	Asset Condition Report Addendum – Jepson Sub #37, October 2013
3	Newport Area Supply and Distribution Study, May 2007

2 Decisions

The Senior Executive Sanctioning Committee (SESC) at a meeting held on 01/22/2018:

(a) APPROVED the investment of $51.822M and a tolerance of +/- 10 % for the purposes of full implementation of C041183, C041185 and CD00656; and final engineering, long lead materials procurement and foundation construction of C041184.

(b) NOTED the potential investment of $71.705M and a tolerance of +/- 25 %, contingent upon submittal and approval of a Project Sanction paper following completion of final engineering and design.

(c) NOTED that Endrit Fiku has the approved financial delegation to undertake the activities stated in (a).

Signature.....Date..1/24/18

Margaret Smyth

US Chief Financial Officer

Chair, Senior Executive Sanctioning Committee

3 Sanction Paper Detail

Title:	Newport Area Transmission Reinforcements	**Sanction Paper #:**	USCC-14-261 v2
Project #:	C041183, C041184, C041185, CD00656	**Sanction Type:**	Partial Sanction
Operating Company:	The Narragansett Electric Co.	**Date of Request:**	01/22/2018
Author:	Endrit Fiku	**Sponsor:**	Carol A. Sedewitz VP Electric Asset Management
Utility Service:	Electricity T&D	**Project Manager:**	Endrit Fiku

3.1 Background

The Southeastern Massachusetts and Rhode Island (SEMA-RI) Area Needs Assessment (N-1) led by ISO-New England were presented to the Planning Advisory Committee (PAC) on February 19, 2014. The study identified immediate potential thermal and voltage issues in the Somerset Area including the transmission facilities between the Dexter and Bell Rock substations.

Transmission Planning confirmed the thermal and voltage performance of the transmission system local to Aquidneck Island in Rhode Island, which consists of the [redacted]

The transmission study identified low voltage concerns for loss of the 115kV lines M13 or L14 that supply the Dexter Substation. The primary driver of low voltage is excessive voltage drop across the transmission system when a single line is forced to carry the entire Somerset/Bello Rock area and the Aquidneck Island load following the loss of the other line. This voltage concern is being addressed by the SEMA-RI suite of projects.

The study indentified the following thermal concerns:

- At the Dexter Substation: [redacted]
- 61 and 62 lines: For loss of either [redacted] line, the remaining line overloads.
- At the Jepson Substation: Breaker failures 3764 and 3765 opens the [redacted] ring and forces the flow to go through the remaining path that connects the load serving transformers and the 63 line supplying [redacted] and Gate 2. [redacted]

The Jepson Substation is the main point of transmission supply into the Aquidneck Island distribution [redacted] The Jespons Substation contains numerous issues with poor asset condition issues and environmental concerns, as this substation is located entirely within the Zone A Watershed Protection Overlay.

Project No. CD00656 (Jepson D-Sub) has been moved from sanction paper USSC-14-262 into this paper, since the distribution component of the Jepson Substation will be implemented in parallel with the transmission component (Project No. C041183).

3.2 Drivers

Based on the critical load level analysis documented on the April 2015 Newport Area (Aquidneck Island) Transmission Solution Study Report, the need to resolve the thermal issues on the [redacted] lines 61 and 62, the 69 kV ring at the Jepson Substation and the [redacted] transformers at Dexter Substation is immediate.

Besides the Jepson Substation being entirely within the Zone A Watershed Protection Overlay, the [redacted] equipment suffer from issues related to poor asset condition. Below is a summary of the asset condition issues at the Jepson Substation:

[redacted]

Jepson 23 kV Station:

- Predominantly 1950 vintage equipment. All 23 kV breakers are obsolete.
- 23 kV bus is supported by pin type insulators. This design is unreliable and obsolete. The bus no longer meets current clearance and work space requirements.
- The 23 kV bus voltage is regulated by a Load Tap Changer (LTC) control scheme that often produces voltage problems and needs to be disabled and reset a few times a year. This scheme should be retired or replaced.
- Three power transformers in the yard are vintage 1950's and have no oil containment.

Jepson 4.16 kV Station:

- 1960s vintage 23/4.16 kV station with mostly original equipment.
- Obsolete design with single set of regulators supplying both feeders
- Entire bay no longer meets current clearances to energized parts.
- No Energy Management System (EMS) and both transformer and circuit recloser testing that indicates significant equipment deterioration is occurring.

A portion of the Jepson Substation floods in the spring. On numerous occasions, the Jepson 13.8 kV station has been in the flooded area.

[redacted]

3.3 Project Description

To address the identified concerns, the recommended plan is to:

[redacted]

3.4 Benefits Summary

The recommended plan will address the thermal, poor asset condition and load at risk concerns. It will move the existing Jepson Substation out of the Zone A watershed Protection Overlay.

This plan results in more robust system performance and provides additional margin for future load growth, which is superior to other alternatives.

3.5 Business and Customer Issues

The success of this project is depended upon full implementation of the projects associated with the distribution system reinforcements on Aquidneck Island. Besides addressing the concerns on the distribution system, these projects help address the thermal concerns observed on the transmission study. These associated projects are part of a separate sanction (USSC-14-262).

3.6 Alternatives

Alternative 1: Reinforce the Dexter Substation, Reconductor the 61/62 lines and Rebuild the Jepson Substation

Dexter Substation:

Jepson Substation:

61/62 69 kV lines:
Reconductor the 61 and 62 lines with 795 Aluminium Conductor Steel Supported (ACSS) conductor and replace the double circuit structures with 69 kV designed structures.

Compared to the chose option, this alternative would require significant upgrades and additions at the Dexter Substation. This alternative moves the Jepson Substation out of the Zone A Watershed Protection Overlay, and it addresses the identified thermal issues similar to chosen plan, but it will not work beyond a load growth margin of 9%. Therefore, this option is no recommended.

Alternative 2: Non-Wires Alternative

An evaluation was performed for a Non-Wires Alternative (NWA) that would involve adding sufficient demand-side resources (energy efficiency, demand response, and distributed generation) at strategic locations on Aquidneck Island to defer or eliminate the need for the Project.

The feasibility of this approach was assessed consistent with the criteria set forth in Section 2.1.D of the System Reliability Procurement Standards (SRP Standards), adopted by the Rhode Island Public Utilities Commission (RIPUC) on June 10, 2014.

Given that proposed upgrade of the Jepson Substation is driven by asset condition issues, this upgrade will fail criterion 1 of the SRP Standards. In addition, the possible thermal overloads at the Jepson Substation [redacted] ring bus which cannot be addressed through load reductions less than 20 percent of the relevant peak load in the area (criterion 3 of the SRP Standards), the Company concluded that there is no NWA for the Jepson Substation portion of the Project.

The Company identified load reductions that would be required on Aquidneck Island to address the possible thermal overloads driving the need to upgrade the 61 and 62 lines. In making these calculations, the Company assumed the conductor clearance limitations on the 61 and 62 lines would be removed. Based on the load levels analyzed as part of the Transmission Solution Study, the Company determined the following:

- In 2014, 23 MW of load reductions at the Gate II and [redacted] would be needed to address the possible N-1 contingency thermal overloads on the 61 and 62 lines. Peak load for this area is approximately 63 MW. The required load reduction therefore is approximately 36% of the relevant peak load.
- In 2022, 24 MW of load reductions at the Gate II, [redacted] would be needed to address the potential N-1 contingency thermal overloads on the 61 and 62 Lines. Peak load for this area was projected to be approximately 75 MW. The required load reduction is therefore approximately 32% of the relevant peak load.

A NWA for the 61 and 62 Line Upgrades clearly would fail criterion 3 of the SRP Standards. In addition, the construction start for the 61 and 62 Line Upgrades is less than 36 months called for in criterion (4) of the SRP Standards. Therefore, the Company concluded that an NWA for this portion of the project would not be feasible.

3.7 Safety, Environmental and Project Planning Issues

The Company will develop a health and safety plan and follow all National Grid safety and environmental rules.

Safety Issues:

- Outages will be taken to allow for work to be performed. However, work must be performed in proximity to live equipment.
- A thorough safety brief shall be conducted and emphasized via daily tailboard meetings. Proper personal protective equipment (PPE) shall be worn at all times.
- Grounding and tagging all isolation points will be performed to ensure equipment is de-energized before work can begin. Safety observers will be used as appropriate.
- Transmission line work over and under distribution lines and road crossings is required. A PHA process will be put in place to identify and analyze the significance of a hazardous situation associated with an activity to aid management in making critical safety decisions.

Environmental Issues:

- In-situ soil pre-characterization will be performed prior to removal or disposal of any soil excavated during construction.

Project Planning Issues:

- Outages are restricted to the spring and fall seasons. Construction sequence and planning is critical. Numerous outages will be required on the transmission and distribution system. Coordination of outages with other planned projects in the Southern Massachusetts and Rhode Island region will be critical to timely delivery of the project.
- Substation and transmission line work is contracted to different construction contractors. Coordination of the construction sequences and outages will be critical in order to avoid construction down time.
- A major public outreach effort is required for communities impacted by the transmission line, substation, and distribution line construction activities.

3.8 Execution Risk Appraisal

Number	Detailed Description of Risk / Opportunity	Probability	Impact		Score		Strategy	Pre-Trigger Mitigation Plan	Residual Risk	Post Trigger Mitigation Plan
			Cost	Schedule	Cost	Schedule				
1	If National Grid cancels an outage that was included in the contractors schedule then National Grid is responsible for any schedule impact and any schedule recovery costs directly attributable to the cancelled Outage (only if the outage was cancelled by National Grid and not by others)	3	3	4	9	12	Avoid	Schedule Outages during the Fall and Spring as far from peak demand seasons as possible- i.e. avoid scheduling on the shoulders of Spring and Fall seasons. Hold regular coordination meetings with other projects in the area (i.e. SEMA RI project). Request missed outage contingency plans from finalist contractors during Q&A – redistribution of work through flexible/contingency scheduling to use available time and resources effectively.	N/A	Implement missed outage contigency plan as agreed with the contractor during the RFP event
2	Both Dexter and Jepson substations may have building and/or soil contaminants. Risks include unforeseen types or levels of contamination that would result in: a) greater re-mediation expense than budgeted; b) impacts to the [redacted] construction schedule; c) additional construction labor to work around contaminants; and/or assist with segregation of contaminants; d) need for additional Hazmat Training for contractor personnel; e) possible stand-by time for [redacted] if crews are unable to access portions or all of work-site; f) possible furlough of crews with de-mobilization and re-mobilization to allow contaminants to be removed.	3	4	2	12	6	Accept	National Grid will test the soils and/or any material suspected to be containing hazardous material. Advise contractors of the potential hazardous material risks and ask for adaptive scheduling that will allow more flexibility in crew assignments while the approved environmental management company is removing contaminants.	N/A	If contaminated materials are found, National Grid will coordinate the abatment, transporation and disposal of hazardous waste in a timely manner so that it does not impact the contractors schedule. If the contamination is more than estimated , National Grid may also be responsible for additional effort on the contractors part to a) work around contaminants and b) cease work and possibly demobilize until contaminants are removed.
3	Delays due to transmission line cutovers into the Jepson Sub. National Grid's Transmission Line Services (TLS) will rebuild and upgrade [redacted]	3	3	4	9	12	Avoid	Schedule re-occuring project meeting status between TLS and substation contractor to asses project resources and status	N/A	N/A
4	Relocation of unforseen utilities such as electric, gas, or water lines on the each of the project sites.	3	3	1	9	3	Accept	The contractor scope of work includes detailed surveying of all work sites that require excavating. The purpose of the survey is to discover any unforseen subsurface conflicts prior to final engineering	N/A	If evidence of a conflict/manmade obstruction does exist for which a no cost (in-scope) engineering design or work around solution cannot be developed, then National Grid expects the contractor to provide a one-time lump-sum adjustment (documented as an itemized fixed price change-order) to remove or relocate the identified conflict(s)/manmade obstruction(s)

Note: This table is an extract from the transmission and distribution risk register that has been developed for the overall transmission and distribution projects in Aquidneck Island.

3.9 Permitting

Permit Name	Probability Required (Certain/ Likely/ Unlikely)	Duration To Acquire Permit	Status (Complete/ In Progress Not Applied For)	Estimated Completion Date
RIHPHC (RI Historic Preservation Office & Tribal Historic Preservation Consultation under Section 106 of the National Historic Preservation Act	Required	3 months	Complete	01/2016
RI Department of Environmental Management (RIDEM) Freshwater Wetlands Permit	Required	6 months	Complete	05/2017
RI Pollutant Discharge Elemination System (RIPDES) - Storm Water Discharge Associated with Construction Activities	Required	6 months	Complete	05/2017
Water Quality Certification Under Section 401 of the Clean Water Act	Required	6 months	Complete	05/2017
Army Corp of Engineers (ACOE) Section 404 Permit	Required	12 months	Complete	05/2017
RI Energy Facility Siting Board (EFSB) License	Required	12 months	Complete	06/2017

Local Planning & Zonning Boards Approval – Special Variances	Required	12 months	Complete	06/2017

3.10 Investment Recovery

3.10.1 Investment Recovery and Regulatory Implications

C041183 is 69% Pool Transmission Facility (PTF), C041184 is 100% PTF and C041185 is 40% PTF. CD00656 is a Distribution project.

Investment recovery will be through standard rate recovery mechanisms approved by appropriate regulatory agencies.

3.10.2 Customer Impact

This project results in an indicative first full year revenue requirement when the asset is placed in service equal to approximately $11.933M. This is indicative only. Recovery is through the following: Regional Service (RNS) of $6.438M; Local Network Service (LNS) of $1.394M; and distribution rates of $4.101M, depending upon the timing of the next rate case and/or the timing of the next filing in which the project is included in rate base.

3.10.3 CIAC / Reimbursement

N/A

3.11 Financial Impact to National Grid

3.11.1 Cost Summary Table

Project Number	Project Title	Project Estimate Level (%)	Spend ($M)	Prior Yrs	Current Planning Horizon Yr. 1 2017/18	Yr. 2 2018/19	Yr. 3 2019/20	Yr. 4 2020/21	Yr. 5 2021/22	Yr. 6 + 2022/23	Total
C041183	Jepson 115kV	Est Lvl (+/- 10%)	CapEx	0.988	5.576	6.793	2.852	1.668	0.000	0.000	17.877
			OpEx	0.014	0.000	0.000	0.222	0.115	0.000	0.000	0.351
			Removal	0.004	0.054	0.000	0.095	1.093	0.000	0.000	1.246
			Total	1.006	5.630	6.793	3.169	2.876	0.000	0.000	19.474
C041184	Line 61/62 Conversion	Est Lvl (+/- 25%)	CapEx	3.578	2.021	14.634	2.896	0.827	0.000	0.000	23.956
			OpEx	0.000	0.000	0.372	0.074	0.021	0.000	0.000	0.467
			Removal	0.000	0.000	1.164	0.230	0.066	0.000	0.000	1.460
			Total	3.578	2.021	16.170	3.200	0.914	0.000	0.000	25.883
C041185	Dexter 115kV Station	Est Lvl (+/- 10%)	CapEx	0.543	1.749	0.540	0.690	0.988	0.000	0.000	4.510
			OpEx	0.001	0.000	0.000	0.000	0.000	0.000	0.000	0.001
			Removal	0.030	0.035	0.180	0.296	0.424	0.000	0.000	0.965
			Total	0.574	1.784	0.720	0.986	1.412	0.000	0.000	5.476
CD00656	Jepson Substation	Est Lvl (+/- 10%)	CapEx	0.181	1.488	8.800	7.760	1.826	0.000	0.000	20.055
			OpEx	0.000	0.000	0.000	0.080	0.048	0.000	0.000	0.128
			Removal	0.001	0.000	0.000	0.160	0.528	0.000	0.000	0.689
			Total	0.182	1.488	8.800	8.000	2.402	0.000	0.000	20.872
Total Project Sanction			CapEx	5.290	10.834	30.767	14.198	5.309	0.000	0.000	66.398
			OpEx	0.015	0.000	0.372	0.376	0.184	0.000	0.000	0.947
			Removal	0.035	0.089	1.344	0.781	2.111	0.000	0.000	4.360
			Total	5.340	10.923	32.483	15.355	7.604	0.000	0.000	71.705

Note that Project No. CD00656 has been moved from sanction paper USSC-14-262 into this paper, since the distribution component of the Jepson Substation will be implemented in parallel with the transmission component (Project No. C041183).

It is expected that the plant will be capitalized at the ready for load date, unless otherwise specified.

3.11.2 Project Budget Summary Table

Project Costs Per Business Plan - Transmission

$M	Prior Yrs (Actual)	Current Planning Horizon Yr. 1 2017/18	Yr. 2 2018/19	Yr. 3 2019/20	Yr. 4 2020/21	Yr. 5 2021/22	Yr. 6 + 2022/23	Total
CapEx	5.109	1.389	17.856	13.506	6.170	0.000	0.000	44.030
OpEx	0.015	0.000	0.170	0.207	0.122	0.000	0.000	0.514
Removal	0.034	0.065	0.924	1.262	0.383	0.000	0.000	2.668
Total Cost in Bus. Plan	5.158	1.454	18.950	14.975	6.675	0.000	0.000	47.212

Variance – Transmission (Business Plan-Project Estimate)

		Current Planning Horizon						
	Prior Yrs	Yr. 1	Yr. 2	Yr. 3	Yr. 4	Yr. 5	Yr. 6 +	
$M	(Actual)	2017/18	2018/19	2019/20	2020/21	2021/22	2022/23	Total
CapEx	0.000	(7.957)	(4.111)	7.068	2.687	0.000	0.000	(2.313)
OpEx	0.000	0.000	(0.202)	(0.089)	(0.014)	0.000	0.000	(0.305)
Removal	0.000	(0.024)	(0.420)	0.641	(1.200)	0.000	0.000	(1.003)
Total Cost in Bus. Plan	0.000	(7.981)	(4.733)	7.620	1.473	0.000	0.000	(3.621)

Project Costs Per Business Plan – Distribution

		Current Planning Horizon						
	Prior Yrs	Yr. 1	Yr. 2	Yr. 3	Yr. 4	Yr. 5	Yr. 6 +	
$M	(Actual)	0	0	0	0	0	0	Total
CapEx	0.181	1.264	8.050	7.240	2.400	0.000	0.000	19.135
OpEx	0.000	0.025	0.161	0.145	0.048	0.000	0.000	0.379
Removal	0.001	0.038	0.242	0.217	0.072	0.000	0.000	0.570
Total Cost in Bus. Plan	0.182	1.327	8.453	7.602	2.520	0.000	0.000	20.084

Variance – Distribution (Business Plan-Project Estimate)

		Current Planning Horizon						
	Prior Yrs	Yr. 1	Yr. 2	Yr. 3	Yr. 4	Yr. 5	Yr. 6 +	
$M	(Actual)	0	0	0	0	0	0	Total
CapEx	0.000	(0.224)	(0.750)	(0.520)	0.574	0.000	0.000	(0.920)
OpEx	0.000	0.025	0.161	0.065	0.000	0.000	0.000	0.251
Removal	0.000	0.038	0.242	0.057	(0.456)	0.000	0.000	(0.119)
Total Cost in Bus. Plan	0.000	(0.161)	(0.347)	(0.398)	0.118	0.000	0.000	(0.788)

3.11.3 Cost Assumptions

The costs presented in this sanction paper are based on the following assumptions:

- C041183 – Cost is based on the Project Grade Estimate developed on 12/14/2017.
- C041184 – Cost is based on the Planning Grade Estimate developed on 10/03/2016.
- C041185 – Cost is based on the Project Grade Estimate developed on 12/14/2017.
- CD00656 – Cost is based on the Project Grade Estimate developed on 12/14/2017.

The accuracy level of estimate for each project is identified in table 3.11.1.

3.11.4 Net Present Value / Cost Benefit Analysis

This is not a NPV project.

3.11.4.1 NPV Summary Table

N/A

3.11.4.2 NPV Assumptions and Calculations

N/A

3.11.5 Additional Impacts

No additional impacts have been identified at this time.

3.12 Statements of Support

3.12.1 Supporters

The supporters listed have aligned their part of the business to support the project.

Department	Individual	Responsibilities
Investment Planning	Glen DiConza Karen McColgan	Endorses relative to 5-year business plan or emergent work
Resource Planning	Mark Phillips	Endorses construction resources, cost estimate, schedule, and portfolio alignment
Asset Management/Planning	Brian Hayduk	Endorses scope, estimate, and schedule with the company's goals, strategies, and objectives
Engineering and Design	Mark Larrabee Natasha Deschene Leonard G. Swanson	Endorses scope, design, conformance with design standards
Project Management	Marc Quesnel	Endorses resources, cost estimate, schedule
Electric Project Estimation	John Duffy	Endorses Cost Estimate

3.12.2 Reviewers

The reviewers have provided feedback on the content/language of the paper.

Function	Individual
Finance	Felicia Midkiff Andrew Byrne
Regulatory	Renee Gurry

	Michael Artuso
Jurisdictional Delegate	Sonny Anand Terron Hill
Procurement	Steve DeRosa
Control Centers (CC)	Micheal Gallagher Philip Lavallee

4 Appendices

4.1 Sanction Request Breakdown by Project

$M	C041183	C041184	C041185	CD00656	Total
CapEx	17.877	6.000	4.510	20.055	48.442
OpEx	0.351	0.000	0.001	0.128	0.480
Removal	1.246	0.000	0.965	0.689	2.900
Total	19.474	6.000	5.476	20.872	51.822

4.2 Customer Outreach Plan

National Grid has hired a consultant to develop and implement a comprehensive public outreach plan for all of proposed projects on Aquidneck Island. This outreach effort is part of a comprehensive and proactive public outreach process to establish and maintain communications with stakeholders (e.g., project abutters, residents, businesses, federal, state and local officials, and community groups).

This process will include opportunities for public education and communication regarding the need for the project, the permitting and siting processes, the detailed construction plans, the dissemination of construction updates and outreach prior to and during construction, and follow-up outreach after project completion. The process is designed to engage the community in a two-way dialogue, facilitate transparency throughout the project, foster public participation, and solicit feedback from stakeholders.

Title:	Aquidneck Island	**Sanction Paper #:**	USSC-14-262 v3
Project #:	C015158, C024159, C028628, C054052, C054054, C058310, C058401, C058404, C058407, CD00649, CD00651, CD00652	**Sanction Type:**	Partial Sanction
Operating Company:	The Narragansett Electric Co.	**Date of Request:**	11/26/2018
Author:	Michael Hughes	**Sponsor:**	Carol A. Sedewitz, VP Distribution Asset Management & Planning
Utility Service:	Electricity T&D	**Project Manager:**	Michael Hughes

1 Executive Summary

1.1 *Sanctioning Summary*

This paper requests partial sanction of (Project numbers listed above) in the amount of $31.174M with a tolerance of +/-10% for the purposes of Preliminary Engineering, Long Lead Materials, and initial construction activities.

This sanction amount is $31.174M broken down into:

$26.667M Capex
$1.641M Opex
$2.866M Removal

This project has undergone a Capital Efficiency Review with the following determination:

This project reflects mature designs and efficiencies that are now accepted as a standard. The sanction amount reflects these efficiency savings; however, there are no further incremental savings relative to the sanction amount.

NOTE the potential investment of $49.361M with a tolerance of +/- 25%, contingent upon submittal and approval of a Project Sanction paper following completion of final engineering.

1.2 *Project Summary*

This paper encompasses work at Newport Substation, associated Distribution Line Reconductoring and Conversions, Line 63 Reconfiguration, Jepson Substation Distribution Line reconfigurations, Upgrades of the distribution lines are part of the

overall distribution line upgrade for the Aquidneck Island Reliability project. Various Substation Improvements and retirements as outlined in the table below are also included in the project scope.

1.3 *Summary of Projects*

Project Number	Project Type (Elec only)	Project Title	Estimate Amount ($M)
C015158	D-Sub	Newport Sub	11.302
C024159	D-Line	Newport [redacted] Line 63	1.911
C028628	D-Line	Newport SubTran & Dist	24.246
C054052	D-Sub	N Aquidneck Retirement	0.330
C054054	D-Sub	Jepson Sub	6.632
C058310	D-Sub	Harrison Sub Improvement	0.326
C058401	D-Sub	Merton Sub Imporvements	0.387
C058404	D-Sub	Kingston Sub improvements	0.595
C058407	D-Sub	S Aquidneck Retirement	0.342
CD00649	D-Sub	Gate 2 Substation	2.525
CD00651	D-Sub	Bailey Brook Retirement	0.463
CD00652	D-Sub	Vernon Retirement	0.302
		Total	49.361

1.4 *Associated Projects*

Project Number	Project Title	Estimate Amount ($M)
C041183	Jepson [redacted]	19.520
C041184	Line 61 / 62 Conversion [redacted]	33.947
C041185	Dexter [redacted]	5.444
CD00656	Jepson Substation	21.948
	Total	80.859

1.5 *Prior Sanctioning History*

Date	Governance Body	Sanctioned Amount	Potential Project Investment	Sanction Type	Potential Investment Tolerance
2/10/16	USSC	$13.937M	$55.827M	Partial Sanction	-25% / + 50%
12/10/2014	USSC	$10.000M	$53.585M	Partial Sanction	+/-25%
11/09/2011	USSC	$15.000M	$42.00M	Partial	-25% +50%

12/03/2008	DCIG	$15.500M	$15.50M	Sanction	+/- 25%
04/02/2008	DCIG	$3.500M	$12.30M	Strategy	+/- 25%
10/11/2005	Power Plant	$1.000M	N.A.	Strategy	N.A.

1.6 *Next Planned Sanction Review*

Date (Month/Year)	Purpose of Sanction Review
May 2019	Project Sanction

1.7 *Category*

Category	Reference to Mandate, Policy, NPV, or Other
○ Mandatory ◉ Policy- Driven ○ Justified NPV ○ Other	National Grid USA Internal Strategy Document Distribution Planning Criteria Strategy Issue 1 – February 2011

1.8 *Asset Management Risk Score*

Asset Management Risk Score: 41

Primary Risk Score Driver: (Policy Driven Projects Only)

◉ Reliability ○ Environment ○ Health & Safety ○ Not Policy Driven

1.9 *Complexity Level*

◉ High Complexity ○ Medium Complexity ○ Low Complexity ○ N/A

Complexity Score: 33

1.10 *Process Hazard Assessment*

A Process Hazard Assessment (PHA) is required for this project:

◉ Yes ○ No

1.11 *Business Plan*

Business Plan Name & Period	Project included in approved Business Plan?	Over / Under Business Plan	Project Cost relative to approved Business Plan ($)
FY19-2023 New England Distribution Electric Capital Plan	◉ Yes ○ No	◉ Over ○ Under ○ NA	$3.998M

1.12 *If cost > approved Business Plan how will this be funded?*

Re-allocation of funds within the portfolio will be managed and approved by Resource Planning to meet jurictional budgetary, statutory and regulatory requirements.

1.13 *Current Planning Horizon*

		Current Planning Horizon						
		Yr. 1	Yr. 2	Yr. 3	Yr. 4	Yr. 5	Yr. 6 +	
$M	Prior Yrs	2018/19	2019/20	2020/21	2021/22	2022/23	2023/24	Total
CapEx	9.099	11.994	13.460	6.532	0.000	0.000	0.000	41.085
OpEx	0.447	0.480	0.943	0.707	0.000	0.000	0.000	2.577
Removal	1.140	0.690	1.695	1.642	0.532	0.000	0.000	5.699
CIAC/Reimbursement	0.000	0.000	0.000	0.000	0.000	0.000	0.000	0.000
Total	10.686	13.164	16.098	8.881	0.532	0.000	0.000	49.361

1.14 *Key Milestones*

Milestone	Target Date: (Month/Year)
Construction Start	September 2018
Ready for Load/Use [redacted]	January 2019
Project Sanction	April 2019
Construction Complete - CC	December 2020
Engineering Design Complete - EDC Station Retirements	October 2022
Gate D	August 2023
Gate E	October 2023

Milestone	Target Date: (Month/Year)
Project Closure Sanction	November 2023

1.15 *Resources, Operations and Procurement*

Resource Sourcing			
Engineering & Design Resources to be provided	☑ Internal		☑ Contractor
Construction/Implementation Resources to be provided	☑ Internal		☑ Contractor
Resource Delivery			
Availability of internal resources to deliver project:	○ Red	○ Amber	◉ Green
Availability of external resources to deliver project:	○ Red	○ Amber	◉ Green
Operational Impact			
Outage impact on network system:	○ Red	○ Amber	◉ Green
Procurement Impact			
Procurement impact on network system:	○ Red	○ Amber	◉ Green

1.16 *Key Issues (include mitigation of Red or Amber Resources)*

1	A major public outreach effort is ongoing for communities impacted by the substation construction and distribution line construction and conversion work.
2	Coordination with RI Department of Transportation (RIDOT) is ongoing to review compliance with the Americans with Disabilities Act (ADA) for new pole sets or pole replacements.
3	A traffic mitigation plan is needed for the distribution line construction and the proposed conversion work.

1.17 *Climate Change*

Contribution to National Grid's 2050 80% emissions reduction target:	◉ Neutral	○ Positive	○ Negative
Impact on adaptability of network for future climate change:	○ Neutral	◉ Positive	○ Negative

1.18 *List References*

1	Distribution Planning Criteria Strategy, Issue 1, February 2011
2	Conceptual Engineering Report, Newport Mall Substation, 7/20/11
3	Conceptual Engineering Report, Gate 2 Substation, 7/21/11
4	Conceptual Engineering Report, Jepson Substation, 7/22/11
5	Conceptual Engineering Report, Bailey Brook Substation, 7/25/11
6	Conceptual Engineering Report, Vernon Substation, 7/25/11
7	Newport Area Supply and Distribution Study, May 2007
8	Jepson Equipment Condition Assessment, February 2005

REDACTED

2 Decisions

The US Sanctioning Committee (SESC) at a meeting held on 11/26/18:

(a) APPROVED the investment of $31.174M and a tolerance of +/- 10 % for Preliminary Engineering, Long Lead Materials, and initial construction activities.

(b) NOTED the potential investment of $49.361M and a tolerance of +/- 25% contingent upon submittal and approval of a Project Sanction paper following completion of final engineering and design.

(c) NOTED that Michael Hughes has the approved financial delegation to undertake the activities stated in (a)

Signature..... Date..11/26/18

Margaret Smyth
US Chief Financial Officier
Chair, Senior Executive Sanctioning Committee

3 Sanction Paper Detail

Title:	Aquidneck Island	**Sanction Paper #:**	USSC-14-262 v3
Project #:	C015158, C024159, C028628, C054052, C054054, C058310, C058401, C058404, C058407, CD00649, CD00651, CD00652	**Sanction Type:**	Partial Sanction
Operating Company:	The Narragansett Electric Co.	**Date of Request:**	11/26/2018
Author:	Michael Hughes	**Sponsor:**	Carol A. Sedewitz, VP Distribution Asset Management & Planning
Utility Service:	Electricity T&D	**Project Manager:**	Michael Hughes

3.1 *Background*

The Newport Study Area encompasses the City of Newport and the towns of Middletown, Jamestown and Portsmouth (including Prudence Island). (See map on last page)shows a geographic map of the study area. The area has approximately 34,000 customers with a peak load of 146MW. Aquidneck Island has most of the load and peaks at 135MW, Jamestown peaks at 10MW and Prudence Island at 1MW.

[redacted]

[redacted] The remainder of the load is supplied by five (5) 23kV lines sourced from Jepson and Gate 2 substations which supply a 4.16kV distribution system with approximately 70MW of load. Twelve 23/4.16kV substations, ten located in the southern half of Aquidneck Island and two in Jamestown, supply this 4.16kV system.

Interruptions to the [redacted] electrical system resulting in significant customer outages occurred in the summer of 2003. One of the action items proposed by the Company to the Rhode Island Public Utilities Commission (RI PUC) was to conduct a planning study to identify and resolve electrical related issues in the area.

This area study was published in May 2007 and titled "The Newport Area Supply and Distribution Study". The Study identified an immediate need to build a new substation in the City of Newport to address both normal and contingency overloads. The study recommended construction of a new substation consisting of a single transformer supplying four (4) 13.8kV feeders. [redacted]

Construction of a new substation was contingent on the Company acquiring a parcel of land in Newport for this substation. The Company encountered significant challenges in acquiring a suitable land parcel which has impacted the in-service date of this substation. To address critical loading concerns in the City of Newport, the 2008 Annual Plan recommended accelerating some of the distribution construction identified in the 2007 study and recommended redistributing the area load on the supply and distribution systems to optimize all available capacity. All recommended investments are complete.

In 2011, the Company purchased a parcel of land in the City of Newport suitable for a new substation. The Company successfully worked with the city to amend the zoning ordinance to allow a substation to be built via a special permit. The substation site was encumbered by a lease that was released by the tenant in 2014. The substation construction is projected to start in the spring 2018 with an in-service date of fall 2019.

Transmission Planning has recently completed a review of the Aquidneck Island transmission supply system. This review identified various n-1 thermal overloads and voltage issues throughout Aquidneck Island. [redacted] The review also identified various asset condition, safety, and environmental concerns with Jepson substation.

[redacted] The station is located within the 100 year floodplain and directly adjacent to Sisson Pond and entirely within Zone A Watershed Protection Overlay. The station will be rebuilt on Company owned land in Middletown and outside the 100 year floodplain and the Zone A Watershed Protection Overlay. The existing station will be retired and all equipment removed.

[redacted] The existing 23/4.16kV station will be retired and load converted to the 13.8kV system. This is the most economical approach as opposed to building a new 23/4.16kV station in Middletown.

3.2 *Drivers*

The primary driver of this project is reliability. Aquidneck Island is supplied by a highly utilized supply and distribution system. It is increasingly challenging to supply load in southern Middletown and in the City of Newport. The Jepson 13.8kV system has been utilized to provide relief to the 23kV supply system and the 4.16kV distribution system. However, this 13.8kV system has been extended to its limits.

The 23kV supply system is a mixture of overhead and underground construction in Middletown and predominantly underground construction in Newport. The underground system consists mostly of paper and lead cable installed in 3-inch ducts. The 3-inch ducts are not suitable to house required solid dielectric cables, making upgrades to the 23kV supply system challenging and costly.

[redacted]

A number of 23/4.16kV stations in the area have asset condition, safety, environmental, and thermal concerns that need to be addressed. The recommendation is to retire these stations. This recommendation is part of a comprehensive solution developed for Aquidneck Island to address all concerns at least cost.

3.3 *Project Description*

Installed [redacted] feeder at Gate 2 substation in the City of Newport. This feeder addresses near-term thermal concerns in Newport until a new substation is built to provide the required long-term relief. All the work associated with this feeder is in-line with the long-term plan for the area resulting in no out of line expenditures. All recommended investments are complete.

Build a [redacted] substation in Newport on a parcel of land recently purchased for this purpose. The substation will consist of a single transformer supplying four (4) 13.8kV feeders. [redacted]

Build a new substation in Middletown (Jepson Substation) on Company owned land. The substation will consist of [redacted] six (6) feeders and [redacted] three (3) supply lines. [redacted] This

115kV station will be sanctioned separately as part of transmission reinforcements required on Aquidneck Island.

The 23kV supply system on Aquidneck Island needs relief. The most economical approach is to retire a number of 23/4.16kV stations and to convert the load to the 13.8kV system. This approach addresses asset condition, safety, environmental, thermal, and reliability concerns with these assets at least cost. This approach is part of a comprehensive solution that eliminates the need to install a new [redacted] line to Newport (an investment of $32M alone). This approach retires four 23/4.16kV stations which include:

- Vernon substation is a metal-clad station built in 1949. It has two transformers, TR231 installed in 1949 and TR232 installed in 1963. The metal-clad switchgear is obsolete and needs to be replaced to address safety and reliability concerns. Station breakers are obsolete and the TR231 needs to be replaced due to poor condition. The estimated cost to rebuild this station is $4.90M. The retirement of this station eliminates this $4.90M investment.

- Bailey Brook was built in 1941 on a small site with no room for expansion. It is located within local wetlands and adjacent to a brook that is the source of island water supply. Rebuilding the station outside the floodplain is not an economical approach because station is located in downtown Middletown and in a congested area. Locating and permitting a new site is not practical or economical. There is no economic or reliability benefit to keeping this station.

- South Aquidneck is a metal-clad station located within the flood plain. It has a single LTC transformer supplying 3-feeders. The station breakers are obsolete along with the station insulators and arresters. The estimated cost to address these concerns is $0.80M. However, this station cannot be offloaded due to lack of feeder ties and because the site is too small to install a mobile transformer. The LTC is an arcing in oil design which requires a higher level of maintenance.

- North Aquidneck is a metal-clad station with a single transformer supplying 3-feeders. The station has non-standard breakers and limited EMS. The LTC is an arcing in oil design which requires a higher level of maintenance. This station has similar offloading challenges to South Aquidneck substation making station maintenance very challenging.

The retirement of these 4.16kV station increases the reliability on the 13.8kV distribution system with increased feeder ties. The conversion of the 4.16kV load to 13.8kV also reduces line losses by approximately 90%.

3.4 *Benefits Summary*

The recommended plan is in-line with commitments made by the Company to state regulators. The plan is part of a comprehensive solution for Aquidneck Island and addresses all asset condition, safety, environmental, thermal, and reliability concerns at the least cost.

The plan introduces new 13.8kV capacity in the heart of the existing Newport 4.16kV system sourced from the [redacted] supply system. No load will be left un-served for loss of a transformer or supply line resulting in a very reliable supply to the City of Newport and southern Middletown.

The plan provides capacity to supply load growth on Aquidneck Island well beyond the study horizon period at relatively low cost. Spare capacity will exist at Dexter, Jepson and Newport substations to supply future load growth.

The plan eliminates substation equipment in need of replacement or upgrades; eliminates the need to upgrade manhole and ductline infrastructure to reinforce the 23kV supply system; [redacted]

3.5 *Business and Customer Issues*

The project follows up on action items proposed by the Company to the RIPUC to identify and resolve electrical related issues in the area as a result of interruptions to the Newport electrical system that resulted in significant customer outages in the summer of 2003. Failure to execute this project may impact commitment made by the Company to state regulators.

3.6 *Alternatives*

Alternative 1: [redacted] Line to Newport and substation additions ($82.85M)

The Company considered the following work under this Alternative.

[redacted] A comprehensive routing analysis was completed for this supply line and this analysis concluded the line would have to be built underground on city streets.

[redacted] station would consist of a single transformer supplying metal-clad switchgear with (4) 13.8kV feeder positions. [redacted]

Construct a new [redacted] substation in Newport on a parcel of land recently acquired for this purpose. The station would consist of two (2) transformers supplying metal-clad

switchgear with (8) 13.8kV feeder positions with five feeders being initially installed. The [redacted] station would consist of two (2) transformers supplying metal-clad switchgear with (3) 23kV supply lines.

This alternative would retire North Aquidneck, South Aquidneck, Bailey Brook, and Vernon substations to relieve the highly loaded 23kV supply system and is part of a comprehensive solution to address asset condition, environmental, thermal, and reliability concerns at least cost. However upgrading the 23kV supply system is not an economical approach because most of the infrastructure consists of small paper and lead cable installed in 3-inch ductline. The small ductline is not suitable to house the required larger solid dielectric cables. Thus, upgrading this infrastructure is not recommended due to the significant cost impact.

Although this plan has similar reliability benefits tho the chosen plan, the estimated cost of this plan is $82.85M, which is $29.00M higher than the chosen plan. Moreover, there is no economic or reliability benefit to implement this plan over the chosen plan.

Alternative 2: Non-Wires Alternative

The recommended plan is part of a comprehensive solution to address asset condition, safety, reliability, and environmental concerns on Aquidneck Island. The need for these investments is immediate. Due to the immediate need for these investment and because many concerns are related to asset condition and environmental issues, a non-wires solution is not applicable. New supply and distribution capacity is the only reasonable alternative to immediately address the identified concerns.

3.7 *Safety, Environmental and Project Planning Issues*

Voltage conversions are required to upgrade the distribution system from 4.16kV to 13.8kV in Newport and Middletown. Outages are required to energize the converted areas at 13.8kV. These conversions and outages may have to occur during off hours or winter months to avoid conflicts with [redacted] tourist season.

3.8 *Execution Risk Appraisal*

Number	Detailed Description of Risk / Opportunity	Probability	Impact		Score		Strategy	Risk Owner	Comments/Actions
			Cost	Schedule	Cost	Schedule			
1	Drama out EFSB approval of Tiverton substation relocation	3	3	5	9	15	Mitigate	Project Manager RDW	Meet with abutters during stakeholder outreach process to discuss mitigative measures
2	Limited opportunities for outage for Line 61 Loop construction	3	1	3	3	9	Mitigate	Project Manager	Outages will be planned one year in advance and an outage coordination consultant will be brought onto the project team. Schedule construction to finish during off peak period.
3	Construction delays due to poor weather or damage from major storms	2	3	3	6	6	Accept	Project Manager	Create some slack within the schedule
4	Limited opportunities for outage for Newport Substation connection to Line 63	3	1	3	3	9	Mitigate	Project Manager	Gate 2 has a breaker position that may be used to prevent the need for an outage. Working with the engineering team to decide best options to eliminate the need for an outage
5	Drama out EFSB approval of Line 61 62 conversions	3	1	5	3	15	Mitigate	Legal RDW PM	Public outreach consultant (RDW) has been brought onto the project team.
6	Limited opportunities for Line 61 62 outages for construction outovers	4	1	3	4	12	Mitigate	Project Manager Construction Supervisor	Outages will be planned one year in advance and an outage coordination consultant will be brought onto the project team. Construction will be scheduled so that outovers will be performed during off peak periods
7	Limited opportunities for Tiverton Substation construction outovers	3	1	3	3	9	Mitigate	Project Manager	Outages will be planned one year in advance and an outage coordination consultant will be brought onto the project team.
8	Limited opportunities for distribution system outages for outovers during construction	5	1	5	5	25	Mitigate	Project Manager	An outage coordination consultant will be brought onto the project team.
9	Change in ADA clearance requirement from 3' to 4' during design construction	2	2	2	4	4	Avoid	Project Manager Legal	Obtain construction permits from DOT early prior to possible change in ADA regulations
10	Construction delay due to the utilities not transferring their lines within the project schedule	4	3	3	12	12	Avoid	Project Manager Construction Supervisor	Coordinate construction plan with Verizon during constructability review process. Coordination during design has started and will be maintained through project
11	General public opposition to the project	3	2	4	6	12	Mitigate	RDW PM Outreach Group	Public outreach consultant (RDW) has been brought onto the project team. Project information (fact sheets talking points) for all projects on Aquidneck Island to be developed.
12	Negative impact to wetlands contained on Tiverton substation parcel during construction relocation	2	2	2	4	4	Mitigate	VHB Substation Engineering Construction Supervisor	VHB has determined all wetlands and will ID construction mitigation requirements. Design will account for minimizing wetlands impacts. Construction activities will need to follow SESC measures
13	FAA may require certain mitigative measures for construction near Newport Airport	3	2	1	6	3	Accept	Distribution Design	Submit required documentation for each pole to be installed early in the design process
14	Majority of the distribution and subtransmission work is on well traveled roadways	5	3	1	15	5	Accept	Distribution Line Construction Coordinator	Develop traffic control and detour plans for the project and perform extensive coordination with the DOT and town forces
15	Numerous poles appear to be encroaching on private property and easement rights are believed to not have been obtained	4	1	1	4	4	Accept	Real Estate PM	Budget and time to be allocated to obtain proper rights easements as required
16	Approval to install 2 additional steel poles within the existing easement with [redacted] along Line 61 involves extensive coordination and takes a significant amount of time to get the necessary approvals	5	1	5	5	25	Accept	Real Estate PM	Early coordination with the army has begun and will continue so as to mitigate the issue prior to commencement of construction
17	Approval from [redacted] for Gate 2 substation work is required from base commander. Construction work at the substation is scheduled to begin in mid 2015	5	1	5	5	25	Accept	Real Estate PM	Early coordination with the [redacted] has begun in order to mitigate this issue
18	Limited construction windows for work in Middletown and Newport	4	2	5	8	20	Accept	Project Manager	Extensive coordination of all construction activities and schedule, traffic management plan, detour plans etc will be necessary in advance of any construction work

3.9 *Permitting*

Permit Name	Probability Required (Certain/ Likely/ Unlikely)	Duration To Acquire Permit	Status (Complete/ In Progress Not Applied For)	Estimated Completion Date
RIDEM Permit	Certain	6 months	Approved	June 2017
Newport - Special Use Permit	Certain	7 months	Approved	February 2018
EFSB Permit Approval – Jepson substation and 61/62 line Upgrade	Certain	12 to 18 months	Approved	03/31/17
Road Opening Permit	Certain	3 months	In Progress	Road Open Permits are project specific
Building Permit	Certain	4 months	In Progress	In Process

3.10 *Investment Recovery*

3.10.1 Investment Recovery and Regulatory Implications

Investment recovery will be through standard rate recovery mechanisms approved by the appropriate agencies.

3.10.2 Customer Impact

This project results in an indicative first full year revenue requirement when the asset is placed in service equal to approximately $9.247M. This is indicative only. The actual revenue requirement will differ, depending upon the timing of the next rate case and/or the timing of the next filing in which the project is included in rate base

3.10.3 CIAC / Reimbursement

N/A

3.11 *Financial Impact to National Grid*

3.11.1 Cost Summary Table

Project Number	Project Title	Project Estimate Level (%)	Spend ($M)	Prior Yrs	Current Planning Horizon Yr. 1 2018/19	Yr. 2 2019/20	Yr. 3 2020/21	Yr. 4 2021/22	Yr. 5 2022/23	Yr. 6 + 2023/24	Total
C015158	Newport Sub	Est Lvl (e.g. +/- 10%)	CapEx	2.517	4.636	3.926	0.000	0.000	0.000	0.000	11.079
			OpEx	0.019	0.000	0.000	0.000	0.000	0.000	0.000	0.019
			Removal	0.204	0.000	0.000	0.000	0.000	0.000	0.000	0.204
			Total	2.740	4.636	3.926	0.000	0.000	0.000	0.000	11.302
C024159	Newport [redacted] Line 63	Est Lvl (e.g. +/- 10%)	CapEx	0.425	0.717	0.617	0.000	0.000	0.000	0.000	1.759
			OpEx	0.002	0.010	0.015	0.000	0.000	0.000	0.000	0.027
			Removal	0.000	0.029	0.096	0.000	0.000	0.000	0.000	0.125
			Total	0.427	0.756	0.728	0.000	0.000	0.000	0.000	1.911
C028628	Newport SubTran & Dist	Est Lvl (e.g. +/- 10%)	CapEx	4.254	6.089	6.270	3.271	0.000	0.000	0.000	19.884
			OpEx	0.402	0.420	0.627	0.337	0.000	0.000	0.000	1.786
			Removal	0.502	0.591	0.814	0.669	0.000	0.000	0.000	2.576
			Total	5.158	7.100	7.711	4.277	0.000	0.000	0.000	24.246
C054052	N Aquidneck Retirement	Est Lvl (e.g. +/- 10%)	CapEx	0.000	0.000	0.000	0.000	0.000	0.000	0.000	0.000
			OpEx	0.000	0.000	0.000	0.000	0.000	0.000	0.000	0.000
			Removal	0.000	0.000	0.040	0.110	0.180	0.000	0.000	0.330
			Total	0.000	0.000	0.040	0.110	0.180	0.000	0.000	0.330
C054054	Jepson Sub	Est Lvl (e.g. +/- 10%)	CapEx	0.009	0.532	1.700	2.781	0.000	0.000	0.000	5.022
			OpEx	0.000	0.050	0.162	0.270	0.000	0.000	0.000	0.482
			Removal	0.428	0.070	0.250	0.380	0.000	0.000	0.000	1.128
			Total	0.437	0.652	2.112	3.431	0.000	0.000	0.000	6.632
C058310	Harrison Sub Improvement	Est Lvl (e.g. +/- 10%)	CapEx	0.000	0.000	0.191	0.093	0.000	0.000	0.000	0.284
			OpEx	0.000	0.000	0.029	0.013	0.000	0.000	0.000	0.042
			Removal	0.000	0.000	0.000	0.000	0.000	0.000	0.000	0.000
			Total	0.000	0.000	0.220	0.106	0.000	0.000	0.000	0.326
C058401	Merton Sub Imporvements	Est Lvl (e.g. +/- 10%)	CapEx	0.000	0.000	0.203	0.134	0.000	0.000	0.000	0.337
			OpEx	0.000	0.000	0.030	0.020	0.000	0.000	0.000	0.050
			Removal	0.000	0.000	0.000	0.000	0.000	0.000	0.000	0.000
			Total	0.000	0.000	0.233	0.154	0.000	0.000	0.000	0.387
C058404	Kingston Sub improvements	Est Lvl (e.g. +/- 10%)	CapEx	0.000	0.000	0.217	0.253	0.000	0.000	0.000	0.470
			OpEx	0.000	0.000	0.058	0.067	0.000	0.000	0.000	0.125
			Removal	0.000	0.000	0.000	0.000	0.000	0.000	0.000	0.000
			Total	0.000	0.000	0.275	0.320	0.000	0.000	0.000	0.595
C058407	S Aquidneck Retirement	Est Lvl (e.g. +/- 10%)	CapEx	0.000	0.000	0.000	0.000	0.000	0.000	0.000	0.000
			OpEx	0.000	0.000	0.000	0.000	0.000	0.000	0.000	0.000
			Removal	0.000	0.000	0.020	0.142	0.180	0.000	0.000	0.342
			Total	0.000	0.000	0.020	0.142	0.180	0.000	0.000	0.342
CD00649	Gate 2 Substation	Est Lvl (e.g. +/- 10%)	CapEx	1.894	0.020	0.336	0.000	0.000	0.000	0.000	2.250
			OpEx	0.024	0.000	0.022	0.000	0.000	0.000	0.000	0.046
			Removal	0.006	0.000	0.223	0.000	0.000	0.000	0.000	0.229
			Total	1.924	0.020	0.581	0.000	0.000	0.000	0.000	2.525
CD00651	Bailey Brook Retirement	Est Lvl (e.g. +/- 10%)	CapEx	0.000	0.000	0.000	0.000	0.000	0.000	0.000	0.000
			OpEx	0.000	0.000	0.000	0.000	0.000	0.000	0.000	0.000
			Removal	0.000	0.000	0.232	0.231	0.000	0.000	0.000	0.463
			Total	0.000	0.000	0.232	0.231	0.000	0.000	0.000	0.463
CD00652	Vernon Retirement	Est Lvl (e.g. +/- 10%)	CapEx	0.000	0.000	0.000	0.000	0.000	0.000	0.000	0.000
			OpEx	0.000	0.000	0.000	0.000	0.000	0.000	0.000	0.000
			Removal	0.000	0.000	0.020	0.110	0.172	0.000	0.000	0.302
			Total	0.000	0.000	0.020	0.110	0.172	0.000	0.000	0.302
Total Project Sanction			CapEx	9.099	11.994	13.460	6.532	0.000	0.000	0.000	41.085
			OpEx	0.447	0.480	0.943	0.707	0.000	0.000	0.000	2.577
			Removal	1.140	0.690	1.695	1.642	0.532	0.000	0.000	5.699
			Total	10.686	13.164	16.098	8.881	0.532	0.000	0.000	49.361

3.11.2 Project Budget Summary Table

$M	Prior Yrs (Actual)	Current Planning Horizon Yr. 1 2018/19	Yr. 2 2019/20	Yr. 3 2020/21	Yr. 4 2021/22	Yr. 5 2022/23	Yr. 6 + 2023/24	Total
CapEx	9.099	14.769	9.801	4.565	0.000	0.000	0.000	38.234
OpEx	0.447	0.854	0.559	0.329	0.000	0.000	0.000	2.189
Removal	1.140	1.268	1.094	0.898	0.540	0.000	0.000	4.940
Total Cost in Bus. Plan	10.686	16.891	11.454	5.792	0.540	0.000	0.000	45.363

Variance (Business Plan-Project Estimate)

$M	Prior Yrs (Actual)	Current Planning Horizon Yr. 1 2018/19	Yr. 2 2019/20	Yr. 3 2020/21	Yr. 4 2021/22	Yr. 5 2022/23	Yr. 6 + 2023/24	Total
CapEx	0.000	2.775	(3.659)	(1.967)	0.000	0.000	0.000	(2.851)
OpEx	0.000	0.374	(0.384)	(0.378)	0.000	0.000	0.000	(0.388)
Removal	0.000	0.578	(0.601)	(0.744)	0.008	0.000	0.000	(0.759)
Total Cost in Bus. Plan	0.000	3.727	(4.644)	(3.089)	0.008	0.000	0.000	(3.998)

3.11.3 Cost Assumptions

The estimate for the [redacted] line was obtained from Routing Analysis Report prepared by transmission line engineering and consultants to the Company. This Conceptual Engineering Estimate has been developed with a mix of planning grade and project grade estimates to date. The estimates have been prepared using historical cost data or data from similar projects with an accuracy of -25% to +50%.

The overall distribution line work estimate was developed utilizing Work Request design estimates in most cases and planning grade estimates for other portions. This is an Investment Grade Estimate with a level of accuracy ranging from -50% to +50%.

The estimates for the distribution work to be completed under funding C028628 and CD00649 are based on STORMS estimate.

3.11.4 Net Present Value / Cost Benefit Analysis

N/A

3.11.4.1 *NPV Summary Table*

N/A

3.11.4.2 *NPV Assumptions and Calculations*

3.11.5 Additional Impacts

3.12 *Statements of Support*

3.12.1 Supporters

The supporters listed have aligned their part of the business to support the project.

Department	Individual	Responsibilities
Investment Planning	Glen DiConza	Endorses relative to 5-year business plan or emergent work
Resource Planning	Anne Wyman	Endorses construction resources, cost estimate, schedule, and portfolio alignment
Asset Management / Planning	Al Labarre	Endorses scope, estimate, and schedule with the company's goals, strategies, and objectives
Engineering and Design	Mark Larrabee Kevin Hellmuth Leonard G.Swanson	Endorses scope, design, conformance with design standards
Project Management	Dave Arthur Sara Migdal	Endorses resources, cost estimate, schedule
Electric Project Estimation	John Duffy	Endorses Cost Estimate

3.12.2 Reviewers

The reviewers have provided feedback on the content/language of the paper.

Function	Individual
Finance	Felicia Midkiff
Regulatory	Ed Turieo
Jurisdictional Delegate(s)	Patricia Easterly
Procurement	Diego Chevere
Control Centers (CC)	Michael Gallagher Philip Lavallee

4 Appendices

4.1 *Sanction Request Breakdown by Project*

$M	C015158	C024159	C028628	C054052	C054054	C058310	C058401	C058404	CD00651	Total
CapEx	9.039	2.066	14.762	0.050	0.610	0.030	0.030	0.030	0.050	26.667
OpEx	0.019	0.030	1.532	0.000	0.060	0.000	0.000	0.000	0.000	1.641
Removal	0.204	0.090	2.022	0.000	0.550	0.000	0.000	0.000	0.000	2.866
Total	9.262	2.186	18.316	0.050	1.220	0.030	0.030	0.030	0.050	31.174

4.2 *Other Appendices*

N/A

4.3 *NPV Summary*

N/A

4.4 *Customer Outreach Plan*

National Grid has hired a consultant to develop and implement a comprehensive public outreach plan for all of proposed projects on Aquidneck Island. This outreach effort is part of a comprehensive and proactive public outreach process to establish and maintain communications with stakeholders (e.g., project abutters, residents, businesses, federal, state and local officials, and community groups).

This process will include opportunities for public education and communication regarding the need for the Project, the permitting and siting processes, the detailed construction plans, the dissemination of construction updates and outreach prior to and during construction, and follow-up outreach after Project completion. The process will be designed to engage the community in a two-way dialogue, facilitate transparency throughout the Project, foster public participation, and solicit feedback from stakeholders.

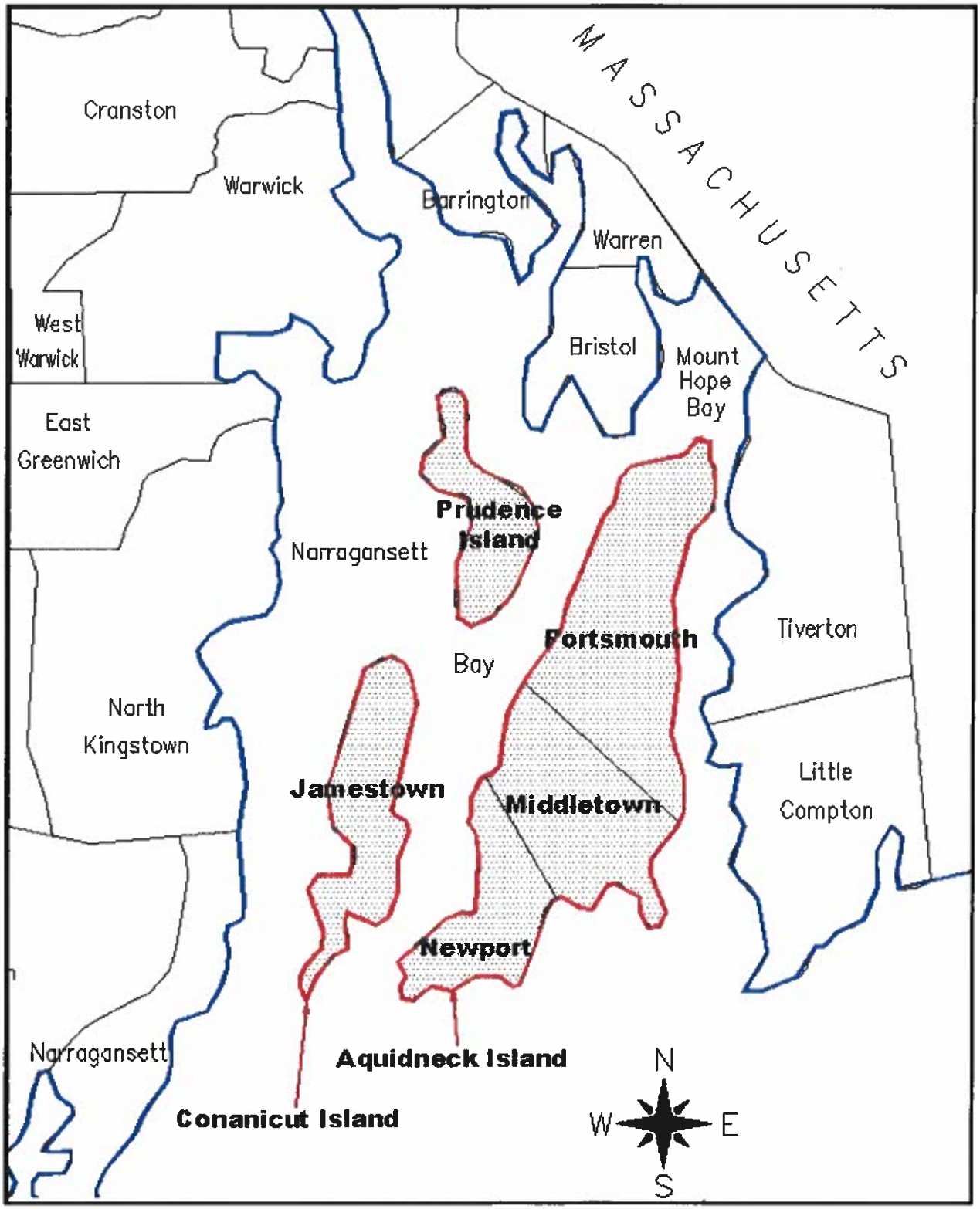
Cranston
Warwick
Barrington
Warren
MASSACHUSETTS
West Warwick
Bristol
Mount Hope Bay
East Greenwich
Prudence Island
Narragansett
Bay
Portsmouth
Tiverton
North Kingstown
Jamestown
Middletown
Little Compton
Newport
Narragansett
Aquidneck Island
Conanicut Island
N
W
E
S

4.1 *Sanction Request Breakdown by Project*

$M	C015158	C024159	C028628	C054052	C054054	C058310	C058401	C058404	C058407	CD00649	CD00651	CD00652	Total
CapEx	9.039	1.366	13.648	0.020	0.600	0.020	0.020	0.020	0.000	1.914	0.020	0.000	26.667
OpEx	0.019	0.030	1.508	0.000	0.060	0.000	0.000	0.000	0.000	0.024	0.000	0.000	1.641
Removal	0.204	0.090	1.976	0.000	0.550	0.000	0.000	0.000	0.020	0.006	0.000	0.020	2.866
Total	9.262	1.486	17.132	0.020	1.210	0.020	0.020	0.020	0.020	1.944	0.020	0.020	31.174

US Sanction Paper

nationalgrid

Title:	Aquidneck Island	**Sanction Paper #:**	USSC-14-262 V2
Project #:	C028628, CD00649, C015158, C054054, C024159, CD00649, CD00651, CD00652, C058401, C058310, C058404, C054052, C058407	**Sanction Type:**	Partial Sanction
Operating Company:	The Narragansett Electric Co.	**Date of Request:**	02/10/16
Author:	Ayo Osimboni	**Sponsor:**	John Gavin Vice President Electric Asset Management
Utility Service:	Electricity T&D	**Project Manager:**	Ayo Osimboni

1 Executive Summary

1.1 Sanctioning Summary

This paper requests partial sanction in the amount of $13.937M with a tolerance of ±10% for full implementation of work on Gate 2 Feeder 38W2 and conversion of feeder 122J6, which are part of the distribution work associated with funding # C028628 also work associated with funding # CD00649, Gate 2 Substation D-Sub all of which are part of the Aquidneck Island Reliability Project. This sanction amount will provide funding for the construction activities.

The sanction amount of $13.937M is broken down into:

$ 12.623M	Capex
$ 0.423M	Opex
$ 0.891M	Removal

NOTE the potential investment of $55.827M and a tolerance of -25% +50% contingent upon submittal and approval of a Project Sanction paper following completion of all engineering activities.

1.2 Project Summary

Build a [redacted] feeder at Gate 2 substation in the City of Newport to provide short-term relief to the City prior to the construction of the new Newport substation and also begin the upgrade of the distribution lines, Gate 2 Feeder 38W2 and Conversion of Feeder 122J6 which are part of the overall distribution line upgrade for the Aquidneck Island Reliability project.

1.3 Summary of Projects

Project Number	Project Type (Elec only)	Project Title	Estimate Amount ($M)
C028628	D-Line	Newport SubTran & Dist	17.024
CD00649	D-Sub	Gate 2 Substation	1.890
C024159	D-Line	Newport [redacted] line 63	1.411
C054054	D-Line	Jepson Sub	6.631
C015158	D-Sub	Newport Sub	10.557
C054052	D-Sub	N. Aquidneck Retirment	0.332
C058310	D-Sub	Harrison Sub Improvement	0.326
C058401	D-Sub	Merton Sub Improvements	0.387
C058404	D-Sub	Kingston Sub Improvements	0.595
C058407	D-Sub	S. Aquidneck Retirements	0.342
CD00651	D-Sub	Bailey Brook Retirement	0.463
CD00652	D-Sub	Vernon Retirement	0.302
CD00656	D-Sub	Jepson Substation	15.567
		Total	55.827

1.4 Associated Projects

Project Number	Project Type (Elec only)	Project Title	Estimate Amount ($M)
C041183	T-Sub	Jepson [redacted]	$13.20
C041184	T-Line	Line 61/62 Conversion [redacted]	$22.70
C041185	T-Sub	Dexter [redacted]	$3.90
		Total	$39.80

1.5 Prior Sanctioning History

Date	Governance Body	Sanctioned Amount	Potential Project Investment	Paper Title	Sanction Type	Tolerance
12/10/2014	USSC	$10.000M	$53.585M	Aquidneck Island	Partial Sanction	+/-25%
11/09/2011	USSC	$15.000M	$42.00M	Aquidneck Island	Partial	-25% +50%
12/03/2008	DCIG	$15.500M	$15.50M	Substation Installation Project	Sanction	+/- 25%
04/02/2008	DCIG	$3.500M	$12.30M	Newport Substation Installation	Strategy	+/- 25%
10/11/2005	Power Plant	$1.000M	N.A.	Newport Land Purchase	Strategy	N.A.

1.6 Next Planned Sanction Review

Date (Month/Year)	Purpose of Sanction Review
June 2017	Project Sanction (Distribution Line Work)

1.7 Category

Category	Reference to Mandate, Policy, NPV, or Other
○ Mandatory ◉ Policy- Driven ○ Justified NPV ○ Other	National Grid USA Internal Strategy Document Distribution Planning Criteria Strategy Issue 1 – February 2011

1.8 Asset Management Risk Score

Asset Management Risk Score: 41

Primary Risk Score Driver: (Policy Driven Projects Only)

◉ Reliability ○ Environment ○ Health & Safety ○ Not Policy Driven

1.9 Complexity Level

◉ High Complexity ○ Medium Complexity ○ Low Complexity ○ N/A

Complexity Score: 33

1.10 Process Hazard Assessment

A Process Hazard Assessment (PHA) is required for this project:

○ Yes ◉ No

1.11 Business Plan

Business Plan Name & Period	Project included in approved Business Plan?	Over / Under Business Plan	Project Cost relative to approved Business Plan ($)
FY17-2021 New England Distribution Electric capital Plan	◉ Yes ○ No	◉ Over ○ Under ○ NA	9.774M

1.12 If cost > approved Business Plan how will this be funded?

Inclusion of dollars in future plans and approval by Rhode Island PUC through the annual ISR Approval process will be required.

1.13 Current Planning Horizon

		Current Planning Horizon						
$M	Prior Yrs	Yr. 1 2016/17	Yr. 2 2017/18	Yr. 3 2018/19	Yr. 4 2019/20	Yr. 5 2020/21	Yr. 6 + 2021/22	Total
CapEx	3.971	3.676	5.247	15.705	11.978	5.523	0.000	46.100
OpEx	0.063	0.277	0.381	1.161	1.911	0.524	0.000	4.317
Removal	0.060	0.583	0.774	1.819	1.650	0.524	0.000	5.410
CIAC/Reimbursement	0.000	0.000	0.000	0.000	0.000	0.000	0.000	0.000
Total	4.094	4.536	6.402	18.685	15.539	6.571	0.000	55.827

1.14 Key Milestones

Milestone	Target Date: (Month/Year)
Partial Sanction for Dline Project	February 2016
Construction Complete - Gate 2 Feeder	March 2016
Ready for Load - Gate 2 Feeder	June 2016
EFSB Decision - [redacted] Reinforcements	March 2017
Engineering Design Complete 4kV Station Upgrades	June 2017
Construction Start – 4kV Station Upgrades	June 2017
Engineering Design Complete Newport Substation	March 2018

Milestone	Target Date: (Month/Year)
Construction Start - Newport Substation	April 2018
Engineering Design Complete Jepson Substation	August 2018
Construction Start – Jepson Substation	September 2018
Construction Complete - Newport Substation	September. 2019
Construction Start – 4kV Station Retirements	December 2019
Ready for Load - Newport Substation	December 2019
Construction Complete – 4kV Station Upgrades	March 2020
Construction Complete – Jepson Substation	March 2020
Ready for Load - Jepson Substation	November 2020
Engineering Design Complete Station Retirements	September 2022
Project Closure Report	September 2023

1.15 Resources, Operations and Procurement

Resource Sourcing			
Engineering & Design Resources to be provided	☑ Internal		☑ Contractor
Construction/Implementation Resources to be provided	☑ Internal		☑ Contractor
Resource Delivery			
Availability of internal resources to deliver project:	○ Red	○ Amber	◉ Green
Availability of external resources to deliver project:	○ Red	○ Amber	◉ Green
Operational Impact			
Outage impact on network system:	○ Red	○ Amber	◉ Green
Procurement Impact			
Procurement impact on network system:	○ Red	○ Amber	◉ Green

1.16 Key Issues (include mitigation of Red or Amber Resources)

1	State and local permits are required to build Newport substation and the distribution line work.
2	The ER report was filled with the Energy Facility Siting Board (EFSB) on

	December 30th 2015 for the proposed Jepson substation and 61/62 line upgrade.
3	[redacted] approval to build the 13.8kV feeder at Gate 2 substation has been received but we still need their approval to build the [redacted] tap to proposed Newport substation.
4	A major public outreach effort is ongoing for communities impacted by the substation construction and distribution line construction and conversion work.
5	Coordination with RIDOT is ongoing to review compliance with the Americans with Disabilities Act (ADA) for new pole sets or pole replacements.
6	A traffic mitigation plan is needed for the distribution line construction and the proposed conversion work.

1.17 Climate Change

Contribution to National Grid's 2050 80% emissions reduction target:	◉ Neutral	○ Positive	○ Negative
Impact on adaptability of network for future climate change:	◉ Neutral	○ Positive	○ Negative

1.18 List References

1	Distribution Planning Criteria Strategy, Issue 1, February 2011
2	Conceptual Engineering Report, Newport Mall Substation, 7/20/11
3	Conceptual Engineering Report, Gate 2 Substation, 7/21/11
4	Conceptual Engineering Report, Jepson Substation, 7/22/11
5	Conceptual Engineering Report, Bailey Brook Substation, 7/25/11
6	Conceptual Engineering Report, Vernon Substation, 7/25/11
7	Newport Area Supply and Distribution Study, May 2007
8	Jepson Equipment Condition Assessment, February 2005

2 *Decisions*

The Senior Executive Sanctioning Committee Committee (SESC) at a meeting held on 02/22/16:

(a) APPROVED the investment of $13.937M and a tolerance of +/- 10% for construction activities associated with building the 69/13.8kV feeder at Gate 2 substation and begin the distribution upgrade of Gate 2 feeder 38W2 and 122J6 which are all part of Aquidneck Island Reliability Project.

(b) NOTED the potential distribution investment $55.827M to and a tolerance of -25% +50%, contingent upon submittal and approval of a Project Sanction paper following completion of final engineering and design.

(c) NOTED that Ayo Osimboni has the approved financial delegation to undertake the activities stated in (a).

Signature.....Date 3/11/16

Margaret Smyth
US Chief Financial Officer
Chair, Senior Executive Sanctioning Committee

3 *Sanction Paper Detail*

Title:	Aquidneck Island	**Sanction Paper #:**	USSC-14-262 V2
Project #:	C028628, CD00649, C015158, C054054, C024159, CD00649, CD00651, CD00652, C058401, C058310, C058404, C054052, C058407	**Sanction Type:**	Partial Sanction
Operating Company:	The Narragansett Electric Co.	**Date of Request:**	02/10/16
Author:	Ayo Osimboni	**Sponsor:**	John Gauvin Vice President Electric Asset Management
Utility Service:	Electricity T&D	**Project Manager:**	Ayo Osimboni

3.1 Background

The Newport Study Area encompasses the City of Newport and the towns of Portsmouth, Middletown, Jamestown and Prudence Island. Figure 1 shows a geographic map of the study area. The area has approximately 34,000 customers with a peak load of 146MW. Aquidneck Island has most of the load and peaks at 135MW, Jamestown peaks at 10MW and Prudence Island at 1MW.

The area is supplied by [redacted] lines (L14 & M13) which terminate on the northern half of Aquidneck Island at Dexter substation. From Dexter substation, [redacted] lines (Lines 61 & 62) continue south to supply Jepson substation. From Jepson substation, [redacted] line (Line 63) continues south to supply [redacted] Gate 2 Substation. Figure 2 shows a one-line of the existing transmission system.

[redacted] The remainder of the load is supplied by five (5) 23kV lines sourced from Jepson and Gate 2 substations which supply a 4.16kV distribution system with approximately 70MW of load. Twelve 23/4.16kV substations, ten located in the southern half of Aquidneck Island and two in Jamestown, supply this 4.16kV system. Figure 3 shows a one-line of the existing sub-transmission system and Figure 4 shows the approximate geographic areas supplied by the distribution system.

Interruptions to the Newport electrical system resulting in significant customer outages occurred in the summer of 2003. One of the action items proposed by the Company to the Rhode Island Public Utility Commission (RI PUC) was to conduct a planning study to identify and resolve electrical related issues in the area.

This area study was published in May 2007 and titled "The Newport Area Supply and Distribution Study". The Study identified an immediate need to build a new substation in the City of Newport to address both normal and contingency overloads. The study recommended construction of a new substation consisting of a single transformer supplying four (4) 13.8kV feeders. The new station was to be sourced from Line 63, a radial [redacted] supply line that supplies the [redacted] Gate 2 substations.

Construction of a new substation was contingent on the company acquiring a parcel of land in Newport for this substation. The Company encountered significant challenges in acquiring a suitable land parcel which has impacted the in-service date of this substation. To address critical loading concerns in the City of Newport, the 2008 Annual Plan recommended accelerating some of the distribution construction identified in the 2007 study and recommended redistributing the area load on the supply and distribution systems to optimize all available capacity. All recommended investments are complete.

In 2011, the Company purchased a parcel of land in the City of Newport suitable for a new substation. The company successfully worked with the city to amend the zoning ordinance to allow a substation to be built via a special permit. The substation site was encumbered by a lease that was released by the tenant in 2014. The substation construction is projected to start in the spring 2018 with an in-service date of fall 2019.

Transmission Planning has recently completed a review of the Aquidneck Island transmission supply system. This review identified various n-1 thermal overloads and voltage issues throughout Aquidneck Island. [redacted] The review also identified various asset condition, safety, and environmental concerns with Jepson substation.

Jepson substation consists of a [redacted] The station is located within the 100 year floodplain and directly adjacent to Sisson Pond and entirely within Zone A Watershed Protection Overlay. The station will be rebuilt on company owned land in Middletown and outside the 100 year floodplain and the Zone A Watershed Protection Overlay. The existing station will be retired and all equipment removed.

[redacted] The existing 23/4.16kV station will be retired and load converted to the 13.8kV system. This is the most economical approach as opposed to building a new 23/4.16kV station in Middletown.

3.2 Drivers

The primary driver of this project is reliability. Aquidneck Island is supplied by a highly utilized supply and distribution system. It is increasingly challenging to supply load in southern Middletown and in the City of Newport. The Jepson 13.8kV system has been utilized to provide relief to the 23kV supply system and the 4.16kV distribution system. However, this 13.8kV system has been extended to its limits.

The 23kV supply system is a mixture of overhead and underground construction in Middletown and predominantly underground construction in Newport. [redacted] The 3-inch ducts are not suitable to house required solid dielectric cables, making upgrades to the 23kV supply system challenging and costly.

[redacted]

A number of 23/4.16kV stations in the area have asset condition, safety, environmental, and thermal concerns which need to be addressed. The recommendation is to retire these stations. This recommendation is part of a comprehensive solution developed for Aquidneck Island to address all concerns at least cost.

In the summer of 2003, interruptions to the electrical system in Newport resulted in significant customer outages. One of the action items proposed by the Company to the Rhode Island Public Utility Commission was to conduct a planning study to identify and resolve electrical related issues in the area.

3.3 Project Description

Install a [redacted] feeder at Gate 2 substation in the City of Newport with a recommended in-service date of March 2016. This feeder addresses near-term thermal concerns in Newport until a new substation is built to provide the required long-term relief. All the work associated with this feeder is in-line with the long-term plan for the area resulting in no out of line expenditures.

Build a [redacted] substation in Newport on a parcel of land recently purchased for this purpose. The substation will consist of a single transformer supplying four (4) 13.8kV feeders. [redacted] A one-line of the proposed station is shown on Figure 5.

Build a new substation in Middletown (Jepson Substation) on company owned land. The substation will consist of [redacted] six (6) feeders and

[redacted] (3) supply lines. [redacted]

[redacted]

The 23kV supply system on Aquidneck Island needs relief. The most economical approach is to retire a number of 23/4.16kV stations and to convert the load to the 13.8kV system. This approach addresses asset condition, safety, environmental, thermal, and reliability concerns with these assets at least cost. This approach is part of a comprehensive solution that eliminates the need to install a [redacted] line to Newport (a $32M investment). This approach retires four 23/4.16kV stations which include:

- Vernon substation is a metal-clad station built in 1949. It has two transformers, TR231 installed in 1949 and TR232 installed in 1963. The metal-clad switchgear is obsolete and needs to be replaced to address safety & reliability concerns. Station breakers are obsolete and the TR231 needs to be replaced due to poor condition. The estimated cost to rebuild this station is $4.90M. The retirement of this station eliminates this $4.9M investment.

- Bailey Brook was built in 1941 on a small site with no room for expansion. It is located within local wetlands and adjacent to a brook that is the source of island water supply. Rebuilding the station outside the floodplain is not an economical approach because station is located in downtown Middletown and in a congested area. Locating and permitting a new site is not practical or economical. There is no economic or reliability benefit to keeping this station.

- South Aquidneck is a metal-clad station located within the flood plain. It has a single LTC transformer supplying 3-feeders. The station breakers are obsolete along with the station insulators and arresters. The estimated cost to address these concerns is $0.80M. However, this station cannot be offloaded due to lack of feeder ties and because the site is too small to install a mobile transformer. The LTC is an arcing in oil design which requires a higher level of maintenance.

- North Aquidneck is a metal-clad station with a single transformer supplying 3-feeders. The station has non-standard breakers and limited EMS. The LTC is an arcing in oil design which requires a higher level of maintenance. Station has similar offloading challenges to South Aquidneck making station maintenance very challenging.

The retirement of these 4.16kV station increases the reliability on the 13.8kV distribution system with increased feeder ties. The conversion of the 4.16kV load to 13.8kV also reduces line losses by approximately 90%. A one-line of the proposed station retirements is shown on Figure 8.

3.4 Benefits Summary

The recommended plan is in-line with commitments made by the Company to state regulators. The plan is part of a comprehensive solution for Aquidneck Island and addresses all asset condition, safety, environmental, thermal, and reliability concerns at the least cost.

Plan introduces new 13.8kV capacity in the heart of the existing Newport 4.16kV system [redacted] No load will be left un-served for loss of a transformer or supply line resulting in a very reliable supply to the City of Newport and southern Middletown.

Plan provides capacity to supply load growth on Aquidneck Island well beyond the study horizon period at relatively low cost. Spare capacity will exist at Dexter, Jepson and Newport substations to supply future load growth.

Plan eliminates substation equipment in need of replacement or upgrades; eliminates the need to upgrade manhole and ductline infrastructure to reinforce the 23kV supply system; and eliminates the need for a second 69kV line into Newport.

3.5 Business and Customer Issues

The project follows up on action items proposed by the Company to the Rhode Island Public Utility Commission to identify and resolve electrical related issues in the area as a result of interruptions to the Newport electrical system resulting in significant customer outages that occurred in the summer of 2003. Failure to execute this project may impact commitment made by the Company to state regulators.

3.6 Alternatives

Alternative 1: [redacted] Line to Newport and substation additions ($82.85M)

[redacted] A comprehensive routing analysis was completed for this supply line and this analysis concluded the line would have to be built underground on city streets.

[redacted]

Construct a [redacted] substation in Newport on a parcel of land recently acquired for this purpose. The station would consist of two (2) transformers supplying metal-clad switchgear with (8) 13.8kV feeder positions with five feeders being initially installed.

[redacted]

This alternative would retire North Aquidneck, South Aquidneck, Bailey Brook, and Vernon substations to relieve the highly loaded 23kV supply system and is part of a comprehensive solution to address asset condition, environmental, thermal, and reliability concerns at least cost. Upgrading the 23kV supply system is not an economical approach since most of the infrastructure consists of small paper and lead cable installed in 3-inch ductline. The small ductline is not suitable to house the required larger solid dielectric cables. Upgrading this infrastructure is not recommended due to the significant cost impact.

The estimated cost of this plan is $82.85M, or $29.00M higher than the preferred plan. This plan has similar reliability benefits to the preferred plan. However, there is no economic or reliability benefit to implement this plan over the preferred plan.

Alternative 2: Non-Wires Alternative

The recommended plan is part of a comprehensive solution to address asset condition, safety, reliability, and environmental concerns on Aquidneck Island. The need for these investments is immediate. Due to the immediate need for these investment and because many concerns are related to asset condition and environmental issues, a non-wires solution is not applicable. New supply and distribution capacity is the only reasonable alternative to address the identified concerns.

3.7 Safety, Environmental and Project Planning Issues

A filing to the Rhode Island Energy Facility Siting Board ("EFSB") is required to build the proposed [redacted] substation in Middletown and to upgrade [redacted] lines (Line 61 and Line 62) [redacted]. The ER report was filed on December 23rd 2015 with the board.

An Environmental Report is required to support the application to the EFSB for construction of jurisdictional facilities. The Environmental Report was prepared in accordance with the EFSB Rules to provide information on the potential environmental impacts of the electric transmission system improvements proposed by National Grid.

Voltage conversions are required to upgrade the distribution system from 4.16kV to 13.8kV in Newport and Middletown. Outages are required to energize the converted areas at 13.8kV. These conversions and outages may have to occur during off hours or winter months to avoid conflicts with the City of Newport's tourist season.

3.8 Execution Risk Appraisal

Number	Detailed Description of Risk / Opportunity	Probability	Impact		Score		Strategy	Risk Owner	Comments/Actions
			Cost	Schedule	Cost	Schedule			
1	Drawn out EFSB approval of Jepson substation relocation.	3	3	5	9	15	Mitigate	Project Manager/RDW	Meet with abutters during stakeholder outreach process to discuss mitigative measures.
2	Limited opportunities for outage for Line 63 Loop construction.	3	1	3	3	9	Mitigate	Project Manager	Outages will be planned one year in advance and an outage coordination consultant will be brought onto the project team. Schedule construction to finish during off peak period.
3	Construction delays due to poor weather or damage from major storms.	2	3	3	6	6	Accept	Project Manager	Create some slack within the schedule
4	Limited opportunities for outage for Newport Substation connection to Line 63.	3	1	3	3	9	Mitigate	Project Manager	Gate 2 has a breaker position that may be used to prevent the need for or an outage. Working with the engineering team to decide best options to elimimate the need for an outage.
5	Drawn out EFSB approval of Line 61/62 conversions.	3	1	5	3	15	Mitigate	Legal/RDW/PM	Public outreach consultant (RDW) has been brought onto the project team.
6	Limited opportunities for Line 61/62 outages for construction cutovers.	4	1	3	4	12	Mitigate	Project Manager/Construction Supervisor	Outages will be planned one year in advance and an outage coordination consultant will be brought onto the project team. Construction will be scheduled so that cutovers will be performed during off peak periods.
7	Limited opportunities for Jepson Substation construction cutovers.	3	1	3	3	9	Mitigate	Project Manager	Outages will be planned one year in advance and an outage coordination consultant will be brought onto the project team.
8	Limited opportunities for distribution system outages for cutovers during construction.	5	1	5	5	25	Mitigate	Project Manager	An outage coordination consultant will be brought onto the project team.
9	Change in ADA clearance requirement from 3' to 4' during design/construction.	2	2	2	4	4	Avoid	Project Manager/Legal	Obtain construction permits from DOT early prior to possible change in ADA regulations.
10	Construction delays due to other utilities not transfering their lines within the project schedule.	4	1	3	4	12	Avoid	Project Manager/Construction Supervisor	Coordinate construction plan with Verizon during constructability review process. Coordination during design has started and will be maintained through project.
11	General public opposition to the project.	3	2	4	6	12	Mitigate	RDW/PM/Outreach Group	Public outreach consultant (RDW) has been brought onto the project team. Project information (facts sheets/talking points) for all projects on Aquidneck Island to be developed.
12	Negative impacts to wetlands contained on Jepson substation parcel during construction/relocation.	2	2	2	4	4	Mitigate	VHB/Substation Engineering/Construction Supervisor	VHB has delineated all wetlands and will ID construction mitigation requirements. Design will account for minimizing wetlands impacts. Construction activities will need to follow SESC measures.
13	FAA may require certain mitigative measures for construction [redacted]	3	2	1	6	3	Accept	Distribution Design	Submit required documentation for each pole to be installed early in the design process.
14	Majority of the distribution and subtransmission work is on well traveled roadways.	5	3	1	15	5	Accept	Distribution Line Construction/Contractor	Develop traffic control and detour plans for the project and perform extensive coordination with the DOT and cities/towns.
15	Numerous poles appear to be encroaching on private property and easements/rights are believed to not have been obtained.	4	1	1	4	4	Accept	Real Estate/PM	Budget and time to be allocated to obtain proper rights/easements as required.
16	Approval to install 2 additional steel poles within the exsting easement with [redacted] along Line 63 involves extensive coordination and teakes a significan amount of time to get the necessary approvals.	5	1	5	5	25	Accept	Real Estate/PM	Early coordination with the navy has begun and will continue so as to mitigate the issue prior to commencement of construction.
17	Approval [redacted] for Gate 2 substation work is required from base commander. Construction work at the substation is schedule to begin in mid 2015	5	1	5	5	25	Accept	Real Estate/PM	Early coordination [redacted] has begun in order to mitigate this issue.
18	Limited construction windows for work in Middletown and Newport.	4	2	5	8	20	Accept	Project Manager	Extensive coordination of all construction activities and schedule, traffica management plan, detour plans etc will be necessary in advance of amy construction work.

3.9 Permitting

Permit Name	Probability Required (Certain/ Likely/ Unlikely)	Duration To Acquire Permit	Status (Complete/ In Progress Not Applied For)	Estimated Completion Date
RIDEM Permit	Likely	6 months	Not Applied For	TBD
Newport - Special Use Permit	Certain	7 months	Not Applied For	10/31/17
EFSB Permit Approval – Jepson substation and 61/62 line Upgrade	Likely	12 to 18 months	In-progress	03/31/17
Road Opening Permit	Certain	3 months	Not Applied For	TBD
Building Permit	Certain	4 months	Not Applied For	TBD

3.10 Investment Recovery

3.10.1 Investment Recovery and Regulatory Implications

Investment recovery will be through standard rate recovery mechanisms approved by the appropriate agencies.

3.10.2 Customer Impact

This project results in an indicative first full year revenue requirement when the asset is placed in service equal to approximately $9.247M. This is indicative only. The actual revenue requirement will differ, depending upon the timing of the next rate case and/or the timing of the next filing in which the project is included in rate base.

3.10.3 CIAC / Reimbursement

N/A

3.11 Financial Impact to National Grid

3.11.1 Cost Summary Table: Distribution Project

Project Number	Project Title	Project Estimate Level (%)	Spend ($M)	Prior Yrs	Current Planning Horizon Yr. 1 2016/17	Yr. 2 2017/18	Yr. 3 2018/19	Yr. 4 2019/20	Yr. 5 2020/21	Yr. 6 + 2021/22	Total
C028628	Newport SubTran & Dist	Est Lvl (e.g. +/- 25%)	CapEx	0.752	2.022	3.620	3.620	3.620	0.000	0.000	13.634
			OpEx	0.011	0.213	0.272	0.272	0.453	0.000	0.000	1.221
			Removal	0.022	0.426	0.634	0.634	0.453	0.000	0.000	2.169
			Total	0.785	2.661	4.526	4.526	4.526	0.000	0.000	17.024
CD00649	Gate 2 Substation	Est Lvl (e.g. +/- 25%)	CapEx	1.804	0.000	0.000	0.000	0.000	0.000	0.000	1.804
			OpEx	0.051	0.000	0.000	0.000	0.000	0.000	0.000	0.051
			Removal	0.035	0.000	0.000	0.000	0.000	0.000	0.000	0.035
			Total	1.890	0.000	0.000	0.000	0.000	0.000	0.000	1.890
C024159	Newport [redacted] line 63	Est Lvl (e.g. +/- 25%)	CapEx	0.156	0.093	0.108	0.855	0.000	0.000	0.000	1.212
			OpEx	0.000	0.000	0.007	0.052	0.000	0.000	0.000	0.059
			Removal	0.000	0.000	0.016	0.124	0.000	0.000	0.000	0.140
			Total	0.156	0.093	0.131	1.031	0.000	0.000	0.000	1.411
C054054	Jepson Sub	Est Lvl (e.g. +/- 25%)	CapEx	0.000	0.320	0.078	2.580	1.940	1.523	0.000	6.441
			OpEx	0.000	0.000	0.001	0.040	0.030	0.024	0.000	0.095
			Removal	0.000	0.000	0.001	0.040	0.030	0.024	0.000	0.095
			Total	0.000	0.320	0.080	2.660	2.000	1.571	0.000	6.631
C015158	Newport Sub	Est Lvl (e.g. +/- 25%)	CapEx	1.124	1.028	1.153	3.943	1.944	0.000	0.000	9.192
			OpEx	0.001	0.044	0.050	0.170	0.840	0.000	0.000	1.105
			Removal	0.000	0.033	0.037	0.127	0.063	0.000	0.000	0.260
			Total	1.125	1.105	1.240	4.240	2.847	0.000	0.000	10.557
C054052	N. Aquidneck Retirment	Est Lvl (e.g. +/- 25%)	CapEx	0.000	0.000	0.000	0.000	0.000	0.000	0.000	0.000
			OpEx	0.000	0.000	0.000	0.000	0.000	0.000	0.000	0.000
			Removal	0.000	0.032	0.010	0.110	0.180	0.000	0.000	0.332
			Total	0.000	0.032	0.010	0.110	0.180	0.000	0.000	0.332
C058310	Harrison Sub Improvement	Est Lvl (e.g. +/- 25%)	CapEx	0.000	0.000	0.023	0.151	0.100	0.000	0.000	0.274
			OpEx	0.000	0.000	0.012	0.025	0.015	0.000	0.000	0.052
			Removal	0.000	0.000	0.000	0.000	0.000	0.000	0.000	0.000
			Total	0.000	0.000	0.035	0.176	0.115	0.000	0.000	0.326
C058401	Merton Sub Improvements	Est Lvl (e.g. +/- 25%)	CapEx	0.000	0.052	0.023	0.155	0.104	0.000	0.000	0.334
			OpEx	0.000	0.000	0.012	0.025	0.016	0.000	0.000	0.053
			Removal	0.000	0.000	0.000	0.000	0.000	0.000	0.000	0.000
			Total	0.000	0.052	0.035	0.180	0.120	0.000	0.000	0.387
C058404	Kingston Sub Improvements	Est Lvl (e.g. +/- 25%)	CapEx	0.000	0.000	0.114	0.212	0.162	0.000	0.000	0.488
			OpEx	0.000	0.000	0.011	0.053	0.043	0.000	0.000	0.107
			Removal	0.000	0.000	0.000	0.000	0.000	0.000	0.000	0.000
			Total	0.000	0.000	0.125	0.265	0.205	0.000	0.000	0.595
C058407	S. Aquidneck Retirements	Est Lvl (e.g. +/- 25%)	CapEx	0.000	0.000	0.000	0.000	0.000	0.000	0.000	0.000
			OpEx	0.000	0.000	0.000	0.000	0.000	0.000	0.000	0.000
			Removal	0.000	0.032	0.020	0.110	0.180	0.000	0.000	0.342
			Total	0.000	0.032	0.020	0.110	0.180	0.000	0.000	0.342
CD00651	Bailey Brook Retirement	Est Lvl (e.g. +/- 25%)	CapEx	0.000	0.000	0.000	0.000	0.000	0.000	0.000	0.000
			OpEx	0.000	0.000	0.000	0.000	0.000	0.000	0.000	0.000
			Removal	0.003	0.040	0.040	0.150	0.230	0.000	0.000	0.463
			Total	0.003	0.040	0.040	0.150	0.230	0.000	0.000	0.463
CD00652	Vernon Retirement	Est Lvl (e.g. +/- 25%)	CapEx	0.000	0.000	0.023	0.109	0.108	0.000	0.000	0.240
			OpEx	0.000	0.000	0.003	0.014	0.014	0.000	0.000	0.031
			Removal	0.000	0.000	0.003	0.014	0.014	0.000	0.000	0.031
			Total	0.000	0.000	0.029	0.137	0.136	0.000	0.000	0.302
CD00656	Jepson Substation	Est Lvl (e.g. +/- 10%)	CapEx	0.135	0.161	0.105	4.080	4.000	4.000	0.000	12.481
			OpEx	0.000	0.020	0.013	0.510	0.500	0.500	0.000	1.543
			Removal	0.000	0.020	0.013	0.510	0.500	0.500	0.000	1.543
			Total	0.135	0.201	0.131	5.100	5.000	5.000	0.000	15.567
Total Project Sanction			CapEx	3.971	3.676	5.247	15.705	11.978	5.523	0.000	46.100
			OpEx	0.063	0.277	0.381	1.161	1.911	0.524	0.000	4.317
			Removal	0.060	0.583	0.774	1.819	1.650	0.524	0.000	5.410
			Total	4.094	4.536	6.402	18.685	15.539	6.571	0.000	55.827

3.11.2 Project Budget Summary Table

Project Costs per Business Plan

		Current Planning Horizon						
	Prior Yrs	Yr. 1	Yr. 2	Yr. 3	Yr. 4	Yr. 5	Yr. 6 +	
$M	(Actual)	2016/17	2017/18	2018/19	2019/20	2020/21	2021/22	Total
CapEx	3.971	2.882	7.225	16.687	11.600	1.200	0.000	43.565
OpEx	0.063	0.190	0.426	1.088	0.783	0.036	0.000	2.586
Removal	0.060	0.361	0.544	1.499	1.508	0.024	0.000	3.996
Total Cost in Bus. Plan	4.094	3.433	8.195	19.274	13.891	1.260	0.000	50.147

Variance (Business Plan-Project Estimate)

		Current Planning Horizon						
	Prior Yrs	Yr. 1	Yr. 2	Yr. 3	Yr. 4	Yr. 5	Yr. 6 +	
$M	(Actual)	2016/17	2017/18	2018/19	2019/20	2020/21	2021/22	Total
CapEx	0.000	(0.794)	1.978	0.982	(0.378)	(4.323)	0.000	(2.535)
OpEx	0.000	(0.087)	0.045	(0.073)	(1.128)	(0.488)	0.000	(1.731)
Removal	0.000	(0.222)	(0.230)	(0.320)	(0.142)	(0.500)	0.000	(1.414)
Total Cost in Bus. Plan	0.000	(1.103)	1.793	0.589	(1.648)	(5.311)	0.000	(5.680)

3.11.3 Cost Assumptions

Substation estimates were obtained from Conceptual Engineering Reports prepared by substation engineering. Conceptual Grade Estimates have been developed with only the conceptual understanding of the project. The estimates have been prepared using historical cost data or data from similar projects with an accuracy of -25% to +50%.

The estimate for the [redacted] line was obtained from Routing Analysis Report prepared by transmission line engineering and consultants to the company. This Conceptual Engineering Estimate has been developed with only the conceptual understanding of the project. The estimates have been prepared using historical cost data or data from similar projects with an accuracy of -25% to +50%.

The overall distribution line work estimate was developed utilizing generic construction costs. Minimal field work has been performed to assess the actual condition of the assets or the number of poles and transformers needing replacement associated with the conversion from 4kV to 13kV. This is an Investment Grade Estimate with a level of accuracy ranging from -50% to +200%.for

The estimates for the distribution work to be completed under funding C028628 and CD00649 are based on STORMS estimate.

3.11.4 Net Present Value / Cost Benefit Analysis

N/A

3.11.5 Additional Impacts

N/A

3.12 Statements of Support

None

3.12.1 Supporters

The supporters listed have aligned their part of the business to support the project.

Role	Individual	Responsibilities
Investment Planning	Glen DiConza	Endorses relative to distribution 5-year business plan or emergent work
Resource Planning	Anne Wyman	Endorses D-Line resources, cost estimate, schedule and portfolio alignment
Resource Planning	Mark Phillips	Endorses substation resources, cost estimate, schedule and portfolio alignment
Asset Management/ Planning	Kasia Kulbacka	Endorses scope, estimate, and schedule with the company's goals, strategies, and objectives
Asset Management/ Planning	Alan Labarre	Endorses scope, estimate, and schedule with the company's goals, strategies, and objectives
Engineering / Design	Suzan Martuscello	Endorses substation scope, design, conformance with design standards
Engineering / Design	Mark Browne	Endorses sub-transmission line scope, design, conformance with design standards
Engineering / Design	Len Swanson	Endorses substation scope, design, conformance with design standards
Project Management	Andrew Schneller	Endorses Resources, cost estimate, schedule

3.12.2 Reviewers

The reviewers have provided feedback on the content/language of the paper.

Function	Individual
Finance	Keith Fowler / Phillip Horowitz
Regulatory	Peter Zschokke
Jurisdictional Delegates	Jim Patterson
Procurement	Art Curran
Control Center	Michael Gallagher
Control Center	Will Houston

4 Appendices

4.1 Sanction Request Breakdown by Project

$M	C028628	CD00649	C024159	C054054	C015158	C054052	C058310	CD00656	CD00652	CD058404	C058407	C058401	CD00651	Total
CapEx	5.623	2.200	0.200	0.800	1.000		0.050	2.100		0.600		0.050		12.623
OpEx	0.423													0.423
Removal	0.647	0.044				0.050			0.050		0.050		0.050	0.891
Total	6.693	2.244	0.200	0.800	1.000	0.050	0.050	2.100	0.050	0.600	0.050	0.050	0.050	13.937

4.2 Other Appendices

N/A

4.3 NPV Summary

N/A

4.4 Customer Outreach Plan

A Customer Outreach is ongoing as part of the Energy Facilities Siting Board (EFSB) Filing process. The company has hired a consultant to develop a comprehensive public outreach plan for all of proposed projects on Aquidneck Island.

This outreach effort will be part of a comprehensive and proactive public outreach process to establish and maintain communications with stakeholders (e.g., project abutters, residents, businesses, federal, state and local officials, and community groups).

This process will include opportunities for public education and communication regarding the need for the Project, the permitting and siting processes, the detailed construction plans, the dissemination of construction updates and outreach prior to and during construction, and follow-up outreach after Project completion. The process will be designed to engage the community in a two-way dialogue, facilitate transparency throughout the Project, foster public participation, and solicit feedback from stakeholders.

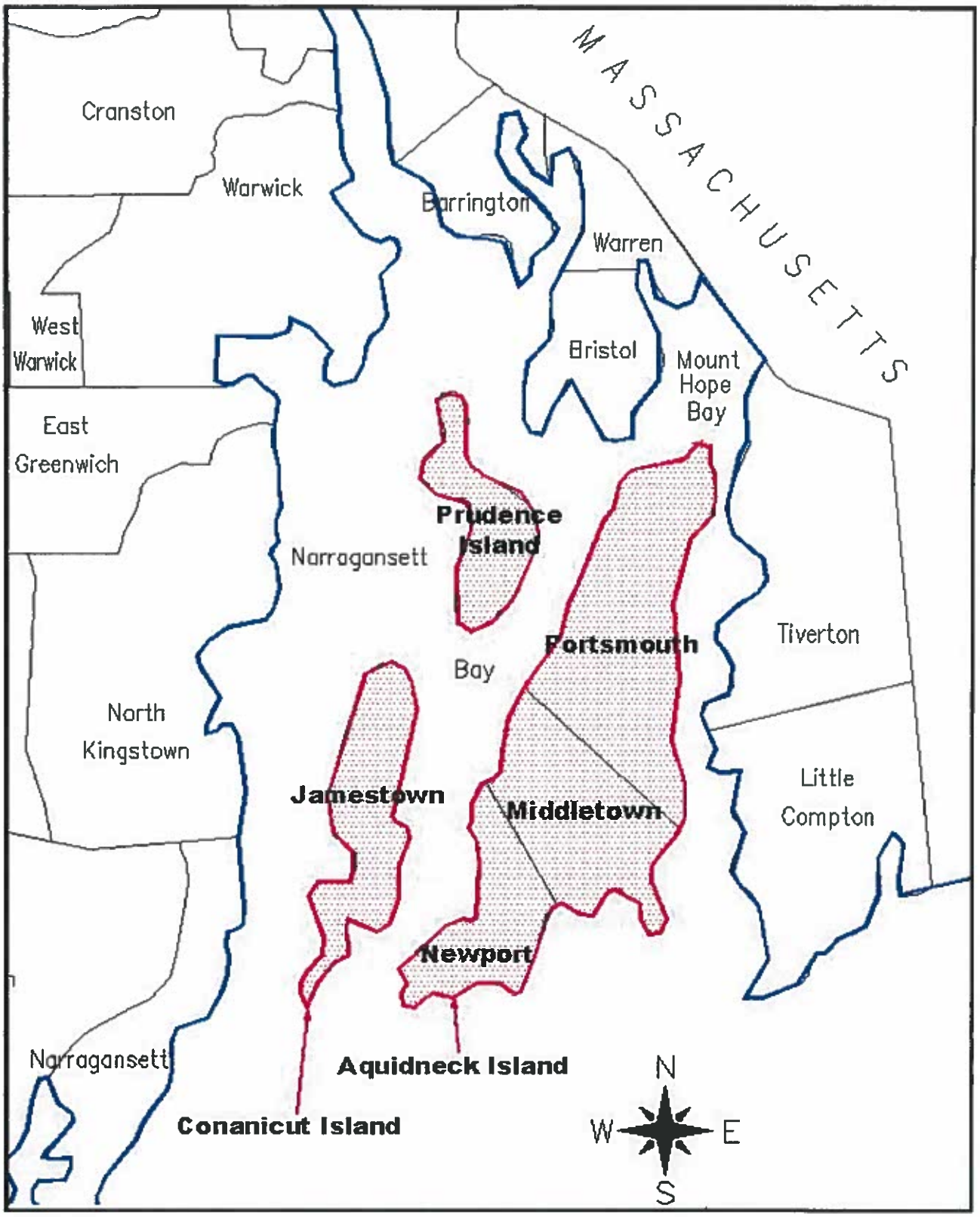

FIGURE 1 – GEOGRAPHIC AREA MAP

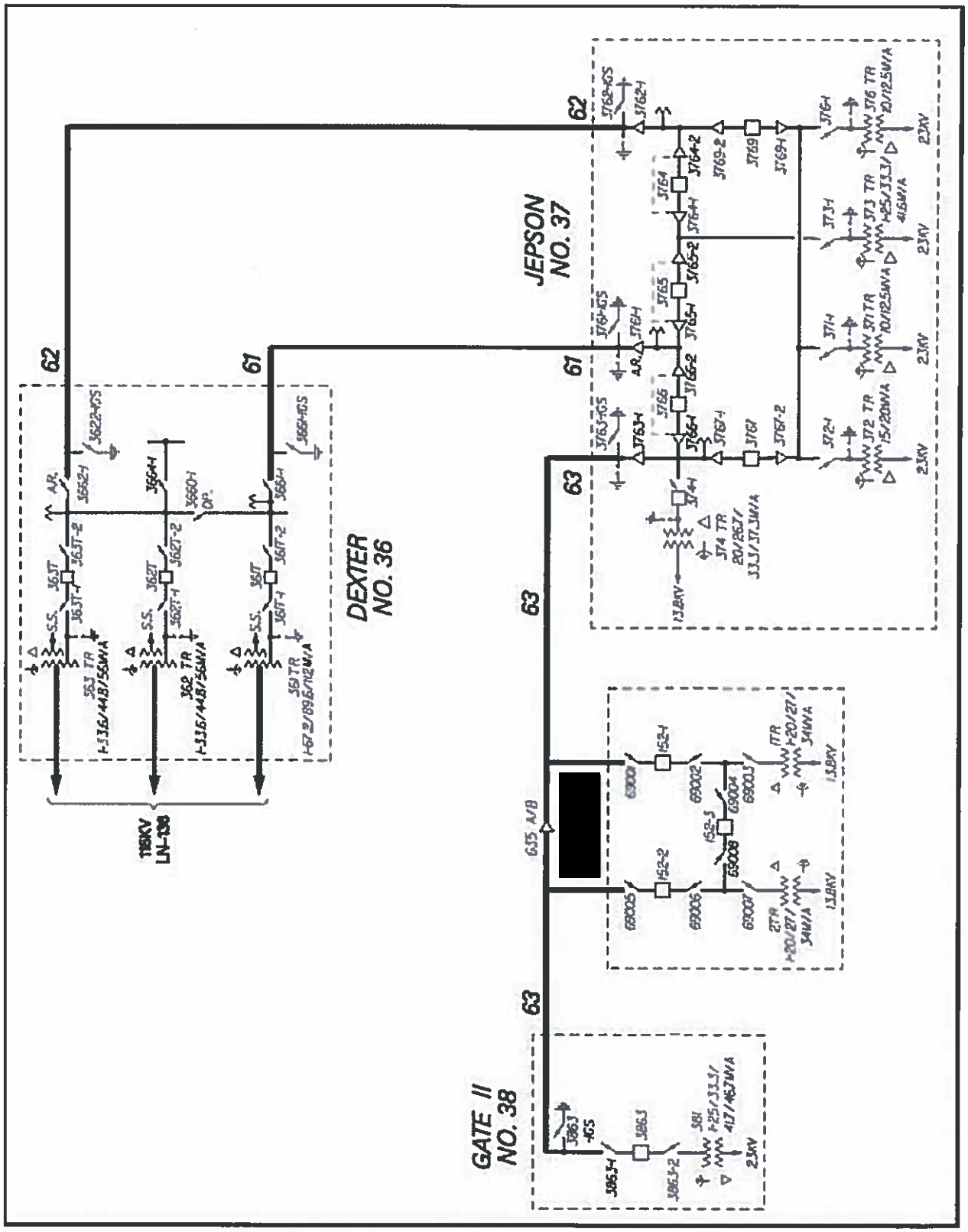

FIGURE 2 – EXISTING TRANSMISSION SYSTEM ONE-LINE DIAGRAM

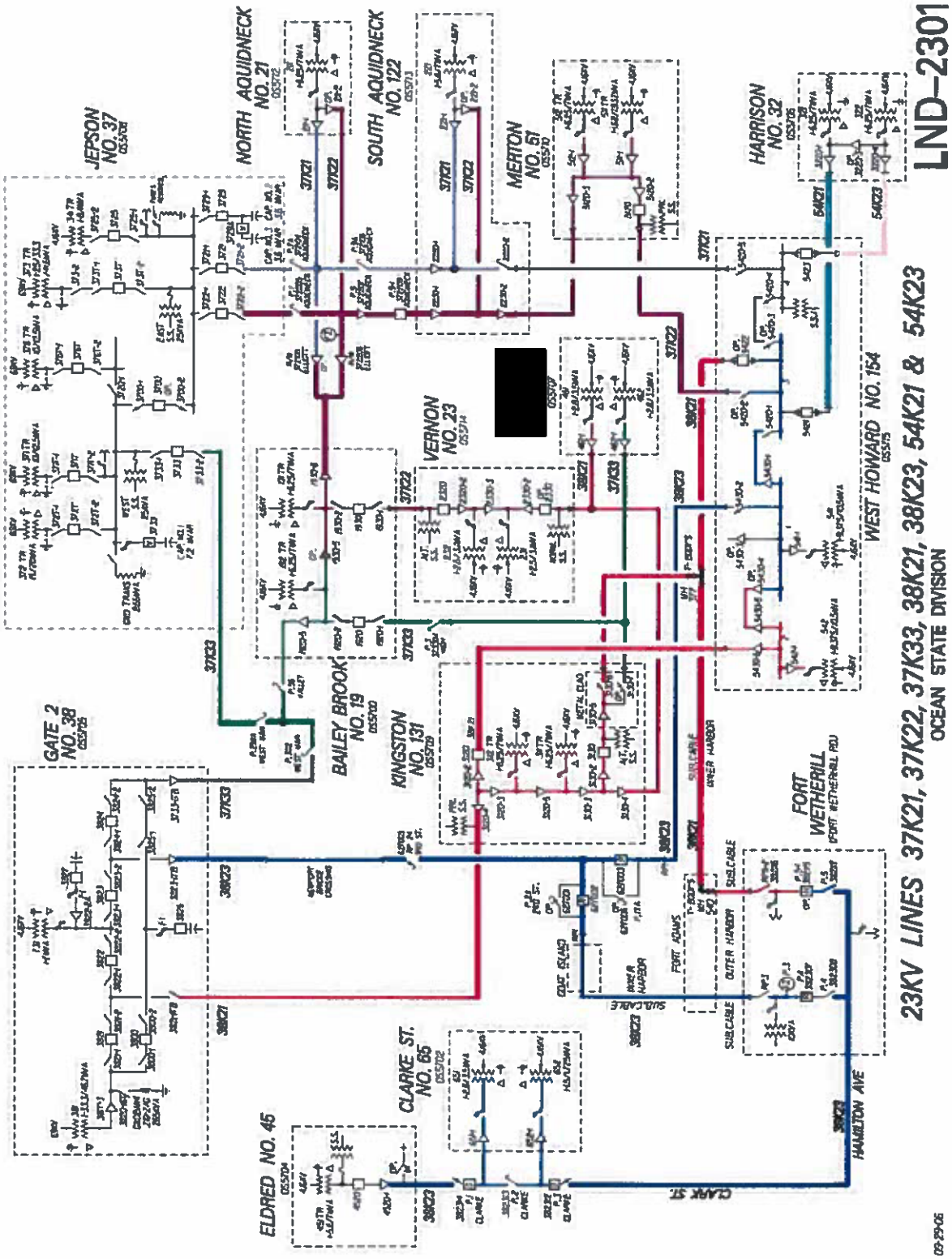

FIGURE 3 – EXISTING SUB-TRANSMISSION SYSTEM ONE-LINE DIAGRAM

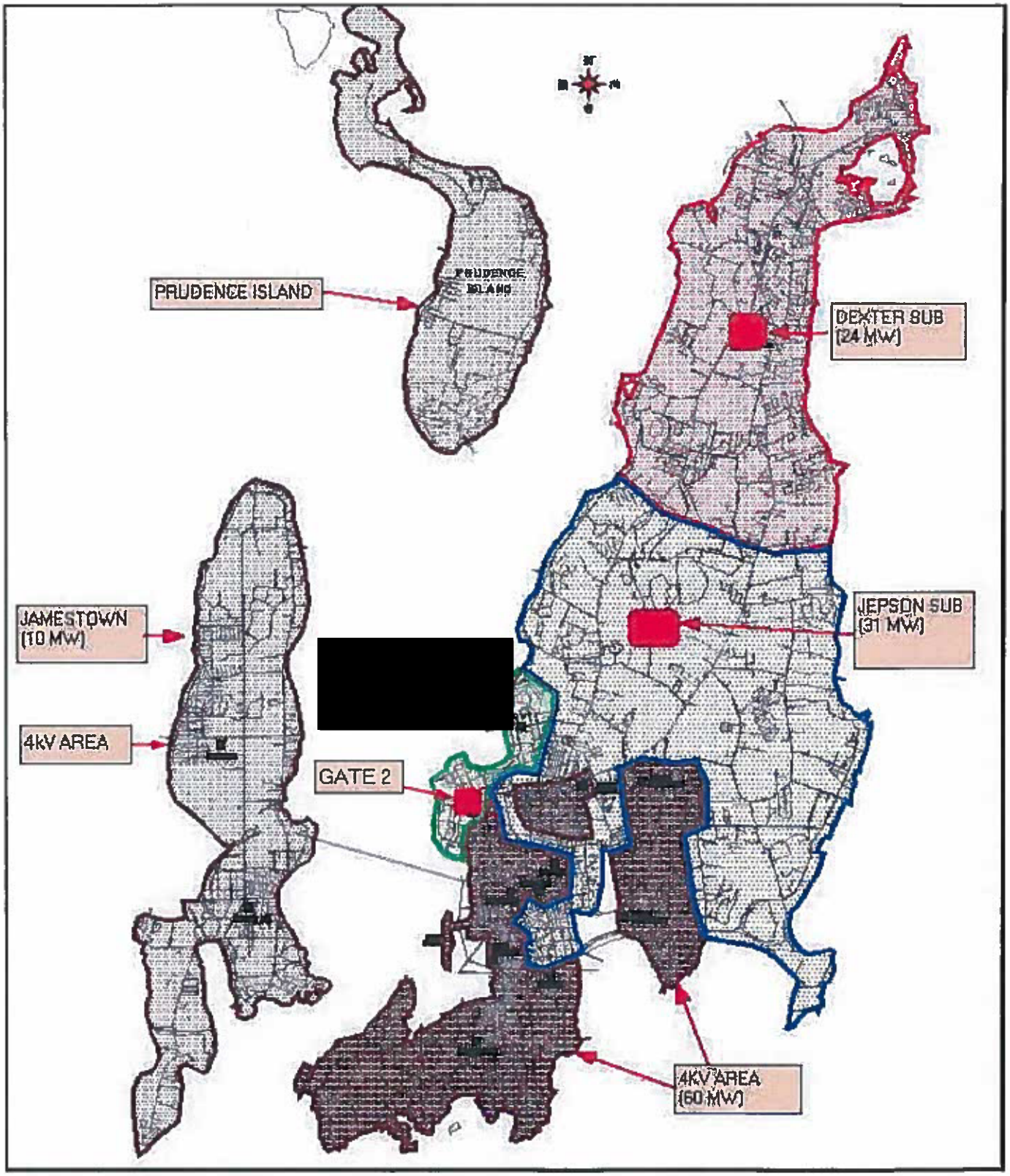

FIGURE 4 – GEOGRAPHIC MAP OF EXISTING DISTRIBUTION

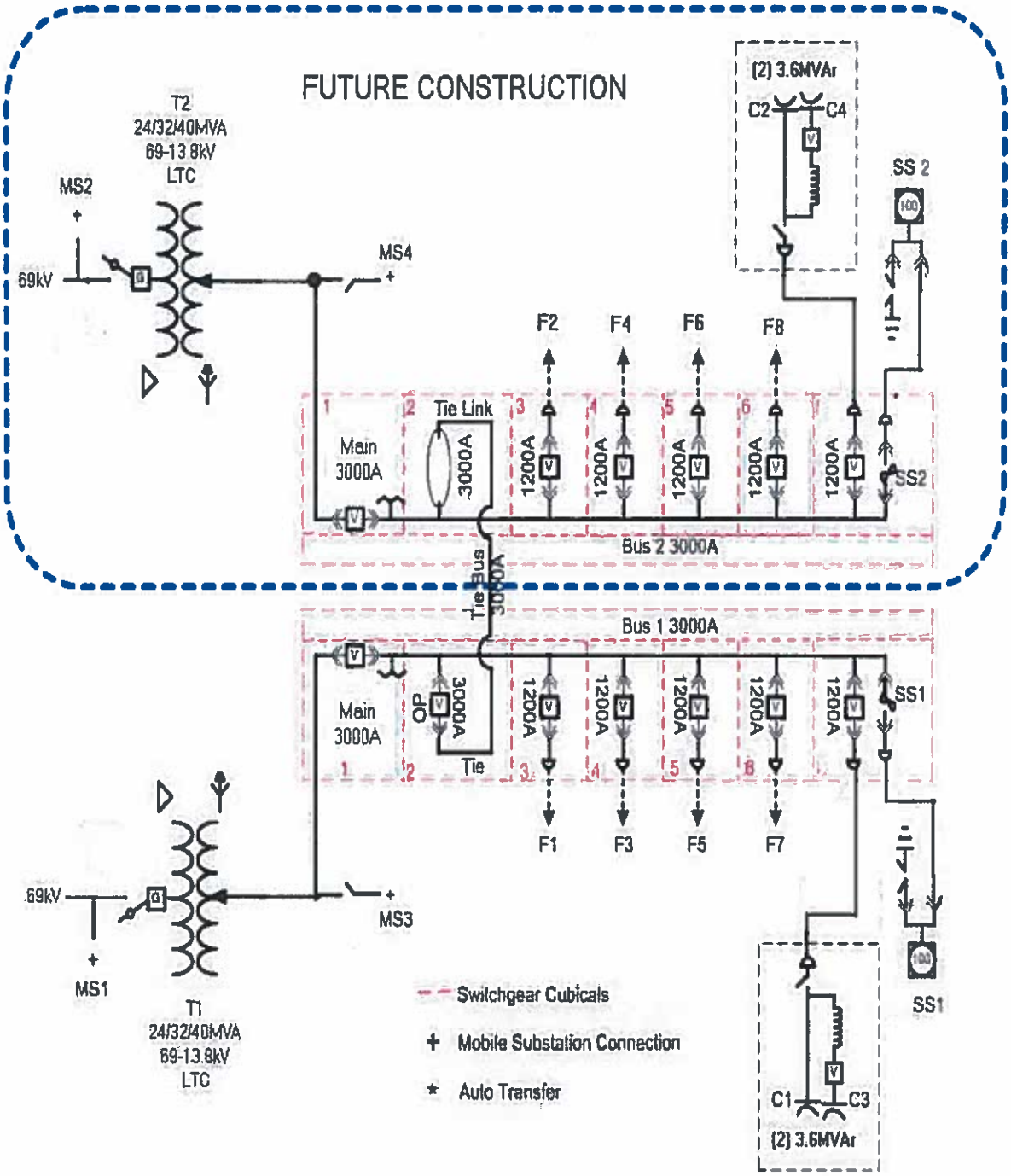

FIGURE 5 – NEWPORT 69/13.8kV SUBSTATION PROPOSED ONE-LINE

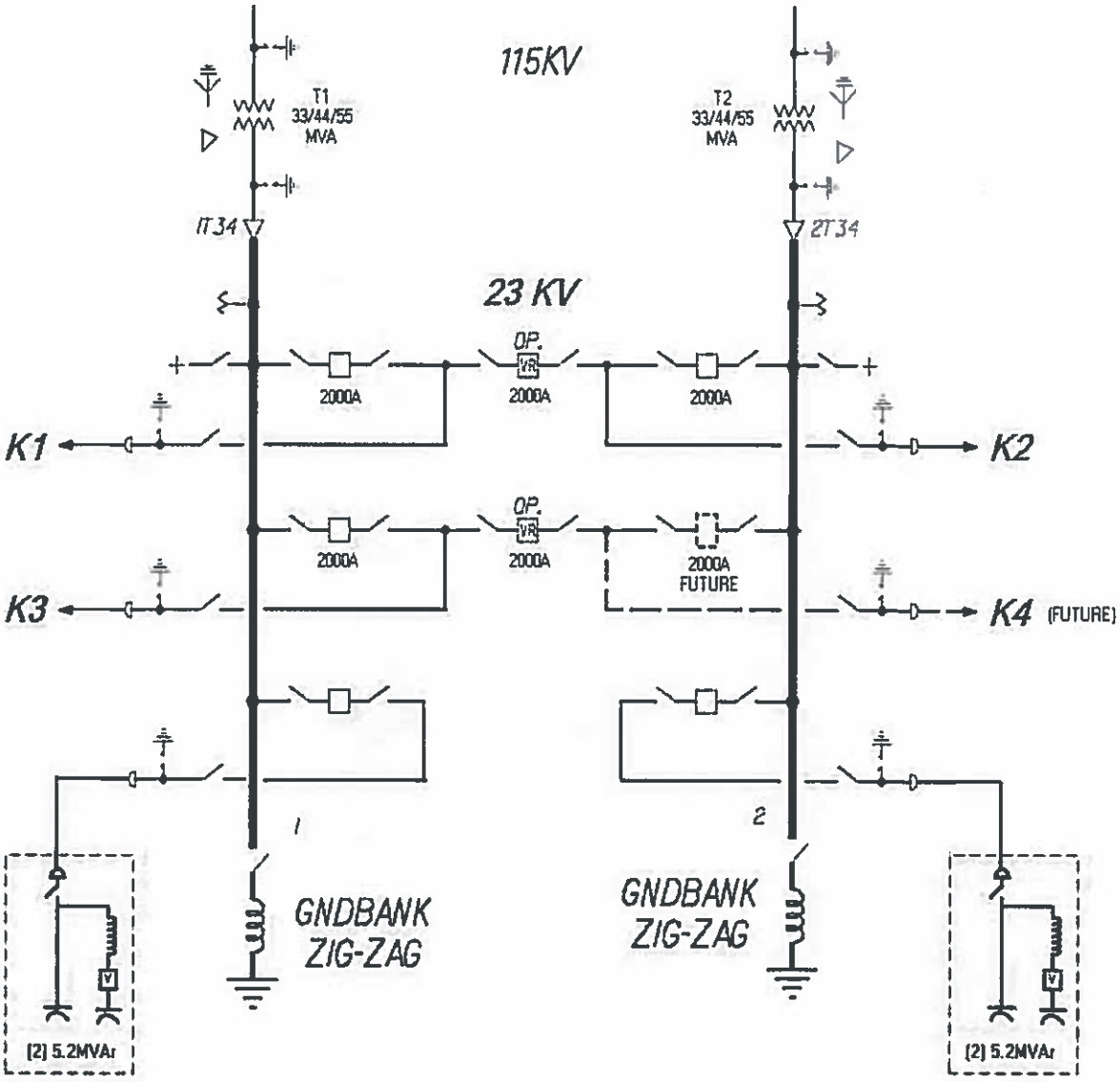

FIGURE 6 – MIDDLETOWN 115/23kV SUBSTATION PROPOSED ONE-LINE

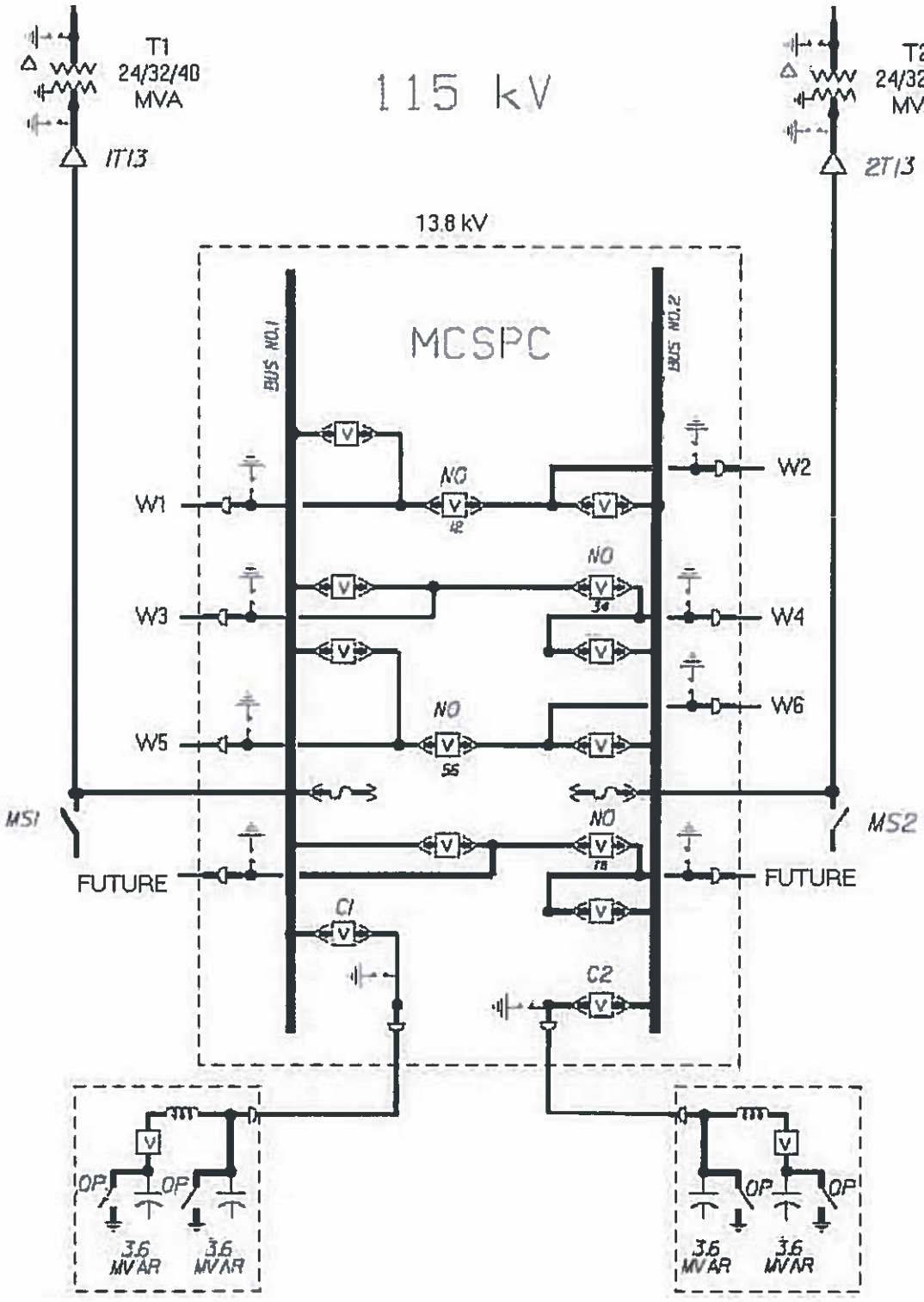

FIG 7 – MIDDLETOWN 115/13.8kV SUBSTATION PROPOSED ONE-LINE

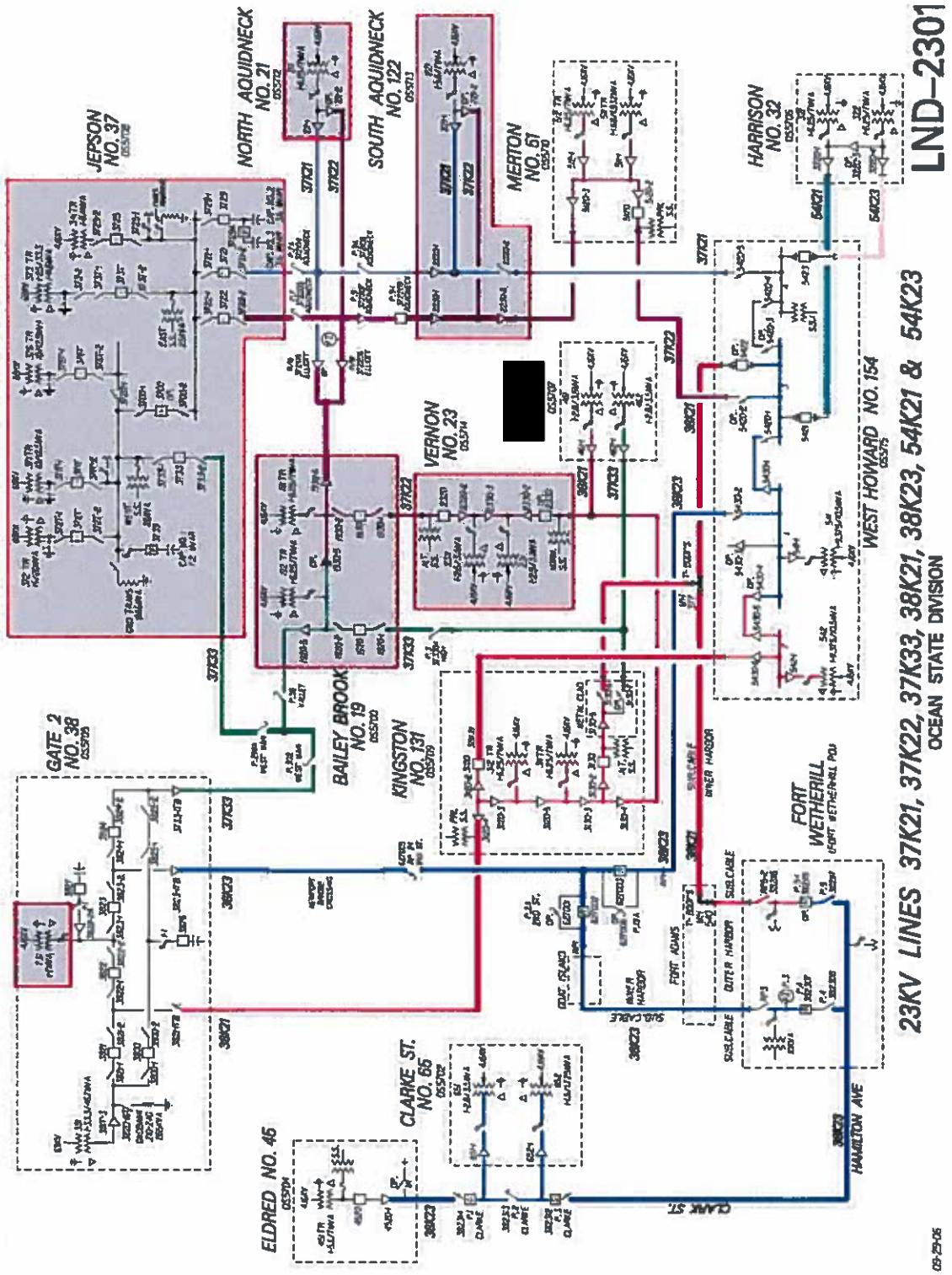

FIGURE 8 – PROPOSED STATION RETIREMENTS

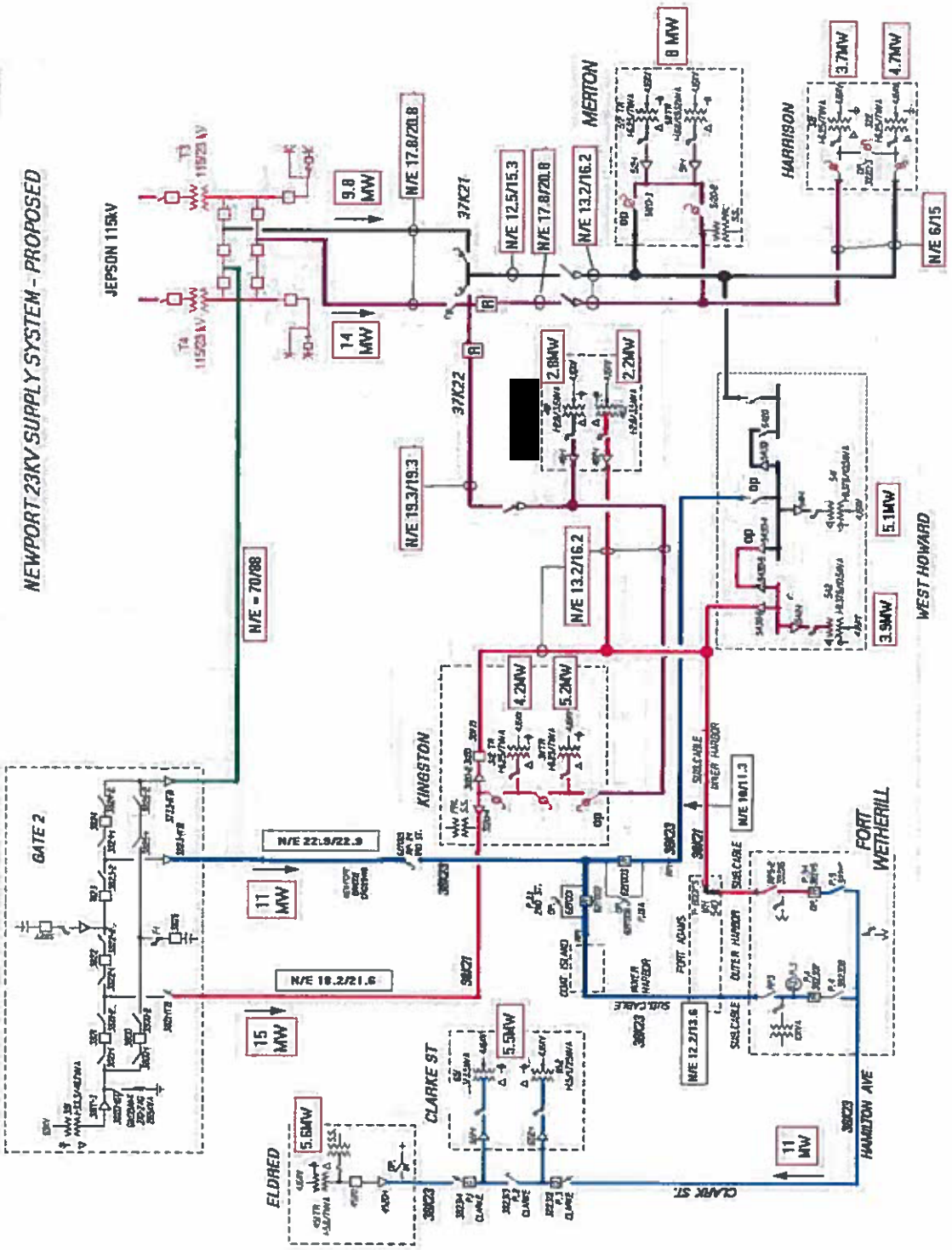

FIG 9 – PROPOSED SUBTRANSMISSION SYSTEM ONE-LINE

US Sanction Paper

nationalgrid

Title:	Aquidneck Island	**Sanction Paper #:**	USSC-14-262
Project #:	See Section 1.3 Below	**Sanction Type:**	Partial Sanction
Operating Company:	The Narragansett Electric Co.	**Date of Request:**	12/10/14
Author:	Jack Vaz	**Sponsor:**	John Gavin VP Asset Management
Utility Service:	Electricity T&D	**Project Manager:**	Ayo Osimboni

1 Executive Summary

1.1 Sanctioning Summary

This paper requests partial sanction in the amount of $10.000M and a tolerance of ±10% for the projects listed in section 1.3 below. This sanction amount will provide funding for all engineering activities, procurement of long lead materials, permitting, and to initiate construction activities.

The sanction amount of $10.000M is broken down into:

$ 9.400M	Capex
$ 0.200M	Opex
$ 0.400M	Removal

NOTE the potential investment of $53.585M and a tolerance of ±25%, contingent upon submittal and approval of a Project Sanction paper following completion of all engineering activities.

1.2 Project Summary

Aquidneck Island is supplied by a highly utilized supply and distribution system. It is increasingly challenging to supply load in southern Middletown and in the City of Newport. The Jepson 13.8kV system has been utilized to provide relief to the 23kV supply system and the 4.16kV distribution system. However, this 13.8kV system has been extended to its limits.

[redacted]

To address these concerns, the recommended plan is to:

- Build a [redacted] feeder at Gate 2 substation in the City of Newport with a recommended in-service date of May 2016. This investment is required to provide short-term relief to the City of Newport.
- Build a [redacted] substation in Newport (Newport Substation) with a recommended in-service date of May 2018. The substation will consist of a single transformer supplying four (4) 13.8kV feeders.
- Build a new substation in Middletown (Jepson Substation) with a recommended in-service date of May 2019. The substation will consist of two (2) transformers supplying six (6) 13.8kV feeders and two (2) transformers supplying three (3) 23kV supply lines.
- Upgrade the 37K33 supply line from the [redacted] station in Middletown to Gate 2 substation. This investment increases the 23kV supply capacity to the City of Newport.

A number of small 23/4.16kV substations will be retired in Newport and Middletown to address asset condition, safety, environmental, and thermal concerns. The stations to be retired are Bailey Brook, Jepson, North Aquidneck, South Aquidneck, and Vernon. These substation retirements are part of a comprehensive plan for Aquidneck Island that addresses all concerns at least cost.

The supply to three Newport 23/4.16kV stations (Harrison, Kingston and Merton) will be improved by replacing air break switches with EMS controlled motorized load breaks. These improvements will allow EMS control of a preferred and alternative supply to the stations to reduce restoration time in the event of a supply line outage.

1.3 Summary of Projects

Project Number	Project Type (Elec only)	Project Title	Estimate Amount ($M)
C015158	D-Sub	Newport Substation (D-Sub)	7.955
C028628	D-Line	Newport Substation (D-Line)	16.000
CD00656	D-Sub	Jepson Substation (D-Sub)	17.400
C054054	D-Line	Jepson Substation (D-Line)	6.700
C024159	D-Line	Newport [redacted]Line 63 (D-Line)	0.900
CD00649	D-Sub	Gate 2 Substation (D-Sub)	2.000
CD00651	D-Sub	Bailey Brook Retirement (D-Sub)	0.430
CD00652	D-Sub	Vernon Retirement (D-Sub)	0.300
C058401	D-Sub	Merton Sub Improvements (D-Sub)	0.350
C058310	D-Sub	Harrison Sub Improvements (D-Sub)	0.350
C058404	D-Sub	Kingston Sub Improvements (D-Sub)	0.600
C054052	D-Sub	No. Aquidneck Retirement (D-Sub)	0.300
C058407	D-Sub	So. Aquidneck Retirement (D-Sub)	0.300
		Total	53.585

1.4 Associated Projects

Project Number	Project Type (Elec only)	Project Title	Estimate Amount ($M)
C041183	T-Sub	Jepson [redacted]	$13.20
C041184	T-Line	Line 61/62 Conversion [redacted]	$22.70
C041185	T-Sub	Dexter [redacted]	$3.90
		Total	$39.80

NOTE: [redacted] These projects are part of a separate sanction.

1.5 Prior Sanctioning History

Date	Governance Body	Sanctioned Amount	Potential Project Investment	Paper Title	Sanction Type	Tolerance
11/09/2011	USSC	$15.000M	$42.00M	Aquidneck Island	Partial	-25% +50%
12/03/2008	DCIG	$15.500M	$15.50M	Substation Installation Project	Sanction	+/- 25%
04/02/2008	DCIG	$3.500M	$12.30M	Newport Substation Installation	Strategy	+/- 25%
10/11/2005	Power Plant	$1.000M	N.A.	Newport Land Purchase	Strategy	N.A.

1.6 Next Planned Sanction Review

Date (Month/Year)	Purpose of Sanction Review
Feb 2018	Project Sanction

1.7 Category

Category	Reference to Mandate, Policy, NPV, or Other
○ Mandatory ◉ Policy- Driven ○ Justified NPV ○ Other	National Grid USA Internal Strategy Document Distribution Planning Criteria Strategy Issue 1 – February 2011

1.8 Asset Management Risk Score

Asset Management Risk Score: **41**

Primary Risk Score Driver: (Policy Driven Projects Only)

◉ Reliability ○ Environment ○ Health & Safety ○ Not Policy Driven

1.9 Complexity Level

◉ High Complexity ○ Medium Complexity ○ Low Complexity ○ N/A

Complexity Score: **33**

1.10 Process Hazard Assessment

A Process Hazard Assessment (PHA) is required for this project:

○ Yes ◉ No

1.11 Business Plan

Business Plan Name & Period	Project included in approved Business Plan?	Over / Under Business Plan	Project Cost relative to approved Business Plan ($)
Dist - Current 5 year Spending Plan FY15-19 Budget	◉ Yes ○ No	◉ Over ○ Under ○ NA	$35.972M

1.12 If cost > approved Business Plan how will this be funded?

Inclusion of dollars in future plans and approval by Rhode Island PUC through the annual ISR Approval process will be required.

1.13 Current Planning Horizon

		Current Planning Horizon						
$M	Prior Yrs	Yr. 1 2014/15	Yr. 2 2015/16	Yr. 3 2016/17	Yr. 4 2017/18	Yr. 5 2018/19	Yr. 6 + 2019/20	Total
CapEx	0.523	0.620	2.410	4.990	13.730	15.187	8.775	46.235
OpEx	0.010	0.020	0.170	0.290	0.400	0.580	0.280	1.750
Removal	0.004	0.040	0.355	1.190	1.261	1.370	1.380	5.600
CIAC/Reimbursement	0.000	0.000	0.000	0.000	0.000	0.000	0.000	0.000
Total	0.537	0.680	2.935	6.470	15.391	17.137	10.435	53.585

1.14 Key Milestones

Milestone	Target Date: (Month/Year)
Engineering Design Complete Gate 2 Feeder	May 2015
Engineering Design Complete Newport Substation	May 2016
Engineering Design Complete Jepson Substation	Apr 2017
Engineering Design Complete 4kV Station Upgrades	Jun 2017
Engineering Design Complete Station Retirements	Dec 2017
Project Sanction	Feb 2018
Construction Start - Gate 2 Feeder	Aug 2015
Construction Complete - Gate 2 Feeder	May 2016
Ready for Load - Gate 2 Feeder	Jun 2016
Construction Start - Newport Substation	Aug 2016
Construction Complete - Newport Substation	Mar 2018
Ready for Load - Newport Substation	Apr 2018
EFSB Filing - [redacted]	Feb 2015
EFSB Decision - [redacted]	Sep 2016
Construction Start – Jepson Substation	Jul 2017
Construction Complete – Jepson Substation	Sep 2019
Ready for Load - Jepson Substation	Oct 2019
Construction Start – 4kV Station Upgrades	Jul 2018
Construction Complete – 4kV Station Upgrades	Mar 2019
Construction Start – 4kV Station Retirements	Jun 2018
Construction Complete – 4kV Station Retirements	Mar 2020
Project Closure Report	Jun 2020

1.15 Resources, Operations and Procurement

Resource Sourcing			
Engineering & Design Resources to be provided	☑ Internal		☑ Contractor
Construction/Implementation Resources to be provided	☑ Internal		☑ Contractor
Resource Delivery			
Availability of internal resources to deliver project:	○ Red	○ Amber	◉ Green
Availability of external resources to deliver project:	○ Red	○ Amber	◉ Green
Operational Impact			
Outage impact on network system:	○ Red	○ Amber	◉ Green
Procurement Impact			
Procurement impact on network system:	○ Red	○ Amber	◉ Green

1.16 Key Issues (include mitigation of Red or Amber Resources)

1	State and local permits are required to build Newport substation and the distribution line work.
2	An Energy Facility Siting Board (EFSB) Filing is required for the proposed Jepson substation.
3	[redacted] approval is required to build the 13.8kV feeder at Gate 2 substation and to build the [redacted]ap to proposed Newport substation.
4	A major public outreach effort is required for communities impacted by the substation construction and distribution line construction and conversion work.
5	Coordination with RIDOT is required to review compliance with the Americans with Disabilities Act (ADA) for new pole sets or pole replacements.
6	A traffic mitigation plan is required for the distribution line construction and the proposed conversion work.

REDACTED

1.17 Climate Change

Contribution to National Grid's 2050 80% emissions reduction target:	◉ Neutral	○ Positive	○ Negative
Impact on adaptability of network for future climate change:	◉ Neutral	○ Positive	○ Negative

1.18 List References

1	Distribution Planning Criteria Strategy, Issue 1, February 2011
2	Conceptual Engineering Report, Newport Mall Substation, 7/20/11
3	Conceptual Engineering Report, Gate 2 Substation, 7/21/11
4	Conceptual Engineering Report, Jepson Substation, 7/22/11
5	Conceptual Engineering Report, Bailey Brook Substation, 7/25/11
6	Conceptual Engineering Report, Vernon Substation, 7/25/11
7	Newport Area Supply and Distribution Study, May 2007
8	Jepson Equipment Condition Assessment, February 2005

REDACTED

2 Decisions

The US Sanctioning Committee (USSC) at a meeting held on 12/10/14:

(a) APPROVED the investment of $10.000M and a tolerance of +/- 10 %. This sanction amount will provide funding for all engineering activities, procurement of long lead materials, permitting, and to initiate construction activities.

(b) NOTE the potential investment of $53.585M and a tolerance of +/- 25%, contingent upon submittal and approval of a Project Sanction paper following completion of all engineering activities.

(c) NOTED that Ayo Osimboni has the approved financial delegation to undertake the activities stated in (a).

Signature.....Date 12/15/14

Margaret Smyth
US Chief Financial Officer
Chair, US Sanctioning Committee

3 *Sanction Paper Detail*

Title:	Aquidneck Island	**Sanction Paper #:**	USSC-14-262
Project #:	See Section 1.3	**Sanction Type:**	Partial Sanction
Operating Company:	The Narragansett Electric Co.	**Date of Request:**	12/10/14
Author:	Jack Vaz	**Sponsor:**	John Gavin VP Asset Management
Utility Service:	Electricity T&D	**Project Manager:**	Ayo Osimboni

3.1 Background

The Newport Study Area encompasses the City of Newport and the towns of Portsmouth, Middletown, Jamestown and Prudence Island. Figure 1 shows a geographic map of the study area. The area has approximately 34,000 customers with a peak load of 146MW. Aquidneck Island has most of the load and peaks at 135MW, Jamestown peaks at 10MW and Prudence Island at 1MW.

The area is supplied by [redacted] lines (L14 & M13) which terminate on the northern half of Aquidneck Island at Dexter substation. From Dexter substation, [redacted] lines (Lines 61 & 62) continue south to supply Jepson substation. From Jepson substation, [redacted] line (Line 63) continues south to supply [redacted] Gate 2 Substation. Figure 2 shows a one-line of the existing transmission system.

[redacted] The remainder of the load is supplied by five (5) 23kV lines sourced from Jepson and Gate 2 substations which supply a 4.16kV distribution system with approximately 70MW of load. Twelve 23/4.16kV substations, ten located in the southern half of Aquidneck Island and two in Jamestown, supply this 4.16kV system. Figure 3 shows a one-line of the existing sub-transmission system and Figure 4 shows the approximate geographic areas supplied by the distribution system.

Interruptions to the Newport electrical system resulting in significant customer outages occurred in the summer of 2003. One of the action items proposed by the Company to the Rhode Island Public Utility Commission (RI PUC) was to conduct a planning study to identify and resolve electrical related issues in the area.

This area study was published in May 2007 and titled "The Newport Area Supply and Distribution Study". The Study identified an immediate need to build a new substation

in the City of Newport to address both normal and contingency overloads. The study recommended construction of a new substation consisting of a single transformer supplying four (4) 13.8kV feeders. The new station was to be sourced from Line 63, a radial [redacted] supply line that supplies the [redacted] Gate 2 substations.

Construction of a new substation was contingent on the company acquiring a parcel of land in Newport for this substation. The Company encountered significant challenges in acquiring a suitable land parcel which has impacted the in-service date of this substation. To address critical loading concerns in the City of Newport, the 2008 Annual Plan recommended accelerating some of the distribution construction identified in the 2007 study and recommended redistributing the area load on the supply and distribution systems to optimize all available capacity. All recommended investments are complete.

In 2011, the Company purchased a parcel of land in the City of Newport suitable for a new substation. The company successfully worked with the city to amend the zoning ordinance to allow a substation to be built via a special permit. The substation site is encumbered by a lease that expires in the fall of 2016. Therefore substation construction is projected to start in early 2017 with an in-service date of spring 2018.

Transmission Planning has recently completed a review of the Aquidneck Island transmission supply system. This review identified various n-1 thermal overloads and voltage issues throughout Aquidneck Island. [redacted] The review also identified various asset condition, safety, and environmental concerns with Jepson substation.

Jepson substation consists of a [redacted] The station is located within the 100 year floodplain and directly adjacent to Sisson Pond and entirely within Zone A Watershed Protection Overlay. The station will be rebuilt on company owned land in Middletown and outside the 100 year floodplain and the Zone A Watershed Protection Overlay. The existing station will be retired and all equipment removed.

[redacted] The existing 23/4.16kV station will be retired and load converted to the 13.8kV system. This is the most economical approach as opposed to building a new 23/4.16kV station in Middletown.

3.2 Drivers

Aquidneck Island is supplied by a highly utilized supply and distribution system. It is increasingly challenging to supply load in southern Middletown and in the City of Newport. The Jepson 13.8kV system has been utilized to provide relief to the 23kV

supply system and the 4.16kV distribution system. However, this 13.8kV system has been extended to its limits.

The 23kV supply system is a mixture of overhead and underground construction in Middletown and predominantly underground construction in Newport. [redacted] The 3-inch ducts are not suitable to house required solid dielectric cables, making upgrades to the 23kV supply system challenging and costly.

[redacted]

A number of 23/4.16kV stations in the area have asset condition, safety, environmental, and thermal concerns which need to be addressed. The recommendation is to retire these stations. This recommendation is part of a comprehensive solution developed for Aquidneck Island to address all concerns at least cost.

In the summer of 2003, interruptions to the electrical system in Newport resulted in significant customer outages. One of the action items proposed by the Company to the Rhode Island Public Utility Commission was to conduct a planning study to identify and resolve electrical related issues in the area.

3.3 Project Description

Install a [redacted] feeder at Gate 2 substation in the City of Newport with a recommended in-service date of May 2016. This feeder addresses near-term thermal concerns in Newport until a new substation is built to provide the required long-term relief. All the work associated with this feeder is in-line with the long-term plan for the area resulting in no out of line expenditures.

Build a [redacted] substation in Newport on a parcel of land recently purchased for this purpose. The substation will consist of a single transformer supplying four (4) 13.8kV feeders. [redacted]. A one-line of the proposed station is shown on Figure 5.

Build a new substation in Middletown (Jepson Substation) on company owned land. The substation will consist of [redacted] six (6) feeders [redacted]

[redacted]

The 23kV supply system on Aquidneck Island needs relief. The most economical approach is to retire a number of 23/4.16kV stations and to convert the load to the 13.8kV system. This approach addresses asset condition, safety, environmental, thermal, and reliability concerns with these assets at least cost. This approach is part of a comprehensive solution that eliminates the need to install a [redacted] line to Newport (a $32M investment). This approach retires four 23/4.16kV stations which include:

- Vernon substation is a metal-clad station built in 1949. It has two transformers, TR231 installed in 1949 and TR232 installed in 1963. The metal-clad switchgear is obsolete and needs to be replaced to address safety & reliability concerns. Station breakers are obsolete and the TR231 needs to be replaced due to poor condition. The estimated cost to rebuild this station is $4.90M. The retirement of this station eliminates this $4.9M investment.

- Bailey Brook was built in 1941 on a small site with no room for expansion. It is located within local wetlands and adjacent to a brook that is the source of island water supply. Rebuilding the station outside the floodplain is not an economical approach because station is located in downtown Middletown and in a congested area. Locating and permitting a new site is not practical or economical. There is no economic or reliability benefit to keeping this station.

- South Aquidneck is a metal-clad station located within the flood plain. It has a single LTC transformer supplying 3-feeders. The station breakers are obsolete along with the station insulators and arresters. The estimated cost to address these concerns is $0.80M. However, this station cannot be offloaded due to lack of feeder ties and because the site is too small to install a mobile transformer. The LTC is an arcing in oil design which requires a higher level of maintenance.

- North Aquidneck is a metal-clad station with a single transformer supplying 3-feeders. The station has non-standard breakers and limited EMS. The LTC is an arcing in oil design which requires a higher level of maintenance. Station has similar offloading challenges to South Aquidneck making station maintenance very challenging.

The retirement of these 4.16kV station increases the reliability on the 13.8kV distribution system with increased feeder ties. The conversion of the 4.16kV load to 13.8kV also reduces line losses by approximately 90%. A one-line of the proposed station retirements is shown on Figure 8.

3.4 Benefits Summary

The recommended plan is in-line with commitments made by the Company to state regulators. The plan is part of a comprehensive solution for Aquidneck Island and

addresses all asset condition, safety, environmental, thermal, and reliability concerns at the least cost.

Plan introduces new 13.8kV capacity in the heart of the existing Newport 4.16kV system sourced from the 69kV supply system. No load will be left un-served for loss of a transformer or supply line resulting in a very reliable supply to the City of Newport and southern Middletown.

Plan provides capacity to supply load growth on Aquidneck Island well beyond the study horizon period at relatively low cost. Spare capacity will exist at Dexter, Jepson and Newport substations to supply future load growth.

Plan eliminates substation equipment in need of replacement or upgrades; eliminates the need to upgrade manhole and ductline infrastructure to reinforce the 23kV supply system; and eliminates the need for a second 69kV line into Newport.

3.5 Business and Customer Issues

The project follows up on action items proposed by the Company to the Rhode Island Public Utility Commission to identify and resolve electrical related issues in the area as a result of interruptions to the Newport electrical system resulting in significant customer outages that occurred in the summer of 2003. Failure to execute this project may impact commitment made by the Company to state regulators.

3.6 Alternatives

Alternative 1: [redacted] Line to Newport and substation additions ($82.85M)

[redacted]. A comprehensive routing analysis was completed for this supply line and this analysis concluded the line would have to be built underground on city streets.

[redacted]

Construct a [redacted] substation in Newport on a parcel of land recently acquired for this purpose. The station would consist of two (2) transformers supplying metal-clad switchgear with (8) 13.8kV feeder positions with five feeders being initially installed.

This alternative would retire North Aquidneck, South Aquidneck, Bailey Brook, and Vernon substations to relieve the highly loaded 23kV supply system and is part of a comprehensive solution to address asset condition, environmental, thermal, and reliability concerns at least cost. Upgrading the 23kV supply system is not an economical approach since most of the infrastructure consists of small paper and lead cable installed in 3-inch ductline. The small ductline is not suitable to house the

required larger solid dielectric cables. Upgrading this infrastructure is not recommended due to the significant cost impact.

The estimated cost of this plan is $82.85M, or $29.00M higher than the preferred plan. This plan has similar reliability benefits to the preferred plan. However, there is no economic or reliability benefit to implement this plan over the preferred plan.

Alternative 2: Non-Wires Alternative

The recommended plan is part of a comprehensive solution to address asset condition, safety, reliability, and environmental concerns on Aquidneck Island. The need for these investments is immediate. Due to the immediate need for these investment and because many concerns are related to asset condition and environmental issues, a non-wires solution is not applicable. New supply and distribution capacity is the only reasonable alternative to address the identified concerns.

3.7 Safety, Environmental and Project Planning Issues

A filing to the Rhode Island Energy Facility Siting Board ("EFSB") is required to build the proposed [redacted] substation in Middletown and to upgrade [redacted] lines (Line 61 and Line 62) [redacted] A team has been formed for this filing with a projected filing date of spring 2015.

An Environmental Report is required to support the application to the EFSB for construction of jurisdictional facilities. The Environmental Report must be prepared in accordance with the EFSB Rules to provide information on the potential environmental impacts of the electric transmission system improvements proposed by the applicant.

Voltage conversions are required to upgrade the distribution system from 4.16kV to 13.8kV in Newport and Middletown. Outages are required to energize the converted areas at 13.8kV. These conversions and outages may have to occur during off hours or winter months to avoid conflicts with the City of Newport's tourist season.

3.8 Execution Risk Appraisal

Number	Detailed Description of Risk / Opportunity	Probability	Impact		Score		Strategy	Risk Owner	Comments/Actions
			Cost	Schedule	Cost	Schedule			
1	Drawn out EFSB approval of Jepson substation relocation.	3	3	5	9	15	Mitigate	Project Manager/RDW	Meet with abutters during stakeholder outreach process to discuss mitigative measures.
2	Limited opportunities for outage for Line 63 Loop construction.	3	1	3	3	9	Mitigate	Project Manager	Outages will be planned one year in advance and an outage coordination consultant will be brought onto the project team. Schedule construction to finish during off peak period.
3	Construction delays due to poor weather or damage from major storms.	2	3	3	6	6	Accept	Project Manager	Create some slack within the schedule
4	Limited opportunities for outage for Newport Substation connection to Line 63.	3	1	3	3	9	Mitigate	Project Manager	Gate 2 has a breaker position that may be used to prevent the need for or an outage. Working with the engineering team to decide best options to elimimate the need for an outage.
5	Drawn out EFSB approval of Line 61/62 conversions.	3	1	5	3	15	Mitigate	Legal/RDW/PM	Public outreach consultant (RDW) has been brought onto the project team.
6	Limited opportunities for Line 61/62 outages for construction cutovers.	4	1	3	4	12	Mitigate	Project Manager/Construction Supervisor	Outages will be planned one year in advance and an outage coordination consultant will be brought onto the project team. Construction will be scheduled so that cutovers will be performed during off peak periods.
7	Limited opportunities for Jepson Substation construction cutovers.	3	1	3	3	9	Mitigate	Project Manager	Outages will be planned one year in advance and an outage coordination consultant will be brought onto the project team.
8	Limited opportunities for distribution system outages for cutovers during construction.	5	1	5	5	25	Mitigate	Project Manager	An outage coordination consultant will be brought onto the project team.
9	Change in ADA clearance requirement from 3' to 4' during design/construction.	2	2	2	4	4	Avoid	Project Manager/Legal	Obtain construction permits from DOT early prior to possible change in ADA regulations.
10	Construction delays due to other utilities not transfering their lines within the project schedule.	4	1	3	4	12	Avoid	Project Manager/Construction Supervisor	Coordinate construction plan with Verizon during constructability review process. Coordination during design has started and will be maintained through project.
11	General public opposition to the project.	3	2	4	6	12	Mitigate	RDW/PM/Outreach Group	Public outreach consultant (RDW) has been brought onto the project team. Project information (facts sheets/talking points) for all projects on Aquidneck Island to be developed.
12	Negative impacts to wetlands contained on Jepson substation parcel during construction/relocation.	2	2	2	4	4	Mitigate	VHB/Substation Engineering/Construction Supervisor	VHB has delineated all wetlands and will ID construction mitigation requirements. Design will account for minimizing wetlands impacts. Construction activities will need to follow SESC measures.
13	FAA may require certain mitigative measures for construction [redacted]	3	2	1	6	3	Accept	Distribution Design	Submit required documentation for each pole to be installed early in the design process.
14	Majority of the distribution and subtransmission work is on well traveled roadways.	5	3	1	15	5	Accept	Distribution Line Construction/Contractor	Develop traffic control and detour plans for the project and perform extensive coordination with the DOT and cities/towns.
15	Numerous poles appear to be encroaching on private property and easements/rights are believed to not have been obtained.	4	1	1	4	4	Accept	Real Estate/PM	Budget and time to be allocated to obtain proper rights/easements as required.
16	Approval to install 2 additional steel poles within the exsting easement [redacted] along Line 63 involves extensive coordination and teakes a significan amount of time to get the necessary approvals.	5	1	5	5	25	Accept	Real Estate/PM	Early coordination with the navy has begun and will continue so as to mitigate the issue prior to commencement of construction.
17	Approval [redacted] for Gate 2 substation work is required from base commander. Construction work at the substation is schedule to begin in mid 2015	5	1	5	5	25	Accept	Real Estate/PM	Early coordination [redacted] has begun in order to mitigate this issue.
18	Limited construction windows for work in Middletown and Newport.	4	2	5	8	20	Accept	Project Manager	Extensive coordination of all construction activities and schedule, traffica management plan, detour plans etc will be necessary in advance of amy construction work.

3.9 Permitting

Permit Name	Probability Required (Certain/ Likely/ Unlikely)	Duration To Acquire Permit	Status (Complete/ In Progress Not Applied For)	Estimated Completion Date
RIDEM Filing	Likely	Unknown	Not Applied For	TBD
Newport - Special Use Permit	Certain	Unknown	Not Applied For	TBD
EFSB Filing – Jepson substation	Certain	Unknown	Not Applied For	TBD
Road Opening Permit	Certain	Unknown	Not Applied For	TBD
Building Permit	Certain	Unknown	Not Applied For	TBD

3.10 Investment Recovery

3.10.1 Investment Recovery and Regulatory Implications

N.A.

3.10.2 Customer Impact

This project results in an indicative first full year revenue requirement when the asset is placed in service equal to approximately $9.247M. This is indicative only. The actual revenue requirement will differ, depending upon the timing of the next rate case and/or the timing of the next filing in which the project is included in rate base.

3.10.3 CIAC / Reimbursement

N.A.

3.11 Financial Impact to National Grid

3.11.1 Cost Summary Table

US Sanction Paper

nationalgrid

Project Number	Project Title	Project Estimate Level (%)	Spend ($M)	Prior Yrs	Current Planning Horizon Yr. 1 2014/15	Yr. 2 2015/16	Yr. 3 2016/17	Yr. 4 2017/18	Yr. 5 2018/19	Yr. 6 + 2019/20	Total
C015158	Newport Substation (D-Sub)	+/- 25%	CapEx	0.307	0.100	0.100	0.500	2.500	2.100	0.893	6.500
			OpEx	0.000	0.000	0.000	0.000	0.000	0.000	0.000	0.000
			Removal	0.004	0.010	0.100	0.700	0.641	0.000	0.000	1.455
			Total	0.311	0.110	0.200	1.200	3.141	2.100	0.893	7.955
C028628	Newport Substation (D-Line)	+/- 25%	CapEx	0.115	0.240	1.500	2.500	2.500	4.000	2.045	12.900
			OpEx	0.000	0.020	0.160	0.270	0.270	0.420	0.210	1.350
			Removal	0.000	0.030	0.200	0.350	0.350	0.540	0.280	1.750
			Total	0.115	0.290	1.860	3.120	3.120	4.960	2.535	16.000
CD00656	Jepson Substation (D-Sub)	+/- 25%	CapEx	0.003	0.100	0.100	1.700	5.500	5.500	3.997	16.900
			OpEx	0.000	0.000	0.000	0.000	0.000	0.000	0.000	0.000
			Removal	0.000	0.000	0.000	0.050	0.050	0.150	0.250	0.500
			Total	0.003	0.100	0.100	1.750	5.550	5.650	4.247	17.400
C054054	Jepson Substation (D-Line)	+/- 25%	CapEx	0.000	0.000	0.050	0.100	2.500	2.500	1.350	6.500
			OpEx	0.000	0.000	0.000	0.000	0.040	0.040	0.020	0.100
			Removal	0.000	0.000	0.000	0.000	0.040	0.040	0.020	0.100
			Total	0.000	0.000	0.050	0.100	2.580	2.580	1.390	6.700
C024159	Newport [redacted] line 63 (D-Line)	+/- 25%	CapEx	0.093	0.050	0.020	0.020	0.290	0.287	0.040	0.800
			OpEx	0.010	0.000	0.000	0.000	0.000	0.000	0.000	0.010
			Removal	0.000	0.000	0.000	0.000	0.010	0.040	0.040	0.090
			Total	0.103	0.050	0.020	0.020	0.300	0.327	0.080	0.900
CD00649	Gate 2 Substation (D-Sub)	+/- 25%	CapEx	0.005	0.130	0.600	0.100	0.300	0.300	0.100	1.535
			OpEx	0.000	0.000	0.010	0.020	0.070	0.070	0.020	0.190
			Removal	0.000	0.000	0.015	0.030	0.100	0.100	0.030	0.275
			Total	0.005	0.130	0.625	0.150	0.470	0.470	0.150	2.000
CD00651	Bailey Brook Retirement (D-Sub)	+/- 25%	CapEx	0.000	0.000	0.000	0.000	0.000	0.000	0.000	0.000
			OpEx	0.000	0.000	0.000	0.000	0.000	0.000	0.000	0.000
			Removal	0.000	0.000	0.010	0.020	0.020	0.150	0.230	0.430
			Total	0.000	0.000	0.010	0.020	0.020	0.150	0.230	0.430
CD00652	Vernon Retirement (D-Sub)	+/- 25%	CapEx	0.000	0.000	0.000	0.000	0.000	0.000	0.000	0.000
			OpEx	0.000	0.000	0.000	0.000	0.000	0.000	0.000	0.000
			Removal	0.000	0.000	0.010	0.020	0.020	0.100	0.150	0.300
			Total	0.000	0.000	0.010	0.020	0.020	0.100	0.150	0.300
C058401	Merton Sub Improvements (D-Sub)	+/- 25%	CapEx	0.000	0.000	0.010	0.020	0.020	0.150	0.100	0.300
			OpEx	0.000	0.000	0.000	0.000	0.010	0.025	0.015	0.050
			Removal	0.000	0.000	0.000	0.000	0.000	0.000	0.000	0.000
			Total	0.000	0.000	0.010	0.020	0.030	0.175	0.115	0.350
C058310	Harrison Sub Improvements (D-Sub)	+/- 25%	CapEx	0.000	0.000	0.010	0.020	0.020	0.150	0.100	0.300
			OpEx	0.000	0.000	0.000	0.000	0.010	0.025	0.015	0.050
			Removal	0.000	0.000	0.000	0.000	0.000	0.000	0.000	0.000
			Total	0.000	0.000	0.010	0.020	0.030	0.175	0.115	0.350
C058404	Kingston Sub Improvements (D-Sub)	+/- 25%	CapEx	0.000	0.000	0.020	0.030	0.100	0.200	0.150	0.500
			OpEx	0.000	0.000	0.000	0.000	0.000	0.000	0.000	0.000
			Removal	0.000	0.000	0.000	0.000	0.010	0.050	0.040	0.100
			Total	0.000	0.000	0.020	0.030	0.110	0.250	0.190	0.600
C054052	No. Aquidneck Retirement (D-Sub)	+/- 25%	CapEx	0.000	0.000	0.000	0.000	0.000	0.000	0.000	0.000
			OpEx	0.000	0.000	0.000	0.000	0.000	0.000	0.000	0.000
			Removal	0.000	0.000	0.010	0.010	0.010	0.100	0.170	0.300
			Total	0.000	0.000	0.010	0.010	0.010	0.100	0.170	0.300
C058407	So. Aquidneck Retirement (D-Sub)	+/- 25%	CapEx	0.000	0.000	0.000	0.000	0.000	0.000	0.000	0.000
			OpEx	0.000	0.000	0.000	0.000	0.000	0.000	0.000	0.000
			Removal	0.000	0.000	0.010	0.010	0.010	0.100	0.170	0.300
			Total	0.000	0.000	0.010	0.010	0.010	0.100	0.170	0.300
Total Project Sanction			CapEx	0.523	0.620	2.410	4.990	13.730	15.187	8.775	46.235
			OpEx	0.010	0.020	0.170	0.290	0.400	0.580	0.280	1.750
			Removal	0.004	0.040	0.355	1.190	1.261	1.370	1.380	5.600
			Total	0.537	0.680	2.935	6.470	15.391	17.137	10.435	53.585

3.11.2 Project Budget Summary Table

Project Costs Per Business Plan

$M	Prior Yrs (Actual)	Current Planning Horizon Yr. 1 2014/15	Yr. 2 2015/16	Yr. 3 2016/17	Yr. 4 2017/18	Yr. 5 2018/19	Yr. 6 + 2019/20	Total
CapEx	0.523	2.140	3.325	5.028	4.003	0.000	0.000	15.019
OpEx	0.010	0.895	0.157	0.291	0.205	0.000	0.000	1.558
Removal	0.004	0.079	0.188	0.481	0.285	0.000	0.000	1.037
Total Cost in Bus. Plan	0.537	3.114	3.670	5.800	4.493	0.000	0.000	17.614

Variance (Business Plan-Project Estimate)

$M	Prior Yrs (Actual)	Current Planning Horizon Yr. 1 2014/15	Yr. 2 2015/16	Yr. 3 2016/17	Yr. 4 2017/18	Yr. 5 2018/19	Yr. 6 + 2019/20	Total
CapEx	0.000	1.520	0.915	0.038	(9.727)	(15.187)	(8.775)	(31.216)
OpEx	0.000	0.875	(0.013)	0.001	(0.195)	(0.580)	(0.280)	(0.192)
Removal	0.000	0.039	(0.167)	(0.709)	(0.976)	(1.370)	(1.380)	(4.564)
Total Cost in Bus. Plan	0.000	2.434	0.735	(0.670)	(10.898)	(17.137)	(10.435)	(35.972)

3.11.3 Cost Assumptions

Substation estimates were obtained from Conceptual Engineering Reports prepared by substation engineering. Conceptual Grade Estimates have been developed with only the conceptual understanding of the project. The estimates have been prepared using historical cost data or data from similar projects with an accuracy of -25% to +50%.

The estimate for [redacted] line was obtained from Routing Analysis Report prepared by transmission line engineering and consultants to the company. This Conceptual Engineering Estimate has been developed with only the conceptual understanding of the project. The estimates have been prepared using historical cost data or data from similar projects with an accuracy of -25% to +50%.

The distribution line work estimate was developed utilizing generic construction costs. Minimal field work has been performed to assess the actual condition of the assets or the number of poles and transformers needing replacement associated with the conversion from 4kV to 13kV. This is an Investment Grade Estimate with a level of accuracy ranging from -50% to +200%.

3.11.4 Net Present Value / Cost Benefit Analysis

Not financially driven

3.11.4.1 NPV Summary Table

N.A.

3.11.4.2 NPV Assumptions and Calculations

N.A.

3.11.5 Additional Impacts

None

3.12 Statements of Support

3.12.1 Supporters

The supporters listed have aligned their part of the business to support the project.

Role	Individual	Responsibilities
Investment Planning	Glen DiConza	Endorses relative to distribution 5-year business plan or emergent work
Resource Planning	Mike Mokey	Endorses D-Line resources, cost estimate, schedule and portfolio alignment
Resource Planning	Mark Phillips	Endorses substation resources, cost estimate, schedule and portfolio alignment
Asset Management/ Planning	Kasia Kulbacka	Endorses scope, estimate, and schedule with the company's goals, strategies, and objectives
Asset Management/ Planning	Alan Labarre	Endorses scope, estimate, and schedule with the company's goals, strategies, and objectives
Engineering / Design	Suzan Martuscello	Endorses substation scope, design, conformance with design standards
Engineering / Design	Mark Browne	Endorses sub-transmission line scope, design, conformance with design standards
Engineering / Design	Len Swanson	Endorses substation scope, design, conformance with design standards
Project Management	Sonny Anan	Endorses Resources, cost estimate, schedule
Project Management	Timothy Moore	Endorses Resources, cost estimate, schedule

3.12.2 Reviewers

The reviewers have provided feedback on the content/language of the paper.

Function	Individual
Finance	Keith Fowler / Phillip Horowitz
Regulatory	Peter Zschokke
Jurisdictional Delegates	Jim Patterson
Procurement	Art Curran
Control Center	Michael Gallagher
Control Center	Will Houston

REDACTED

4 Appendices

4.1 Sanction Request Breakdown by Project

$M	C015158	C028628	CD00658	C054054	C024159	CD00649	CD00651	CD00652	C058401	C058310	C058404	C054052	C058407	Total
CapEx	1.000	3.500	2.100	0.800	0.200	1.100			0.050	0.050	0.600			9.400
OpEx		0.200												0.200
Removal		0.200					0.050	0.050				0.050	0.050	0.400
Total	1.000	3.900	2.100	0.800	0.200	1.100	0.050	0.050	0.050	0.050	0.600	0.050	0.050	10.000

4.2 Other Appendices

N.A.

4.3 NPV Summary

N.A.

4.4 Customer Outreach Plan

A Customer Outreach Plan is required and will be developed as part of the Energy Facilities Siting Board (EFSB) Filing. The company has hired a consultant to develop a comprehensive public outreach plan for all of proposed projects on Aquidneck Island.

This outreach effort will be part of a comprehensive and proactive public outreach process to establish and maintain communications with stakeholders (e.g., project abutters, residents, businesses, federal, state and local officials, and community groups).

This process will include opportunities for public education and communication regarding the need for the Project, the permitting and siting processes, the detailed construction plans, the dissemination of construction updates and outreach prior to and during construction, and follow-up outreach after Project completion. The process will be designed to engage the community in a two-way dialogue, facilitate transparency throughout the Project, foster public participation, and solicit feedback from stakeholders.

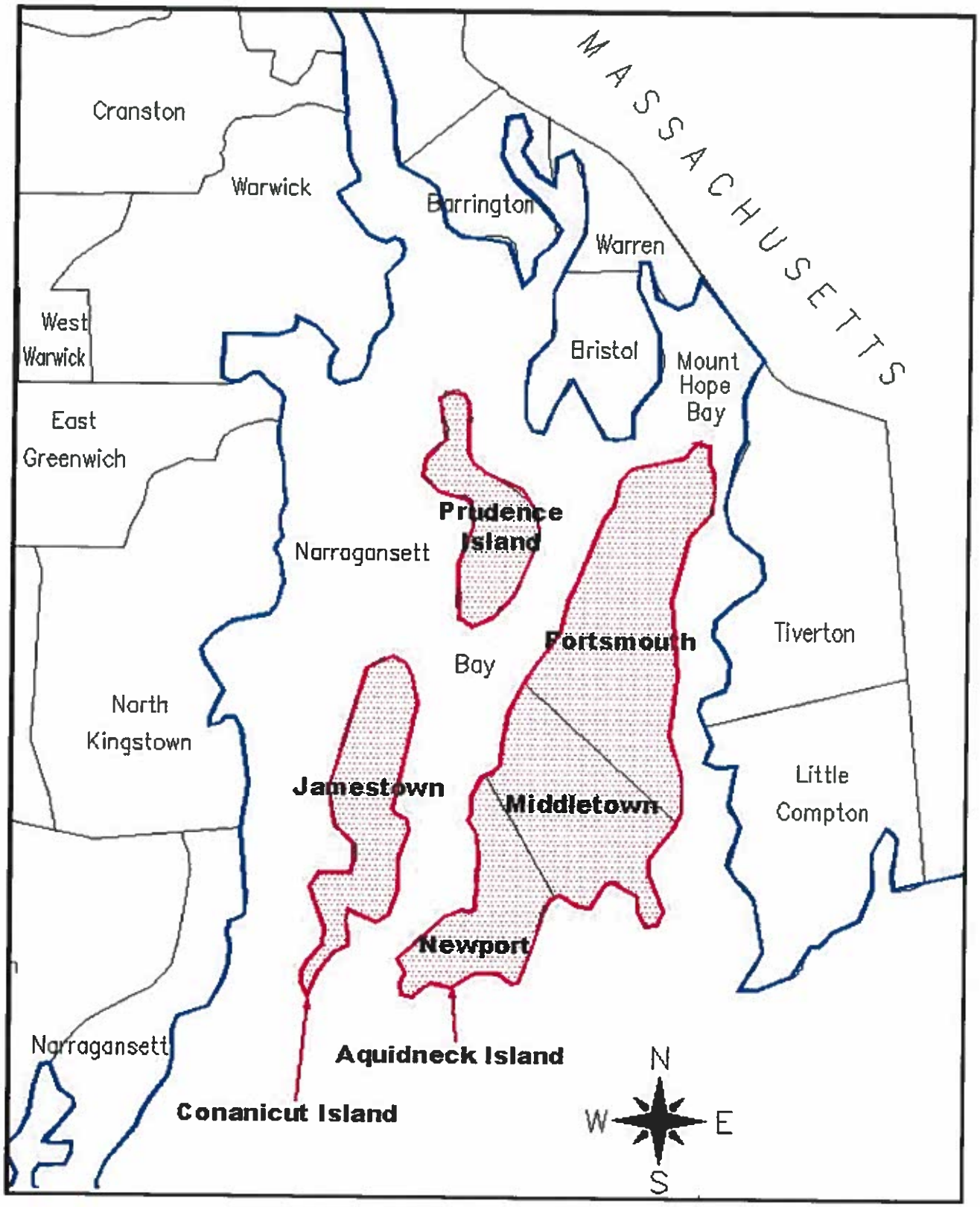

FIGURE 1 – GEOGRAPHIC AREA MAP

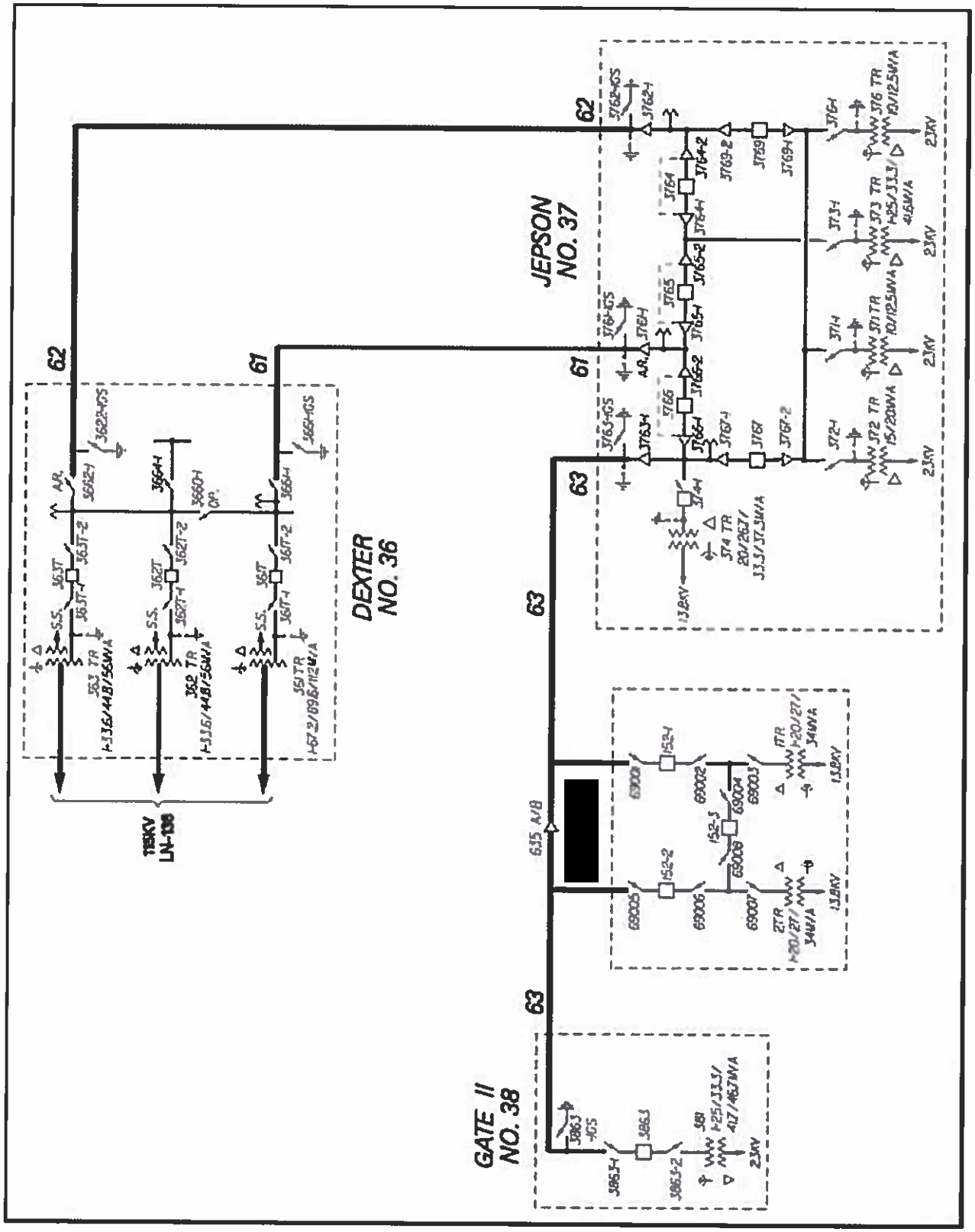

FIGURE 2 – EXISTING TRANSMISSION SYSTEM ONE-LINE DIAGRAM

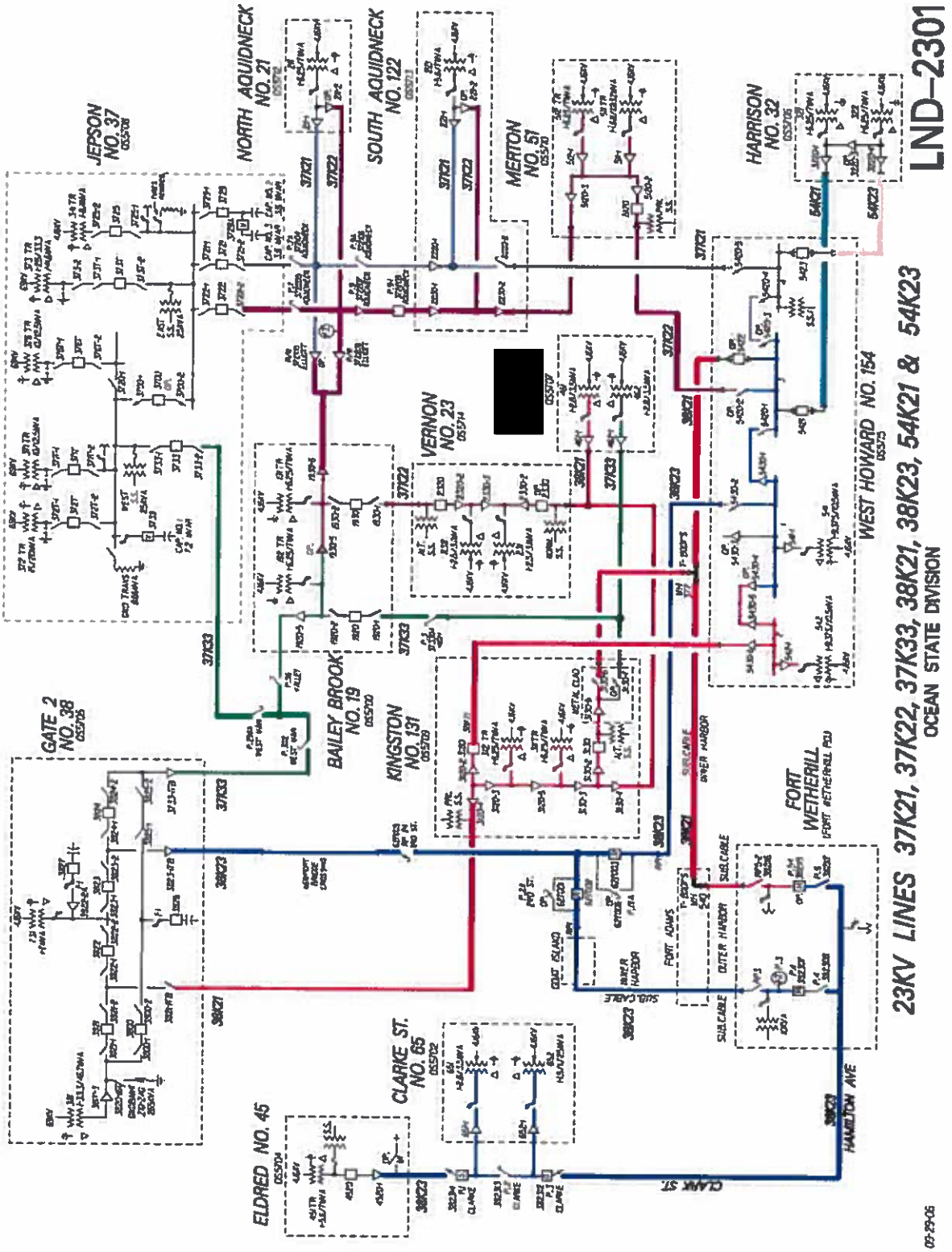

FIGURE 3 – EXISTING SUB-TRANSMISSION SYSTEM ONE-LINE DIAGRAM

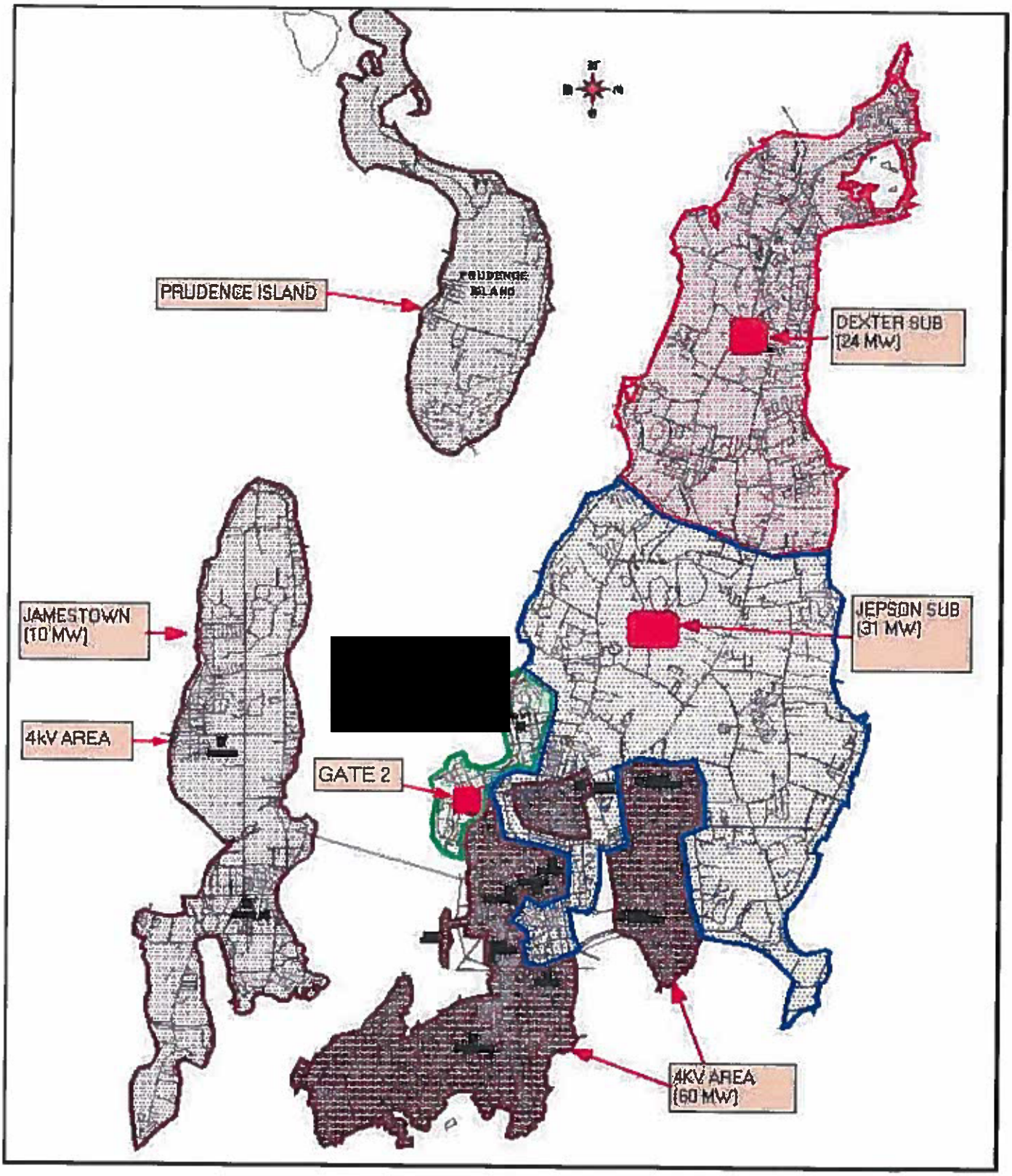

FIGURE 4 – GEOGRAPHIC MAP OF EXISTING DISTRIBUTION

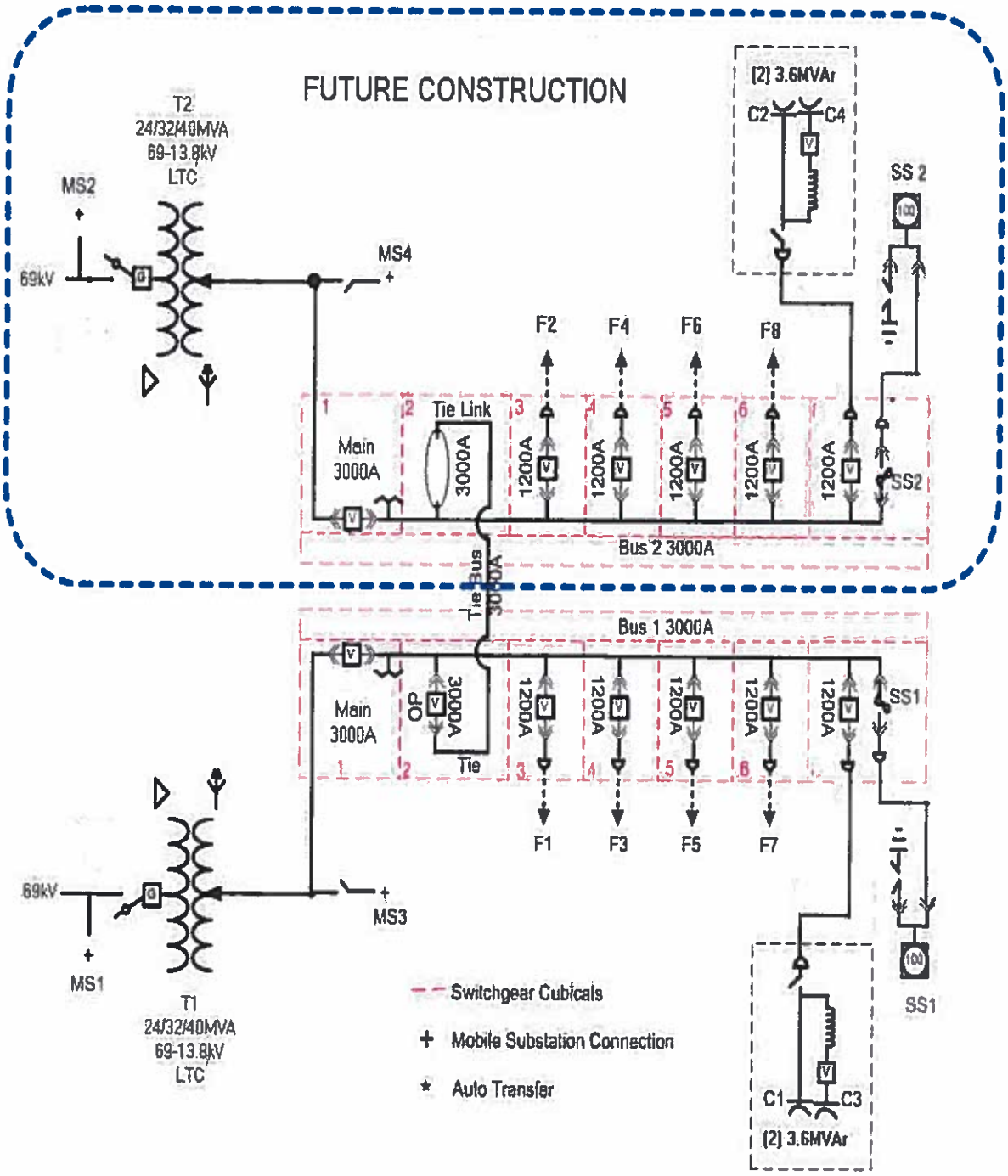

FIGURE 5 – NEWPORT 69/13.8kV SUBSTATION PROPOSED ONE-LINE

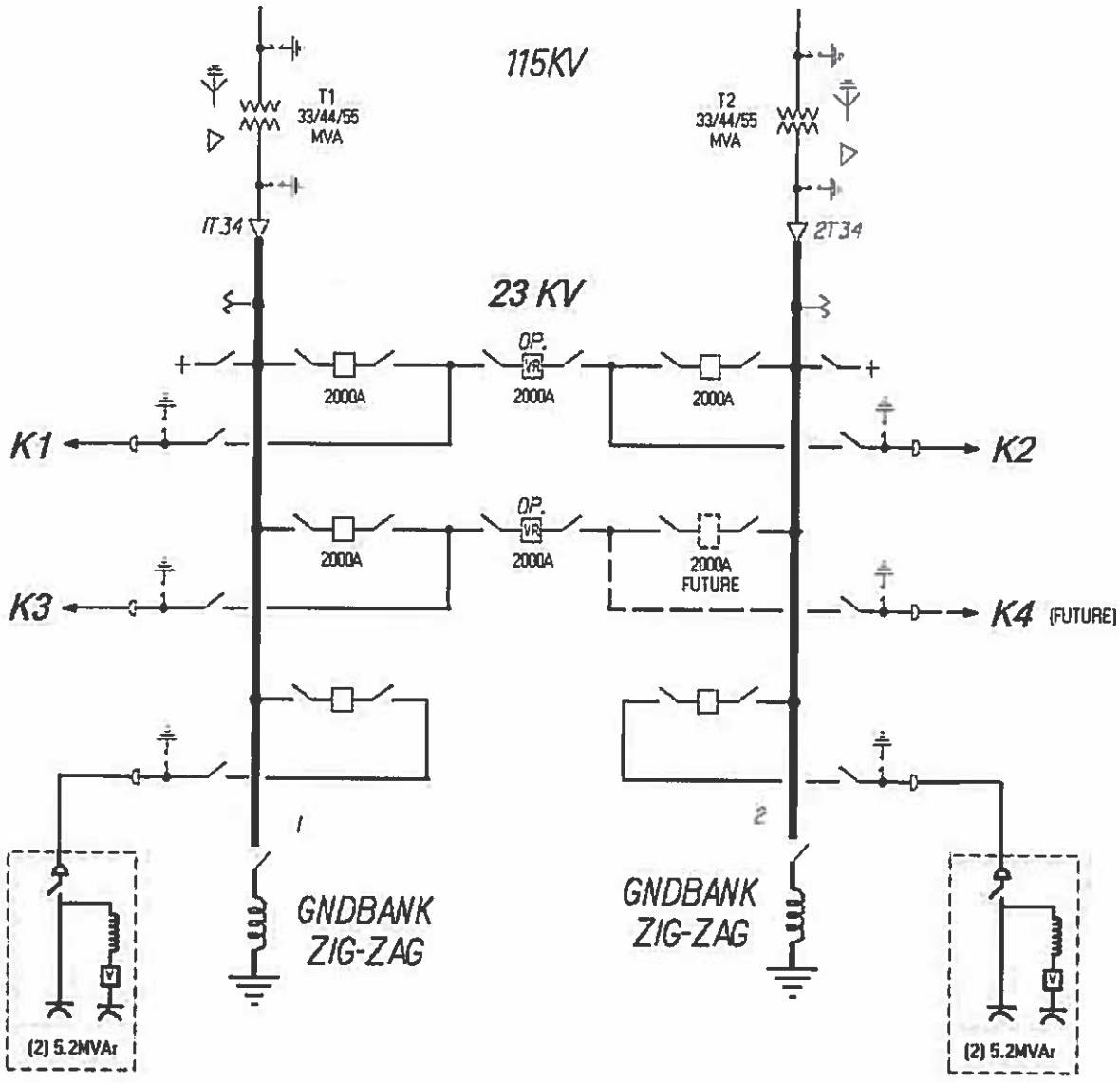

FIGURE 6 – MIDDLETOWN 115/23kV SUBSTATION PROPOSED ONE-LINE

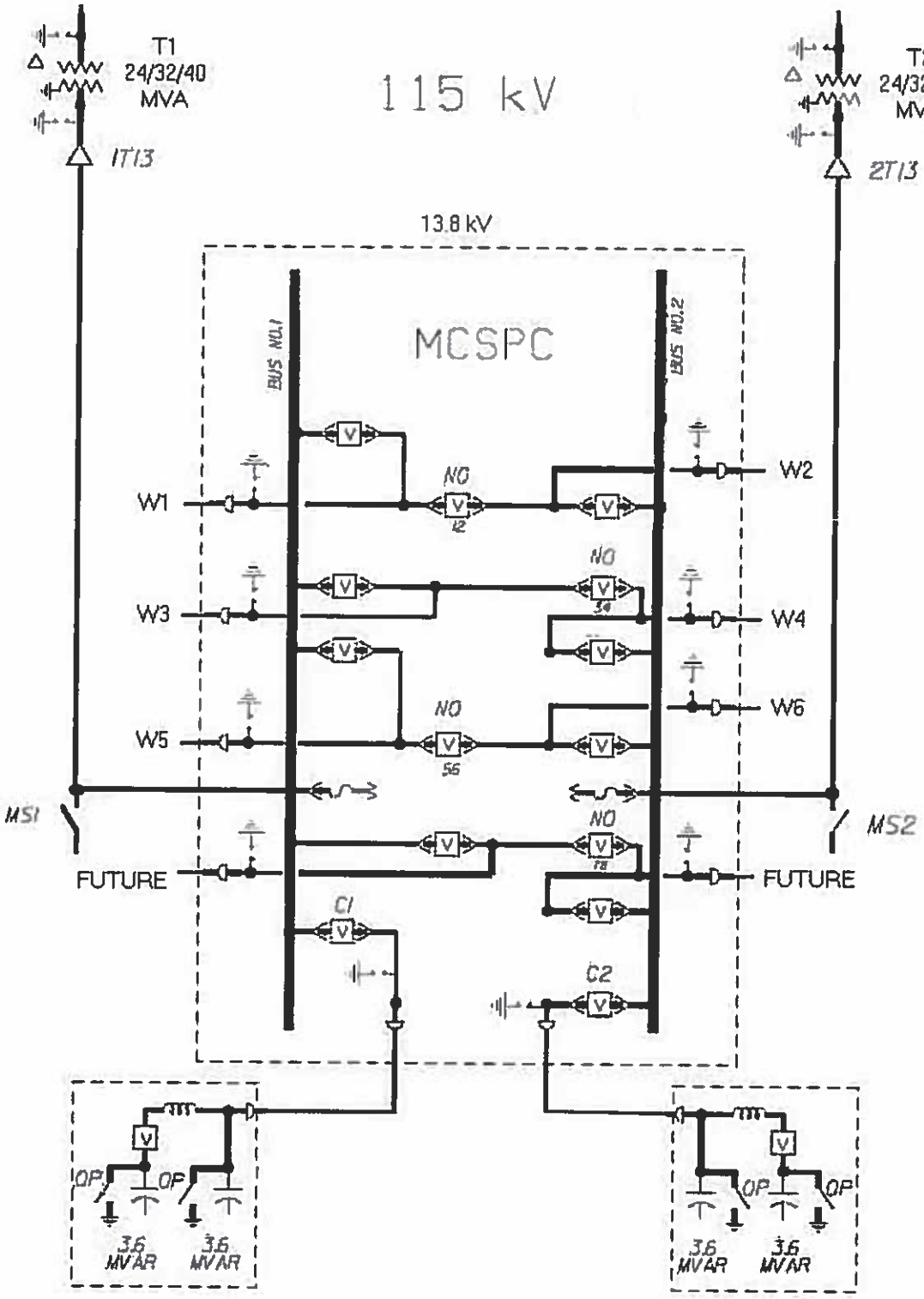

FIG 7 – MIDDLETOWN 115/13.8kV SUBSTATION PROPOSED ONE-LINE

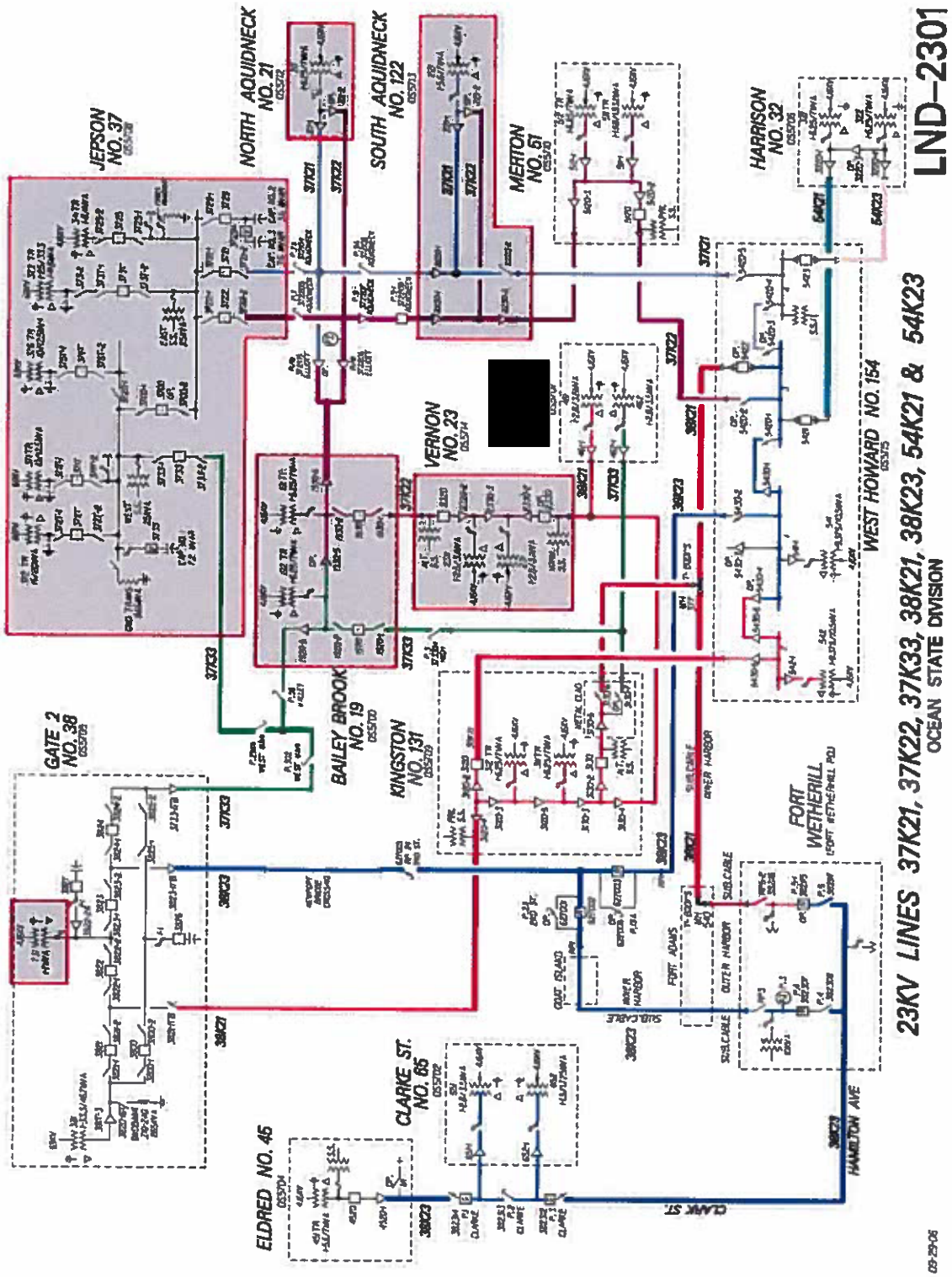

FIGURE 8 – PROPOSED STATION RETIREMENTS

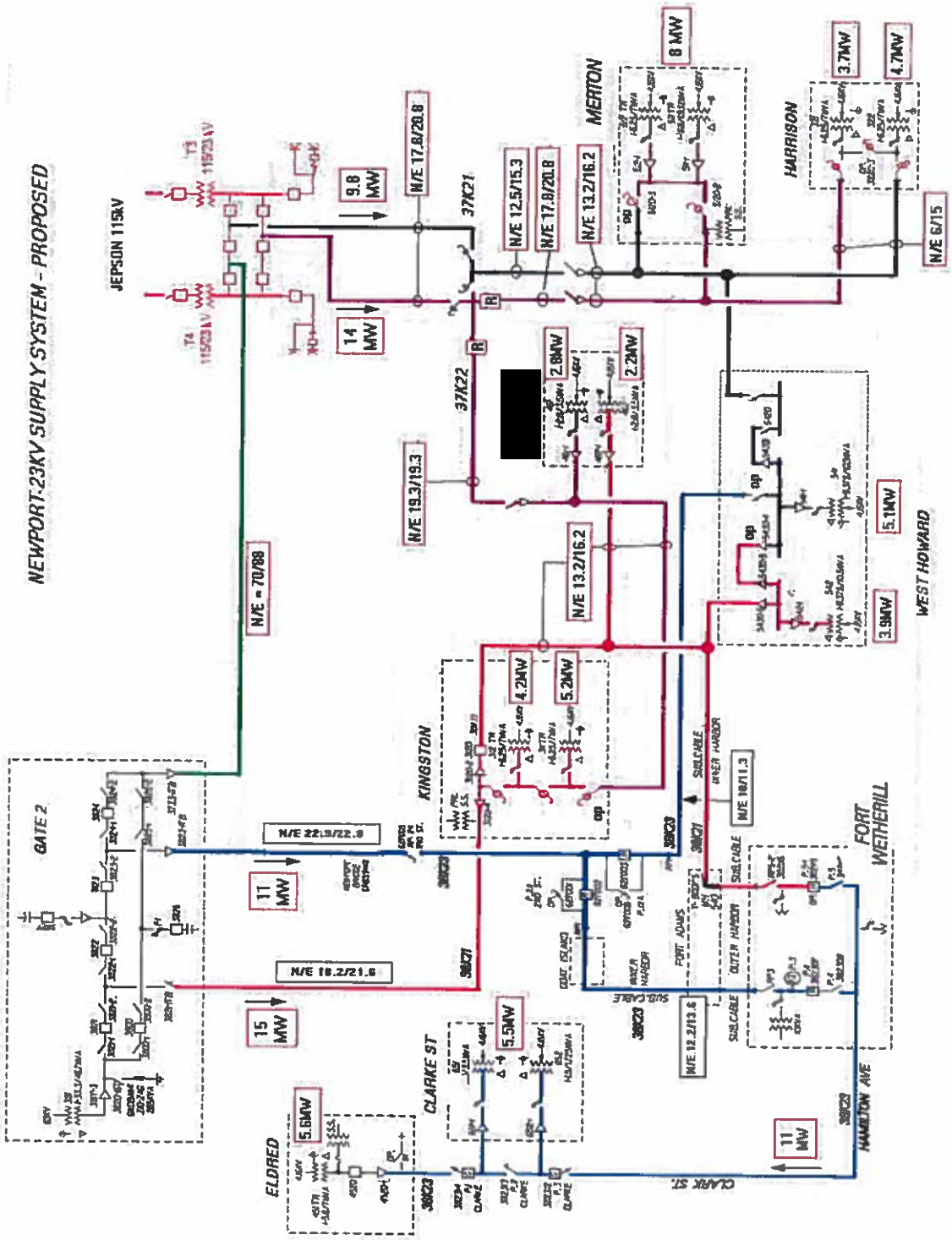

FIG 9 – PROPOSED SUBTRANSMISSION SYSTEM ONE-LINE

This document has been redacted for Critical Energy Infrastructure Information (CEII). 5/20/2015

Title:	New Southeast Substation	**Sanction Paper #:**	USSC-15-109
Project #:	See Section 1.3	**Sanction Type:**	Partial Sanction
Operating Company:	The Narragansett Electric Co.	**Date of Request:**	05/13/2015
Author:	Jack P. Vaz	**Sponsor:**	John Gavin, VP Electric Asset Management
Utility Service:	Electricity T&D	**Project Manager:**	George Maximovich

1 Executive Summary

1.1 Sanctioning Summary

This paper requests partial sanction in the amount $5.600M with a tolerance of +/- 10% for the purposes of performing all engineering activities, permitting, procurement of long lead materials, and to initiate construction activities.

This sanction amount is $5.600M broken down into:

$5.100M Capex
$0.000M Opex
$0.500M Removal

NOTE the potential investment of $23.000M with a tolerance of +50%/-25%, contingent upon submittal and approval of a Project Sanction paper following completion of final engineering and design.

1.2 Project Summary

Pawtucket No. 1 substation supplies load in the City of Pawtucket, Rhode Island. It consists of an indoor substation and an outdoor substation. It supplies approximately 36,000 customers with a peak electrical demand of 114MW. There are a number of concerns in this area:

- The indoor substation was designed based on the standards at the time it was built. Operating and working in this station now requires special procedures and added safeguards to be followed. It is challenging to find replacement parts for the equipment in the station since parts have to be custom made or salvaged from facilities that have been removed from service.

- The circuit breakers in the indoor substation are from 40 to 94 years old, obsolete, and are no longer supported by any vendor. These breakers have an elevated potential for failure due to their condition and type.

- The building has structural issues that cause concern for the continued safe and reliable operation of the substation. If this building was to remain, it is anticipated that an investment of several million dollars would be required to maintain the building in a safe condition.

- There is un-served load for loss of either the 73 transformer or the 74 transformer that exceeds the distribution planning criteria.

- The loading on a number of feeders is projected to exceed summer normal ratings along with the loading on bus section 73.

To address these concerns, the recommended plan is to:

- Construct a new eight feeder [redacted] metal clad station with two transformers and breaker and a half design on a site adjacent to the transmission right of way on York Avenue in the City of Pawtucket. [redacted] The 13.8kV distribution system will be rearranged so that the new station supplies most of the load east of the Seekonk River.

- Construct a new control house at the Pawtucket No 1 substation site to house the control equipment for the [redacted] station presently located in the indoor substation building. The switchgear in the indoor building and all the previously abandoned equipment will be removed. After all electrical equipment has been removed the indoor substation building will be demolished.

At Pawtucket No 1, there is limited EMS capability. It is recommended to expand EMS on the remaining outdoor station to provide remote status, control and monitoring of all switching devices, transformers, voltage regulation and battery systems. Alarming will include transformer low oil; transformer, circuit breaker, relay and battery system trouble. Monitoring will include voltage and current for all three phases and neutral, MW, MVAR, and MVA. Control will include trip and close on all switching devices; reclose on/off on circuit breakers; ground relay control on feeders for switching, and control of voltage regulation.

1.3 Summary of Projects

Project Number	Project Type	Project Title	Estimate Amount ($M)
C053657	D-Sub	Southeast Sub (D-Sub)	$9.000
C053658	D-Line	Southeast Sub (D-Line)	$6.100
C055563	T-Line	Southeast Sub (T-Line)	$1.000
C056343	T-Sub	Southeast Sub (T-Sub)	$0.600
C055583	T-Sub	Pawtucket No 1 (T-Sub)	$2.500
C055683	D-Sub	Pawtucket No 1 (D-Sub)	$3.500
C061766	T-Sub	Valley Sub P11 Upgrades	$0.300
		Total	**$23.000**

1.4 Associated Projects

Project Number	Project Type	Project Title	Estimate Amount ($M)
C053249	T-Sub	Robinson Ave Control House Upgrades	$1.203

1.5 Prior Sanctioning History

Not Applicable

1.6 Next Planned Sanction Review

Date (Month/Year)	Purpose of Sanction Review
Jan - 2018	Project Sanction

1.7 Category

Category	Reference to Mandate, Policy, or NPV Assumptions
○ Mandatory ◉ Policy- Driven ○ Justified NPV	The investment is policy driven. Without this project the company will not be able to provide a reliable electric service to the customers in this area. This investment also addresses safety and asset condition concerns with Pawtucket No. 1 indoor substation.

1.8 Asset Management Risk Score

Asset Management Risk Score: **44**

Primary Risk Score Driver: (Policy Driven Projects Only)

◉ Reliability ○ Environment ○ Health & Safety ○ Not Policy Driven

1.9 Complexity Level

◉ High Complexity ○ Medium Complexity ○ Low Complexity ○ N/A

Complexity Score: **25**

1.10 Process Hazard Assessment

A Process Hazard Assessment (PHA) is required for this project:

◉ Yes ○ No

1.11 Business Plan

Business Plan Name & Period	Project included in approved Business Plan?	Over / Under Business Plan	Project Cost relative to approved Business Plan ($)
FY16-FY20 NE Distribution Budget	◉ Yes ○ No	○ Over ◉ Under ○ NA	$0.524M
FY16-FY20 NE Transmission Budget	◉ Yes ○ No	◉ Over ○ Under ○ NA	$0.770M

NOTE: This project was included in National Grid's FY 2016 Electric Infrastructure, Safety, and Reliability Plan (The RI ISR).

1.12 If cost > approved Business Plan how will this be funded?

Re-allocation of funds within the portfolio will be managed by Resource Planning to meet jurisdictional budgetary, statutory and regulatory requirements.

1.13 Current Planning Horizon

Distribution Project:

Spend	Current Planning Horizon ($M)						
	FY16	FY17	FY18	FY19	FY20	FY21	Total
	2015/16	2016/17	2017/18	2018/19	2019/20	2020/21	
CapEx	-	0.400	3.650	6.350	3.400	-	13.800
OpEx	-	-	0.050	0.100	0.050	-	0.200
Removal	-	0.025	0.275	1.500	2.800	-	4.600
Total	-	0.425	3.975	7.950	6.250	-	18.600

Transmission Project:

Spend	Current Planning Horizon ($M)						
	FY16	FY17	FY18	FY19	FY20	FY21	Total
	2015/16	2016/17	2017/18	2018/19	2019/20	2020/21	
CapEx	-	0.300	1.230	1.650	1.120	-	4.300
OpEx	-	-	-	0.050	0.050	-	0.100
Removal	-	-	-	-	-	-	-
Total	-	0.300	1.230	1.700	1.170	-	4.400

1.14 Key Milestones

Milestone	Target Date: (Month/Year)
Initial Partial Sanction	May - 2015
Start Preliminary Engineering (kick-off meeting)	Apr – 2016
Preliminary Engineering Complete	Apr - 2017
Engineering Design Complete – EDC	Dec – 2017
Project Sanction	Jan – 2018
Construction Start	May – 2018
Construction Complete – CC	May – 2019
Ready for Load - RFL	May – 2019
Demolish Pawtucket No 1 station Building	Jun - 2019
Project Closure Report	Mar – 2020

1.15 Resources, Operations and Procurement

Resource Sourcing			
Engineering & Design Resources to be provided	☑ Internal	☑ Contractor	
Construction/Implementation Resources to be provided	☑ Internal	☑ Contractor	
Resource Delivery			
Availability of internal resources to deliver project:	○ Red	○ Amber	◉ Green
Availability of external resources to deliver project:	○ Red	○ Amber	◉ Green
Operational Impact			
Outage impact on network system:	○ Red	○ Amber	◉ Green
Procurement Impact			
Procurement impact on network system:	○ Red	○ Amber	◉ Green

1.16 Key Issues (include mitigation of Red or Amber Resources)

1	Permitting will be required for the proposed Southeast Substation
2	Environmental cleanup may be required at Pawtucket No 1 substation.
3	

1.17 Climate Change

Contribution to National Grid's 2050 80% emissions reduction target:	◉ Neutral	○ Positive	○ Negative
Impact on adaptability of network for future climate change:	◉ Neutral	○ Positive	○ Negative

1.18 List References

1	Pawtucket Area Study – December 2014
2	Distribution Line Conceptual Engineering Report – May 2014
3	Substation Estimating Documents – May 2014

2 Decisions

The US Sanctioning Committee (USSC) at a meeting held on May 13, 2013:

(a) APPROVED the investment of $5.60M and a tolerance of +/- 10 % for the purposes of performing all engineering activities, permitting, procurement of long lead materials, and to initiate construction activities.

(b) NOTED the potential investment $23.000M to and a tolerance of +50%/- 25 %, contingent upon submittal and approval of a Project Sanction paper following completion of final engineering and design.

(c) NOTED that George Maximovich has the approved financial delegation to undertake the activities stated in (a).

Signature.....Date 5/14/15

Margaret Smyth
US Chief Financial Officer
Chairman, US Sanctioning Committee

REDACTED

3 *Sanction Paper Detail*

Title:	New Southeast Substation	**Sanction Paper #:**	USSC-15-109
Project #:	See Section 1.3	**Sanction Type:**	Partial Sanction
Operating Company:	The Narragansett Electric Co.	**Date of Request:**	05/13/15
Author:	Jack P. Vaz	**Sponsor:**	John Gavin, VP Electric Asset Management
Utility Service:	Electricity T&D	**Project Manager:**	George Maximovich

3.1 Background

Pawtucket No. 1 station is located on Tidewater Street on the west bank of the Seekonk River in the City of Pawtucket. It consists of a four story brick building constructed in 1907 and an outdoor switchyard. It has nineteen 13.8 kV distribution circuits that supply approximately 36,000 customers with a peak electrical demand of 114MW. Three feeders supply a network in downtown Pawtucket with approximately 3MW of load.

The brick building was part of a former power plant that was decommissioned in 1975 and is less than 25% utilized. This building houses indoor distribution switchgear and other electrical equipment. The electrical equipment still in service within the building is associated with both the indoor switchgear and the outdoor yard. Some electrical equipment associated with the former power plant has been abandoned in place.

The indoor substation was designed based on the standards at the time it was built. Operating and working in this station now requires special procedures and added safeguards to be followed. Additionally, it is challenging to find replacement parts for the equipment in the station since parts have to be custom made or salvaged from facilities that have been removed from service. The building layout is such that it precludes the implementation of modern installation standards in order to replace original equipment.

The breakers in the indoor substation consist of General Electric "H"-type circuit breakers ranging in age from 40 to 94 years old. The 1920 breakers are live-tank, oil-filled circuit breakers which are obsolete due to a lack of spare parts, slow operation, and the potential for failure. The 1970 breakers have a history of poor reliability especially during switching operations with three documented failures of the breaker motor and two documented failures of the trip/close coils.

A structural evaluation of the brick building has not been carried out in detail; however a number of structural issues cause concern for the continued safe and reliable operation of the substation. If this building was to remain, it is anticipated that an investment of several million dollars would be required to maintain the building in a safe condition.

A contingency at Pawtucket No.1 involving loss of a transformer or main bus would require significant load to be transferred to adjacent stations utilizing feeder ties. Pawtucket No. 1 only has weak ties to Valley St. station, therefore a significant amount of Pawtucket No. 1 load cannot be picked up during these contingencies. The projected bus loading and projected un-served load at Pawtucket No 1 for each bus section is shown in the table below:

Substation	Tranf. ID.	Rating (MVA)		2014 Peak Load		2014 Projected Un-Served Load Under Contingency	
		SN	SE	MW	% SN	MW	MWh Exposure
Pawtucket No.1	T71	47.8	47.8	23.4	49%	4.1	127
Pawtucket No.1	T73	47.8	47.8	57.3	120%	**23.1**	**645**
Pawtucket No.1	T74	47.8	47.8	33.3	70%	**14.1**	**356**

National Grid's Distribution Planning Criteria recommends mitigating any un-served load exposure in excess of 10 MW or 240 MWh. The loss of the T73 transformer, the T74 transformer, or a bus section at Pawtucket No. 1 would result in outage exposures in excess of those recommended by distribution planning criteria.

3.2 Drivers

This project is required to address safety, asset condition, and reliability concerns with the Pawtucket No.1 indoor substation. This project also addresses load at risk that exceeds the distribution planning criteria; feeder loading that exceeds summer normal ratings; and loading that exceeds the rated capacity of the station bus.

3.3 Project Description

Construct a [redacted] metal clad substation, breaker and a half design, adjacent to the transmission right of way on York Avenue. Southeast substation is presently located on this site but is in the process of being retired. The new station will have an ultimate layout for eight distribution circuits. [redacted] A one line of the proposed station is shown on Figure 4 and the site plan is shown on Figure 5.

After completion of the new station, approximately 55 MVA of load will be transferred from Pawtucket No. 1 to the new station and the remaining Pawtucket No. 1 load will be rearranged and supplied from switchgear sections 73 and 74. Indoor switchgear section 71 will be removed. The new station will supply the bulk of the load east of the Seekonk River while Pawtucket No. 1 will supply most of the load west of the Seekonk River.

A new control house will be built at Pawtucket No. 1 to house the control equipment for the [redacted] station that is presently housed in the indoor substation building. After all electrical equipment has been removed from the brick building, it will be demolished. A one line of the proposed Pawtucket No 1 retirements is shown of Figure 3.

At the remaining Pawtucket No 1 station, EMS functionality will be expanded to provide remote status, control and monitoring of all switching devices, transformers, voltage regulation and battery systems. Alarming will include transformer low oil; transformer, circuit breaker, relay and battery system trouble. Monitoring will include voltage and current for all three phases and neutral, MW, MVAR, and MVA. Control will include trip and close on all switching devices; reclose on/off on circuit breakers; ground relay control on feeders for switching, and control of voltage regulation.

3.4 Benefits Summary

This project addresses safety, asset condition, and reliability concerns associated with the Pawtucket No 1 indoor station. This work benefits all the customers in the City of Pawtucket and the surrounding areas.

3.5 Business and Customer Issues

There are no significant business and customer issues beyond what has been described elsewhere.

3.6 Alternatives

Alternative 1: Install a new Metal Clad [redacted] Station at the Pawtucket No 1

This alternative proposes development of a [redacted] metal clad substation, breaker and a half design, in the Pawtucket No. 1 yard. [redacted] After installation of the new switchgear, load at Pawtucket No 1 will be rearranged to allow for the elimination of the 71 bus.

There are presently eight circuits on section 71, including three network feeders. The three network circuits are currently dedicated feeders with approximately 3.0 MVA of peak load. It is proposed to supply these network circuits from section 73. The remaining circuits will be resupplied from the new station. Three circuits in section 73

will be resupplied from the new station to free up feeders for the three network circuits. This work will reduce loading on section 73 below the rating of the 2,000 Amp bus.

The distribution infrastructure from Pawtucket No 1 is all underground. Therefore, new manhole and ductline systems will be built from the new station out to city streets and intercept the existing underground system when practical. New underground feeder getaways will be installed from the new station and will intercept the existing cables or be routed directly to the riser poles.

The existing manhole and ductline infrastructure predominantly consists of 3-inch conduits installed on city streets. Although the age of this infrastructure is unknown, based on the age of the indoor substation it would be reasonable to assume that the majority of this infrastructure dates back to the early 1900's. The 3-inch duct diameter is not suitable for routing of the proposed solid dielectric cables required for the new feeders. New 5 inch diameter duct is required for the new cable. This plan would install a new manhole and duct system necessary to bypass the limiting 3-inch infrastructure.

The conceptual grade estimate for this plan is $30.600M of which $26.100M is capital, $0.400M is O&M and $4.100M is removal.

Alternative 2: Non-Wires Alternative

The primary driver for this project is to address the asset condition, including the safety and reliability concerns with the Pawtucket No 1 indoor substation. Non Wires Alternatives are not applicable for this project. New supply and distribution infrastructure is the only reasonable alternative to address the asset conditions.

3.7 Safety, Environmental and Project Planning Issues

A detailed cutover plan will be developed for the interconnection of the existing and newly installed feeders. This Plan will be developed during the Final Engineering and Design Phase.

3.8 Execution Risk Appraisal

Number	Detailed Description of Risk / Opportunity	Probability	Impact		Score		Strategy	Pre-Trigger Mitigation Plan	Residual Risk	Post Trigger Mitigation Plan
			Cost	Schedule	Cost	Schedule				
1	Obtaining the required scheduled outage	1	1	1	[redacted]	[redacted]	Accept	Develop plan and increase communication as scheduled outage approaches.	Construction delays may result from outage postponement.	Continue frequent communication until outage work is concluded.
2	Obtaining the proper distribution line easement rights or ability to enact existing rights.	2	2	2	[redacted]	[redacted]	Mitigate	Identify individual to address potential property issues immediately after Distribution Line design is completed.	Unable to acquire proper easements.	Circle back to design to determine potential alternate routes.
3	Material/equipment damaged during substation construction extending schedule	1	2	2	[redacted]	[redacted]	Mitigate	Require contractor to provide site security and be responsible for potential damage.	Vandalism occurs.	Enhance security measures and expedite replacement of materials and/or equipment.

3.9 Permitting

Permit Name	Probability Required (Certain/ Likely/ Unlikely)	Duration To Acquire Permit	Status (Complete/ In Progress Not Applied For)	Estimated Completion Date
EFSB Notice of Intent	Certain	4 Months	Not Applied For	TBD
Building Permit	Certain	3 Months	Not Applied For	TBD
Historic Commission Review	Certain	TBD	Not Applied For	TBD
Pawtucket Street Opening Permit	Certain	3 Months	Not Applied For	TBD

3.10 Investment Recovery

3.10.1 Investment Recovery and Regulatory Implications

Investment recovery will be through standard rate recovery mechanisms approved by appropriate regulatory agencies. Based on current schedule the substation will enter service in FY20 and the distribution projects will be included in each fiscal year's Annual ISR Filing until that time.

3.10.2 Customer Impact

Distribution: This project results in an indicative first full year revenue requirement when the asset is placed in service equal to approximately $2.760M. This is indicative only. The actual revenue requirement will differ, depending upon the timing of the next rate case and/or the timing of the next filing in which the project is included in rate base.

Transmission: This project results in an indicative first full year revenue requirement when the asset is placed in service equal to approximately $0.860M. This is indicative only. Recovery is through Regional Service (RNS) and Local Network Service (LNS) rates.

3.10.3 CIAC / Reimbursement

Not Applicable.

3.11 Financial Impact to National Grid

3.11.1 Cost Summary Table

Distribution:

Project Number	Project Title	Project Estimate Level (%)	Spend	Prior Yrs	Current Planning Horizon ($M) FY17 2016/17	FY18 2017/18	FY19 2018/19	FY20 2019/20	Total
C053657	Southeast Sub (D-Sub)	+50/- 25%	CapEx	-	0.250	1.900	4.100	2.750	9.000
			OpEx	-	-	-	-	-	-
			Removal	-	-	-	-	-	-
			Total	-	0.250	1.900	4.100	2.750	9.000
C053658	Southeast Sub (D-Line)	+50/- 25%	CapEx	-	0.150	1.750	2.250	0.650	4.800
			OpEx	-	-	0.050	0.100	0.050	0.200
			Removal	-	-	0.100	0.500	0.500	1.100
			Total	-	0.150	1.900	2.850	1.200	6.100
C055683	Pawtucket No 1 (D-Sub)	+50/- 25%	CapEx	-	-	-	-	-	-
			OpEx	-	-	-	-	-	-
			Removal	-	0.025	0.175	1.000	2.300	3.500
			Total	-	0.025	0.175	1.000	2.300	3.500
Total Project Sanction			CapEx	-	0.400	3.650	6.350	3.400	13.800
			OpEx	-	-	0.050	0.100	0.050	0.200
			Removal	-	0.025	0.275	1.500	2.800	4.600
			Total	-	0.425	3.975	7.950	6.250	18.600

Transmission:

Project Number	Project Title	Project Estimate Level (%)	Spend	Prior Yrs	Current Planning Horizon ($M) FY17 2016/17	FY18 2017/18	FY19 2018/19	FY20 2019/20	Total
C055563	Southeast Sub (T-Line)	+50/- 25%	CapEx	-	0.100	0.300	0.420	0.180	1.000
			OpEx	-	-	-	-	-	-
			Removal	-	-	-	-	-	-
			Total	-	0.100	0.300	0.420	0.180	1.000
C056343	Southeast Sub (T-Sub)	+50/- 25%	CapEx	-	0.100	0.200	0.240	0.060	0.600
			OpEx	-	-	-	-	-	-
			Removal	-	-	-	-	-	-
			Total	-	0.100	0.200	0.240	0.060	0.600
C055583	Pawtucket No 1 (T-Sub)	+50/- 25%	CapEx	-	0.090	0.720	0.840	0.750	2.400
			OpEx	-	-	-	0.050	0.050	0.100
			Removal	-	-	-	-	-	-
			Total	-	0.090	0.720	0.890	0.800	2.500
C061766	Valley Sub P11 Upgrades	+50/- 25%	CapEx	-	0.010	0.010	0.150	0.130	0.300
			OpEx	-	-	-	-	-	-
			Removal	-	-	-	-	-	-
			Total	-	0.010	0.010	0.150	0.130	0.300
Total Project Sanction			CapEx	-	0.300	1.230	1.650	1.120	4.300
			OpEx	-	-	-	0.050	0.050	0.100
			Removal	-	-	-	-	-	-
			Total	-	0.300	1.230	1.700	1.170	4.400

3.11.2 Project Budget Summary Table

Project Costs Per Business Plan (Distribution)

$M	Prior Yrs (Actual)	Current Planning Horizon ($M) FY16 2015/16	FY17 2016/17	FY18 2017/18	FY19 2018/19	FY20 2019/20	Total
CapEx	0.000	0.055	3.805	6.210	3.960	0.000	14.030
OpEx	0.000	0.013	0.245	0.450	0.285	0.000	0.993
Removal	0.000	0.093	0.302	1.678	2.028	0.000	4.101
Total Cost in Bus. Plan	0.000	0.161	4.352	8.338	6.273	0.000	19.124

Variance (Business Plan-Project Estimate)

$M	Prior Yrs (Actual)	Current Planning Horizon ($M) FY16 2015/16	FY17 2016/17	FY18 2017/18	FY19 2018/19	FY20 2019/20	Total
CapEx	0.000	0.055	3.405	2.560	(2.390)	(3.400)	0.230
OpEx	0.000	0.013	0.245	0.400	0.185	(0.050)	0.793
Removal	0.000	0.093	0.277	1.403	0.528	(2.800)	(0.499)
Total Cost in Bus. Plan	0.000	0.161	3.927	4.363	(1.677)	(6.250)	0.524

Project Costs Per Business Plan (Transmission)

$M	Prior Yrs (Actual)	Current Planning Horizon ($M) FY16 2015/16	FY17 2016/17	FY18 2017/18	FY19 2018/19	FY20 2019/20	Total
CapEx	0.000	0.290	1.450	1.440	0.450	0.000	3.630
OpEx	0.000	0.000	0.000	0.000	0.000	0.000	0.000
Removal	0.000	0.000	0.000	0.000	0.000	0.000	0.000
Total Cost in Bus. Plan	0.000	0.290	1.450	1.440	0.450	0.000	3.630

Variance **(Business Plan-Project Estimate)**

$M	Prior Yrs (Actual)	Current Planning Horizon ($M) FY16 2015/16	FY17 2016/17	FY18 2017/18	FY19 2018/19	FY20 2019/20	Total
CapEx	0.000	0.290	1.160	0.220	(1.050)	(0.990)	(0.370)
OpEx	0.000	0.000	0.000	0.000	(0.050)	(0.050)	(0.100)
Removal	0.000	0.000	0.000	0.000	0.000	0.000	0.000
Total Cost in Bus. Plan	0.000	0.290	1.160	0.220	(1.100)	(1.040)	(0.470)

3.11.3 Cost Assumptions

Cost estimate accuracy is - 25% to +50%. Project sanction cost estimates (+/- 10%) will be developed after final design is completed.

3.11.4 Net Present Value / Cost Benefit Analysis

Not financially driven.

3.11.4.1 NPV Summary Table

Not Applicable.

3.11.5 Additional Impacts

Not Applicable.

3.12 Statements of Support

3.12.1 Supporters

The supporters listed have aligned their part of the business to support the project.

Role	Individual	Responsibilities
Investment Planning	Glen DiConza	Endorses relative to distribution 5-year business plan or emergent work
Investment Planning	Michelle Park	Endorses relative to transmission 5-year business plan or emergent work

Resource Planning	Anne Wyman	Endorses D-Line resources, cost, estimate, schedule and Portfolio alignment
Resource Planning	Mark Phillips	Endorses substation resources, cost, estimate, schedule and Portfolio alignment
Asset Management / Planning	Kasia Kulbacka	Endorses scope, estimate, and schedule with the company's goals, strategies, and objectives
Asset Management / Planning	Alan Labarre	Endorses scope, estimate, and schedule with the company's goals, strategies, and objectives
Engineering / Design	Suzan Martuscello	Endorses substation scope, design, conformance with design standards
Engineering / Design	Mark Browne	Endorses transmission line scope, design, conformance with design standards
Engineering / Design	Len Swanson	Endorses substation scope, design, conformance with design standards
Engineering / Design	Sonny Anand	Endorses Resources, cost estimate, schedule
Project Management	Andrew Schneller	Endorses Resources, cost estimate, schedule

3.12.2 Reviewers

The reviewers have provided feedback on the content/language of the paper.

Function	Individual
Finance	Keith Fowler / Phillip Horowitz
Regulatory	Peter Zschokke
Jurisdictional Delegates	Jim Patterson / Carol Sedewitz
Procurement	Art Curran
Control Center	Michael Gallagher
Control Center	Will Houston

4 Appendices

4.1 Sanction Request Breakdown by Project

$M	C053657	C053658	C055563	C056343	C055583	C055683	Total
CapEx	$2.100	$1.600	$0.400	$0.400	$0.600	$0.000	$5.100
OpEx	$0.000	$0.000	$0.000	$0.000	$0.000	$0.000	$0.000
Removal	$0.000	$0.000	$0.000	$0.000	$0.000	$0.500	$0.500
Total	$2.100	$1.600	$0.400	$0.400	$0.600	$0.500	$5.600

4.2 Other Appendices

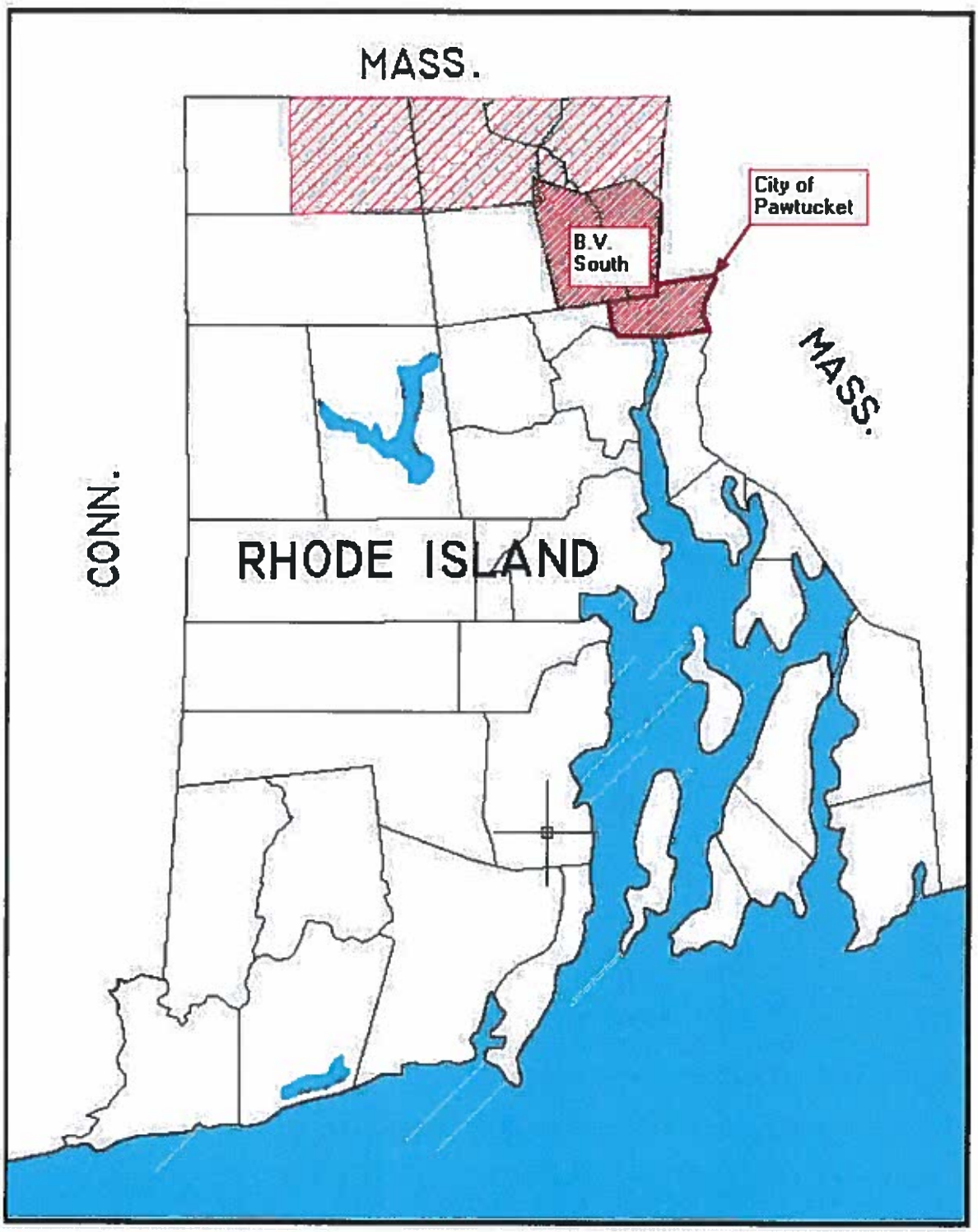

FIGURE 1 – Geographic Area

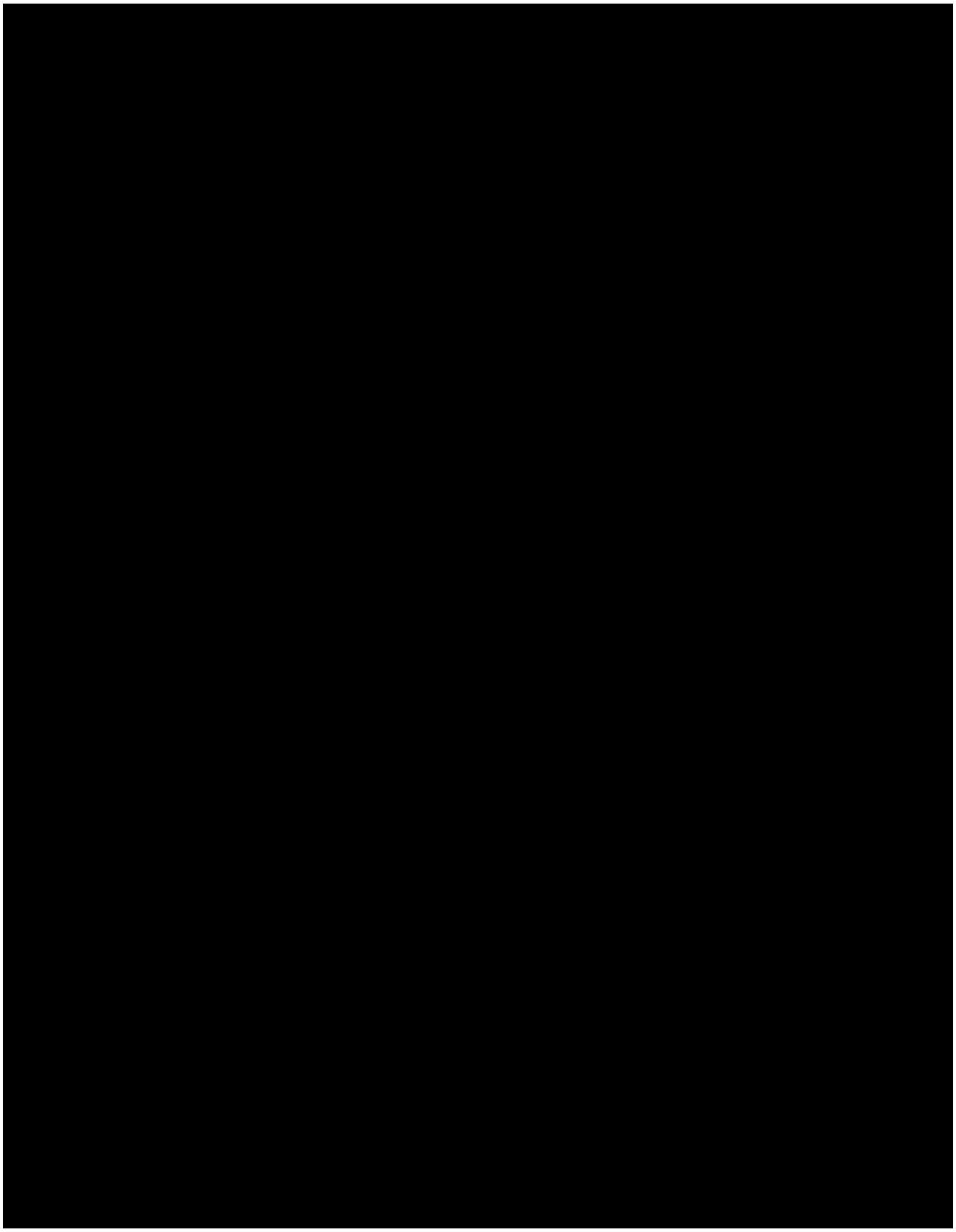

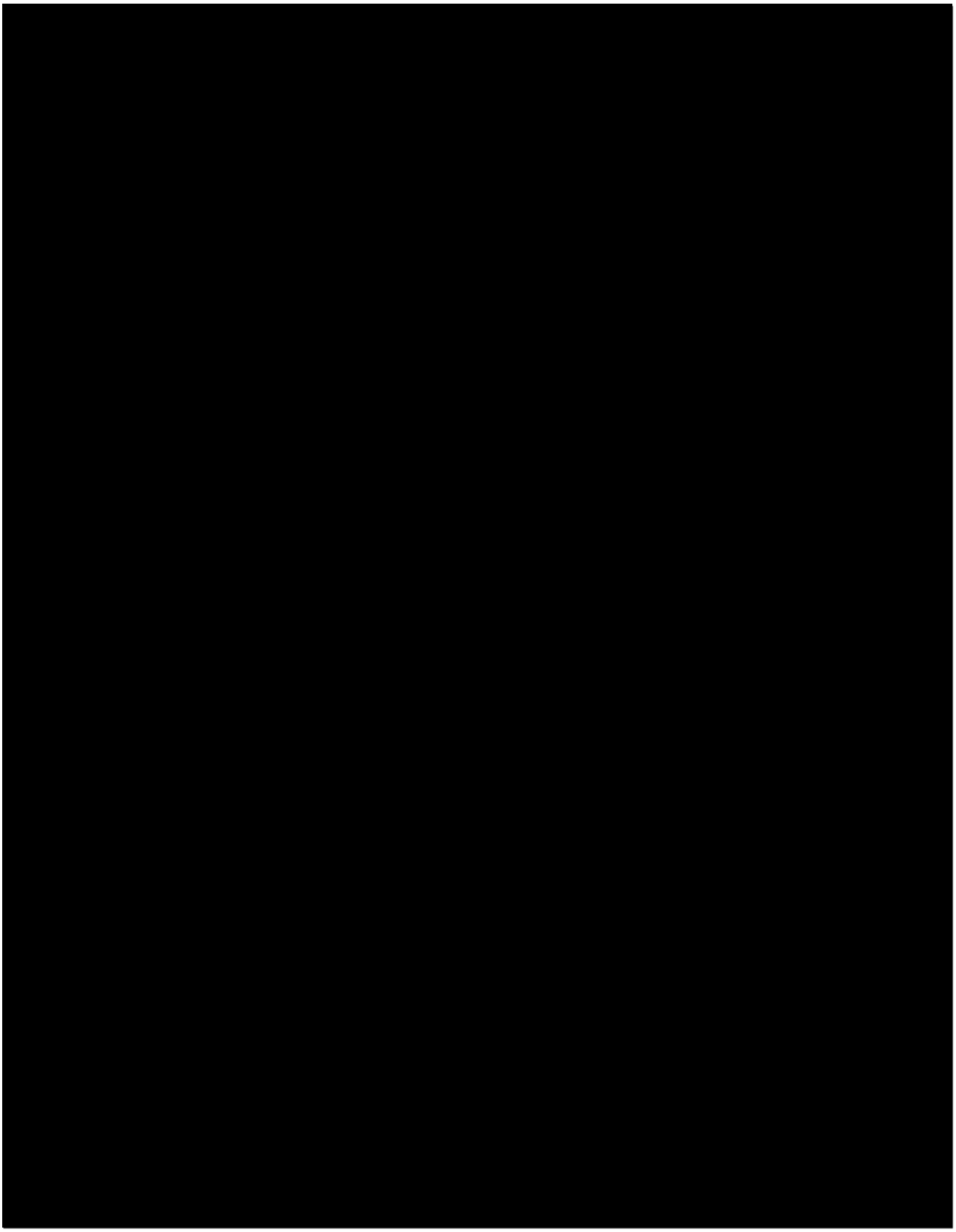

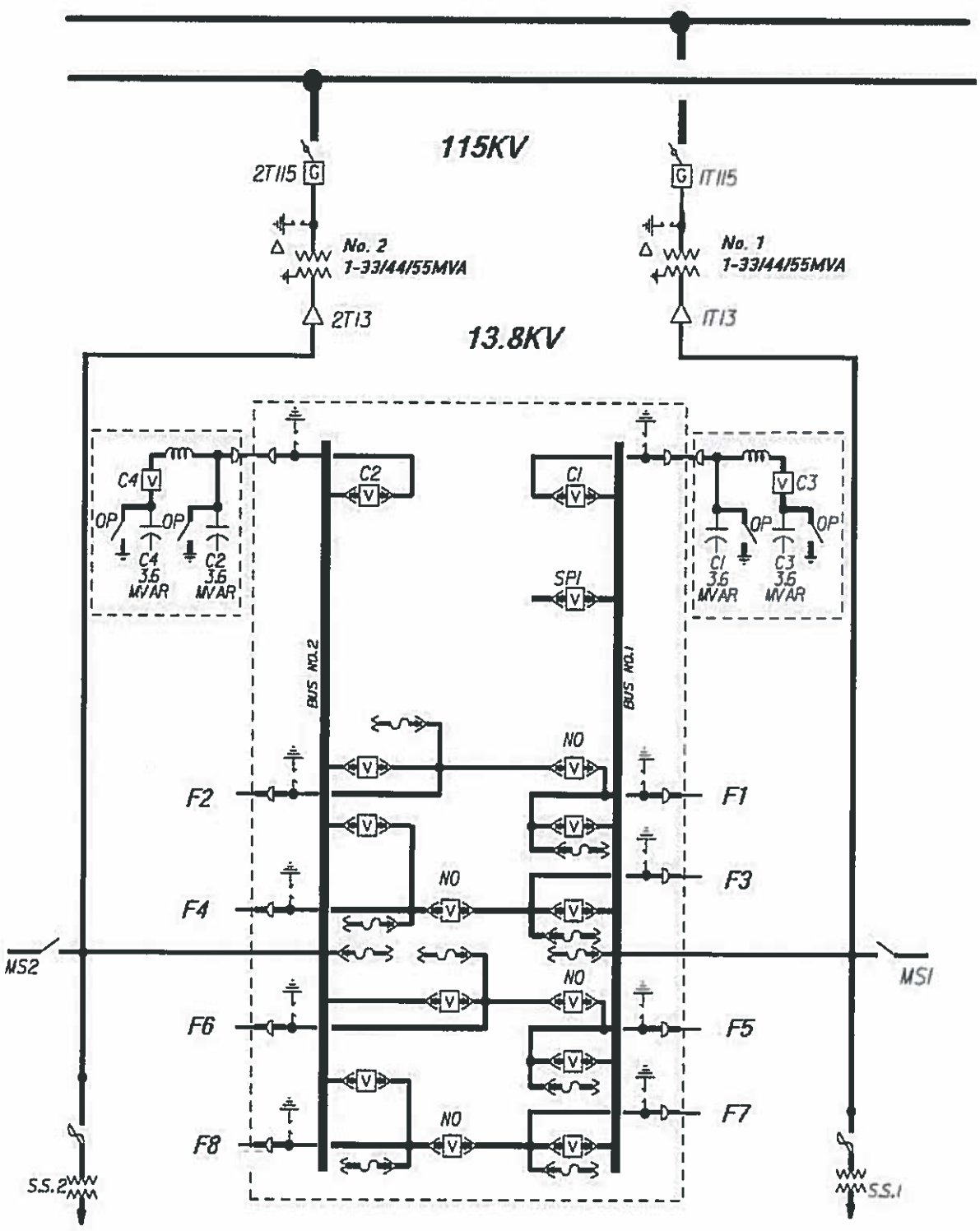

FIGURE 4 – One Line of Proposed Southeast Substation



FIGURE 5 – Proposed Southeast Substation Location

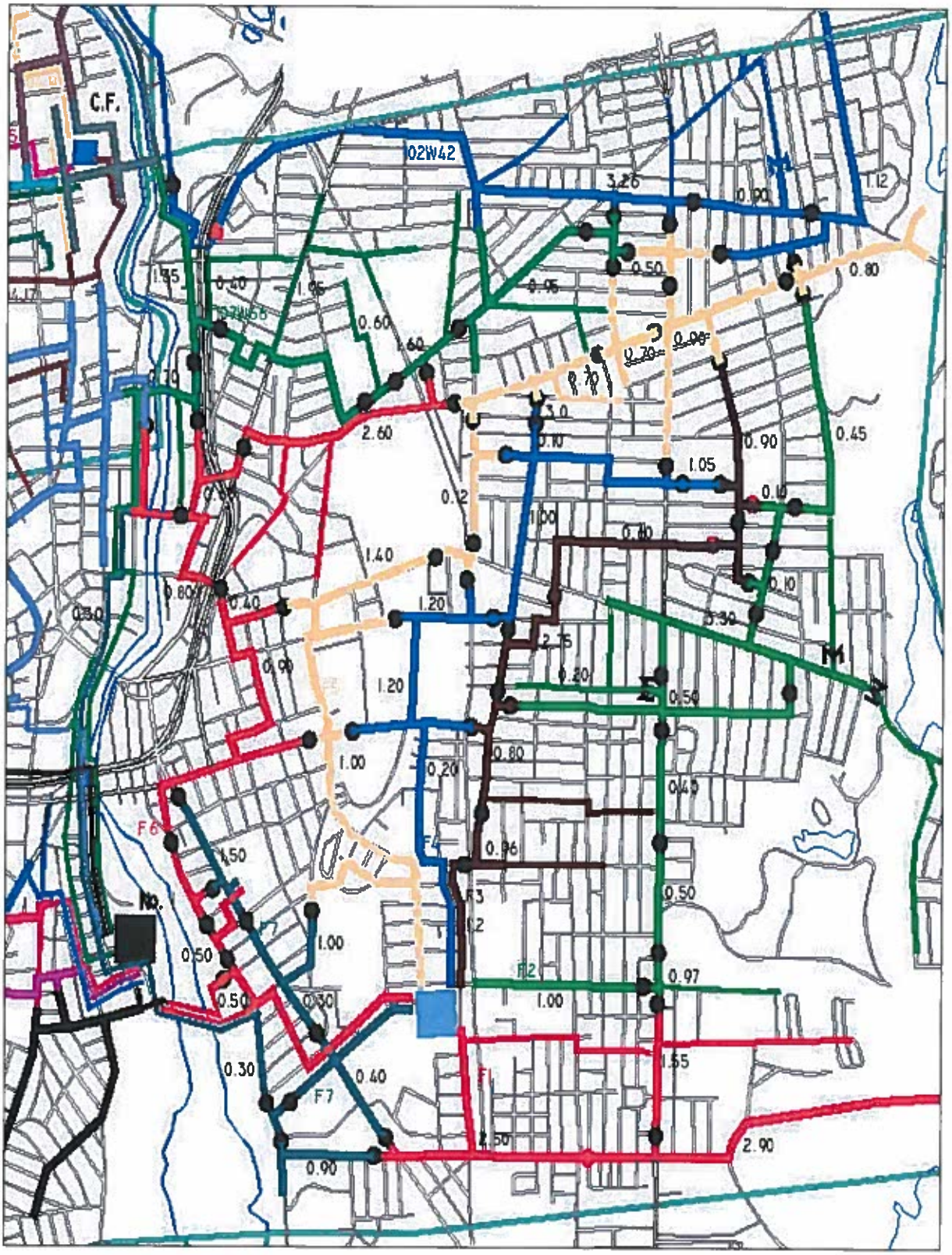

FIGURE 6 – Proposed 13.8 kV Distribution Feeder Layout

THIS PAGE INTENTIONALLY LEFT BLANK

REDACTED

Title:	Westerly Flood Restoration	**Sanction Paper #:**	USSC-15-110
Project #:	C036527, C055215	**Sanction Type:**	Partial Sanction
Operating Company:	The Narragansett Electric Co.	**Date of Request:**	05/13/2015
Author:	Jack P. Vaz	**Sponsor:**	John Gavin, VP Electric Asset Management
Utility Service:	Electricity T&D	**Project Manager:**	Ayo Osimboni

1 Executive Summary

1.1 Sanctioning Summary

This paper requests partial sanction of funding projects C036527and C055215 in the amount $3.500M with a tolerance of +/- 10% for the purposes of performing all engineering activities, permitting, procurement of long lead materials, and to initiate construction activities.

This sanction amount is $3.500M broken down into:

$3.500M Capex
$0.000M Opex
$0.000M Removal

NOTE the potential investment of $8.000M with a tolerance of +50%/- 25%, contingent upon submittal and approval of a Project Sanction paper following completion of all engineering activities.

1.2 Project Summary

This project resolves the March 2010 flooding damage and failure at Westerly substation and addresses long-term area reliability and capacity concerns in the Town of Westerly, RI. This project rebuilds Westerly substation at a higher elevation by utilizing a vacant brick building located within the substation yard. This building will be refurbished to house 15kV metal-clad switchgear. Two 40-MVA delta zigzag transformers will supply this switchgear.

This project retires the existing Westerly substation equipment located within the flood plain. The project supports the long-term load growth in Westerly by increasing the number of available distribution feeders from four to six and by increasing the station transformer size from 20-MVA units to 40-MVA units. By installing delta zigzag supply transformers, Westerly substation's distribution feeder voltages will be brought in phase with those supplied by other area substations. The modification of voltage phasing will eliminate the need to drop load during switching operations. This will expose customers

to fewer planned outages, provide for greater switching flexibility, and for quicker restorations times in the event of an outage.

1.3 Summary of Projects

Project Number	Project Type (Elec only)	Project Title	Estimate Amount ($M)
C036527	D-Sub	Westerly Flood Restoration (D-Sub)	6.400
C055215	D-Line	Westerly Flood Restoration (D-Line)	1.600
		Total	8.000

1.4 Associated Projects

Project Number	Project Title	Estimate Amount ($M)
C024175	Chase Hill Sub (D Line)	$ 7.31
C024176	Chase Hill Sub (D Sub)	$ 10.03
C030165	Chase Hill Sub (T Line)	$ 0.53
C030166	Chase Hill Sub (T Sub)	$ 1.42
C034102	Ashaway Retire (D Sub)	$ 0.20
C036233	Hope Valley Retire (D Sub)	$ 0.20
C036234	Hope Valley Retire (D Line)	$ 0.03
	Total	$ 19.72

1.5 Prior Sanctioning History

Not Applicable

1.6 Next Planned Sanction Review

Date (Month/Year)	Purpose of Sanction Review
Nov - 2017	Project Sanction

1.7 Category

Category	Reference to Mandate, Policy, or NPV Assumptions
○ Mandatory ◉ Policy- Driven ○ Justified NPV	Ocean State Substation Flood Mitigation Report – June 30, 2010 Rhode Island Flood Mitigation Plan - October 12, 2012 (Revision 1)

1.8 Asset Management Risk Score

Asset Management Risk Score: 42

Primary Risk Score Driver: (Policy Driven Projects Only)

◉ Reliability ○ Environment ○ Health & Safety ○ Not Policy Driven

1.9 Complexity Level

○ High Complexity ◉ Medium Complexity ○ Low Complexity ○ N/A

Complexity Score: 23

1.10 Process Hazard Assessment

A Process Hazard Assessment (PHA) is required for this project:

◉ Yes ○ No

1.11 Business Plan

Business Plan Name & Period	Project included in approved Business Plan?	Over / Under Business Plan	Project Cost relative to approved Business Plan ($)
New England Distribution FY16-FY20	◉ Yes ○ No	○ Over ◉ Under ○ NA	$1.657M

1.12 If cost > approved Business Plan how will this be funded?

N.A..

1.13 Current Planning Horizon

	Current Planning Horizon					
$M	FY16 2015/16	FY17 2016/17	FY18 2017/18	FY19 2018/19	FY20 2019/20	Total
CapEx		0.660	3.060	2.600	0.840	7.160
OpEx				0.010	0.010	0.020
Removal			0.100	0.110	0.610	0.820
CIAC/Reimbursement						
Total		0.660	3.160	2.720	1.460	8.000

1.14 Key Milestones

Milestone	Target Date: (Month/Year)
Initial Partial Sanction	May - 2015
Start Preliminary Engineering (kick-off meeting)	Apr – 2016
Preliminary Engineering Complete (Station TSD)	Mar – 2017
Engineering Design Complete – EDC	Oct – 2017
Project Sanction	Nov – 2017
Construction Start	Mar – 2018
Construction Complete – CC	Sep – 2019
Ready for Load – RFL	Oct – 2019
Project Closure Report	Feb – 2020

1.15 Resources, Operations and Procurement

Resource Sourcing			
Engineering & Design Resources to be provided	☑ Internal		☑ Contractor
Construction/Implementation Resources to be provided	☑ Internal		☑ Contractor
Resource Delivery			
Availability of internal resources to deliver project:	○ Red	○ Amber	◉ Green
Availability of external resources to deliver project:	○ Red	○ Amber	◉ Green
Operational Impact			
Outage impact on network system:	○ Red	○ Amber	◉ Green
Procurement Impact			
Procurement impact on network system:	○ Red	○ Amber	◉ Green

REDACTED

1.16 Key Issues (include mitigation of Red or Amber Resources)

1	No known issues exist at this time
2	
3	

1.17 Climate Change

Contribution to National Grid's 2050 80% emissions reduction target:	◉ Neutral	○ Positive	○ Negative
Impact on adaptability of network for future climate change:	◉ Neutral	○ Positive	○ Negative

1.18 List References

1	Conceptual Engineering Report – Rebuild Westerly Substation, Oct. 2013
2	
3	

REDACTED

2 *Decisions*

The US Sanctioning Committee (USSC) at a meeting held on **May 13, 2015**:

(a) APPROVED the investment of $3.500M and a tolerance of +/- 10 % for the purposes of performing all engineering activities, permitting, procurement of long lead materials, and to initiate construction activities.

(b) NOTED the potential investment $8.000M to and a tolerance of +50%/- 25 %, contingent upon submittal and approval of a Project Sanction paper following completion of all engineering activities.

(c) NOTED that **Ayo Osimboni** has the approved financial delegation to undertake the activities stated in (a).

Signature.....Date 5/14/15

Margaret Smyth
US Chief Financial Officer
Chairman, US Sanctioning Committee

3 Sanction Paper Detail

Title:	Westerly Flood Restoration	**Sanction Paper #:**	USSC-15-110
Project #:	C036527, C055215	**Sanction Type:**	Partial Sanction
Operating Company:	The Narragansett Electric Co.	**Date of Request:**	05/13/2015
Author:	Jack P. Vaz	**Sponsor:**	John Gavin, VP Electric Asset Management
Utility Service:	Electricity T&D	**Project Manager:**	Ayo Osimboni

3.1 Background

Westerly is a 34.5/12.47 kV substation equipped with two 20 MVA transformers that supply four distribution feeders. The station supplies 9,200 customers with a peak demand of 36 MW in the Town of Westerly. The distribution voltage established at this station does not phase with the rest of the system in the area. Therefore, before switching Westerly feeders to other stations customers are exposed to short duration outages.

Westerly substation is located in close proximity to the Pawcatuck River. In March 2010, flooding occurred in this area and flood waters peaked at approximately six feet in the substation yard. All the equipment in the substation yard and inside the control house was damaged. All roads leading to the substation were impassable and access to the station was not possible for an extended period of time.

Once flooding conditions subsided, a mobile substation was sited and energized on Perkins Avenue in Westerly to restore customer service. Additional customer service was restored using distribution feeder ties to other stations and a pad-mounted transformer was installed [redacted] near existing 34.5kV and 12.47kV distribution infrastructure.

In preparation for the 2010 summer peak load, portions of Westerly substation were placed back in service in May and June. With Westerly substation only partially restored, supplying load in Westerly over the summer was challenging and resulted in the need to shed customer load to maintain equipment operating safely within its rated capability. To mitigate the need to continue to shed load, generation was installed while Westerly substation was being restored to full operation. By mid summer 2010, permanent repairs were made at Westerly substation and the generation was removed along with the pad-mounted transformer that had been installed on an emergency basis.

To mitigate future flood damage risk at Westerly substation, a long-term plan was developed in 2010. The plan recommended abandoning the Westerly substation site and expanding a proposed substation that was being permitted in the Town of Hopkinton on company owned land west of Route 3. The recommendation was to install a second power transformer and four additional feeders at Hopkinton substation. This investment would provide capacity to retire Westerly substation.

The company was not successful in permitting the substation site located west of Route 3 due to concerns [redacted] a site suitable for substation construction was identified east of Route 3 and acquired by the company. The zoning ordinance has been amended by the Town to allow for substation construction on this site. The new site is located near the intersection of Ashaway and Chase Hill Road and is referred to as the Chase Hill substation site.

With respect to the Company's plans to retire Westerly substation, the new site resulted in significantly greater distribution line costs and right-of-way construction and maintenance challenges. The site is further away from the Westerly load center as compared to the original site. While the additional distribution distance was considered in the decision to move to the new site, further detailed design reviews indentified the significant increased right-of-way construction costs. A comprehensive review by Operations also identified challenges with access, initial construction, and long-term maintenance of distribution circuits on the right-of-way.

Due to the aforementioned challenges, the plan to install 8 feeders at the Chase Hill substation site has been modified and the Company will only install 4 feeders. The 4 feeders removed from the Chase Hill project scope were replaced with the plan detailed in this paper for 4 feeders to be supplied from a rebuilt Westerly substation. Rebuilding Westerly substation is more economical as compared to expanding Chase Hill substation and results in significantly shorter distribution feeders. Reduced feeder mainline exposure results in better anticipated service reliability performance and lower operational costs when compared with the original Chase Hill projects.

3.2 Drivers

This project resolves the March 2010 flooding damage and failure at Westerly Substation and improves long-term area reliability. This investment needs to be made now to mitigate future flooding at Westerly substation and improve area reliability for approximately 9,200 customers.

This project corrects distribution system voltage phasing issues by installing delta zigzag transformers which result in Westerly substation feeders that are in phase with the rest of the system in this area. The modification of voltage phasing will eliminate the need to drop load during switching operations. This will expose customers to fewer

planned outages, provide for greater switching flexibility, and for quicker restorations times in the event of an outage.

3.3 Project Description

The following work is required at Westerly substation to mitigate the risk of future flood damage, increase the supply capacity to Westerly, and correct area phasing challenges to improve reliability. Purchase and install the following major equipment:

- Two 34.5kV circuit switchers.
- Two 34.5/13.2 kV 24/32/40 MVA LTC delta zigzag transformers.
- New 15kV metal-clad breaker and half switchgear with breakers for six feeders and two capacitor banks. Initial construction will consist of four feeders.
- Two 2-stage open air 7.2MVar cap banks (3.6MVar per stage)

Once the new station is cutover all the equipment in the old yard shall be removed.

3.4 Benefits Summary

This project resolves the March 2010 flooding damage and failure at Westerly substation. This project improves customer reliability by resolving voltage phasing issues in the area; that is, feeder ties are currently made by first dropping the customer, then by switching them over to a second supply.

3.5 Business and Customer Issues

There are no significant business and customer issues beyond what has been described elsewhere.

3.6 Alternatives

Alternative 1: Expand Chase Hill Substation

This alternative would expand Chase Hill substation by installing a second 40MVA power transformer and 4 additional distribution feeders. The estimated cost of this alternative is $11M. This alternative is not recommended because:

- It has a higher cost than the preferred plan ($11M vs $8M).
- The Chase Hill site is remote from the Westerly load center resulting in significant right-of-way construction for the distribution feeders.
- Additional investigation by Design and Operations to build feeders on the right of way has indentified significant challenges with access, initial construction, and long-term maintenance of these circuits.

- There is no economic or reliability benefit to supplying Westerly load from Chase Hill substation. Feeders supplied from a rebuilt Westerly substation will be much shorter resulting in significant less mainline exposure and better anticipated service reliability performance.

Alternative 2: Do Nothing or Deferral

This alternative is not recommended. Deferring this investment would continue to expose Westerly customers to prolonged outages in the event this site floods in the future. Deferral would also leave the Westerly substation feeders out of phase with the rest of the system resulting in the need to interrupt customers during switching operations and increasing the restoration times in the event of an outage.

3.7 Safety, Environmental and Project Planning Issues

A detailed cutover plan will be developed for the interconnection of the existing and newly installed feeders. This Plan will be developed during the Final Engineering and Design Phase.

3.8 Execution Risk Appraisal

Number	Detailed Description of Risk / Opportunity	Probability	Impact		Score		Strategy	Pre-Trigger Mitigation Plan	Residual Risk	Post Trigger Mitigation Plan
			Cost	Schedule	Cost	Schedule				
1	Obtaining the required scheduled outage	1	1	1	1	1	Accept	Develop plan and increase communication as scheduled outage approaches.	Construction delays may result from outage postponement.	Continue frequent communication until outage work is concluded.
2	Obtaining the proper distribution line easement rights or ability to enact existing rights.	2	2	2	4	4	Mitigate	Identify individual to address potential property issues immediately after Distribution Line design is completed.	Unable to acquire proper easements.	Circle back to design to determine potential alternate routes.
3	Material/equipment damaged during substation construction extending schedule	1	2	2	2	2	Mitigate	Require contractor to provide site security and be responsible for potential damage.	Vandalism occurs.	Enhance security measures and expedite replacement of materials and/or equipment.

3.9 Permitting

Permit Name	Probability Required (Certain/ Likely/ Unlikely)	Duration To Acquire Permit	Status (Complete/ In Progress Not Applied For)	Estimated Completion Date
RIDEM	Likely	6 mos.	Not Applied For	TBD

3.10 Investment Recovery

3.10.1 Investment Recovery and Regulatory Implications

Based on current schedules the substation will be in service in FY'20 and will be included in each Fiscal Year's Annual ISR filing until that time.

3.10.2 Customer Impact

This project results in an indicative first full year revenue requirement when the asset is placed in service equal to approximately $1.432M. This is indicative only. The actual revenue requirement will differ, depending upon the timing of the next rate case and/or the timing of the next filing in which the project is included in rate base.

3.10.3 CIAC / Reimbursement

Not Applicable.

3.11 Financial Impact to National Grid

3.11.1 Cost Summary Table

Project Number	Project Title	Project Estimate	Spend ($M)	Current Planning Horizon FY16 2015/16	FY17 2016/17	FY18 2017/18	FY19 2018/19	FY20 2019/20	Total
C036527	Westerly Flood Restoration (D-Sub)	Est Lvl (-25% +50%)	CapEx		0.540	2.560	2.000	0.500	5.600
			OpEx						
			Removal			0.100	0.100	0.600	0.800
			Total		0.540	2.660	2.100	1.100	6.400
C055215	Westerly Flood Restoration (D-Line)	Est Lvl (-25% +50%)	CapEx		0.120	0.500	0.600	0.340	1.560
			OpEx				0.010	0.010	0.020
			Removal				0.010	0.010	0.020
			Total		0.120	0.500	0.620	0.360	1.600
Total Project Sanction			CapEx		0.660	3.060	2.600	0.840	7.160
			OpEx				0.010	0.010	0.020
			Removal			0.100	0.110	0.610	0.820
			Total		0.660	3.160	2.720	1.460	8.000

3.11.2 Project Budget Summary Table

Project Costs Per Business Plan

	Current Planning Horizon					
	FY16	FY17	FY18	FY19	FY20	
$M	2015/16	2016/17	2017/18	2018/19	2019/20	Total
CapEx	0.650	4.050	3.600	0.840		9.140
OpEx	0.022	0.121	0.120	0.044		0.307
Removal	0.010	0.045	0.114	0.041		0.210
Total Cost in Bus. Plan	0.682	4.216	3.834	0.925		9.657

Variance (Business Plan-Project Estimate)

	Current Planning Horizon					
	FY16	FY17	FY18	FY19	FY20	
$M	2015/16	2016/17	2017/18	2018/19	2019/20	Total
CapEx	0.650	3.390	0.540	(1.760)	(0.840)	1.980
OpEx	0.022	0.121	0.120	0.034	(0.010)	0.287
Removal	0.010	0.045	0.014	(0.069)	(0.610)	(0.610)
Total Cost in Bus. Plan	0.682	3.556	0.674	(1.795)	(1.460)	1.657

3.11.3 Cost Assumptions

Cost estimate accuracy is - 25% to +50%. Project sanction cost estimates (+/- 10%) will be developed after final design is completed.

3.11.4 Net Present Value / Cost Benefit Analysis

Not financially driven.

3.11.4.1 NPV Summary Table

Not Applicable.

3.11.5 Additional Impacts

There are no additional impacts.

3.12 Statements of Support

3.12.1 Supporters

The supporters listed have aligned their part of the business to support the project.

Role	Individual	Responsibilities
Investment Planning	Glen DiConza	Endorses relative to distribution 5-year business plan or emergent work
Resource Planning	Anne Wyman	Endorses D-Line resources, cost, estimate, schedule and

		Portfolio alignment
Resource Planning	Mark Phillips	Endorses substation resources, cost, estimate, schedule and Portfolio alignment
Engineering / Design	Suzan Martuscello	Endorses substation scope, design, conformance with design standards
Engineering / Design	Len Swanson	Endorses substation scope, design, conformance with design standards
Asset Management / Planning	Alan Labarre	Endorses scope, estimate, and schedule with the company's goals, strategies, and objectives
Project Management	Andrew Schneller	Endorses Resources, cost estimate, schedule

3.12.2 Reviewers

The reviewers have provided feedback on the content/language of the paper.

Function	Individual
Finance	Keith Fowler / Phillip Horowitz
Regulatory	Peter Zschokke
Jurisdictional Delegates	Jim Patterson
Procurement	Art Curran
Control Center	Michael Gallagher
Control Center	Will Houston

4 Appendices

4.1 Sanction Request Breakdown by Project

$M	C036527	C055215	Total
CapEx	2.800	0.700	3.500
OpEx			0.000
Removal			0.000
Total	2.800	0.700	3.500

4.2 Other Appendices



FIGURE 1 – WESTERLY SUBSTATION FLOODING

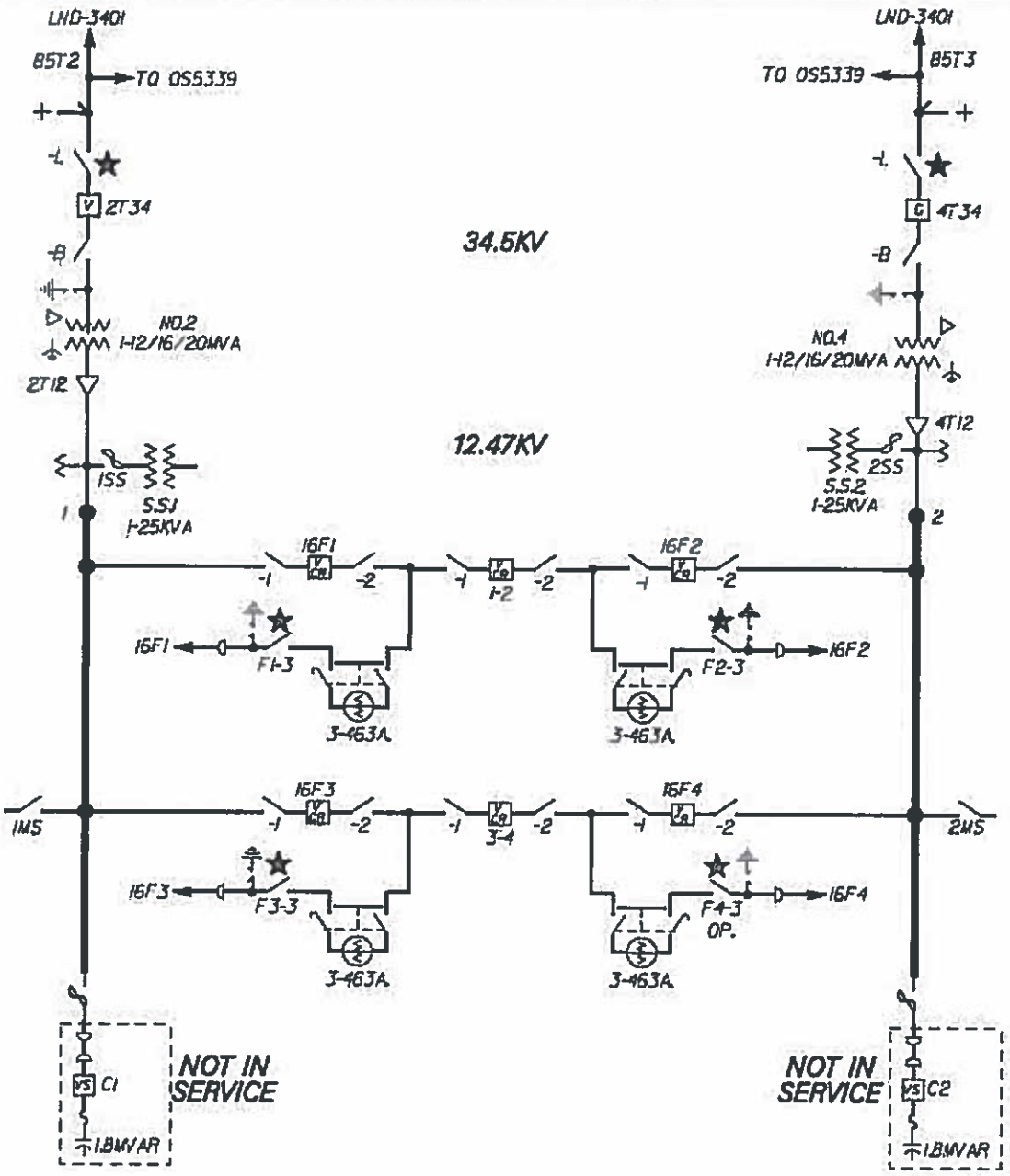

FIGURE 2 – EXISTING WESTERLY ONE-LINE

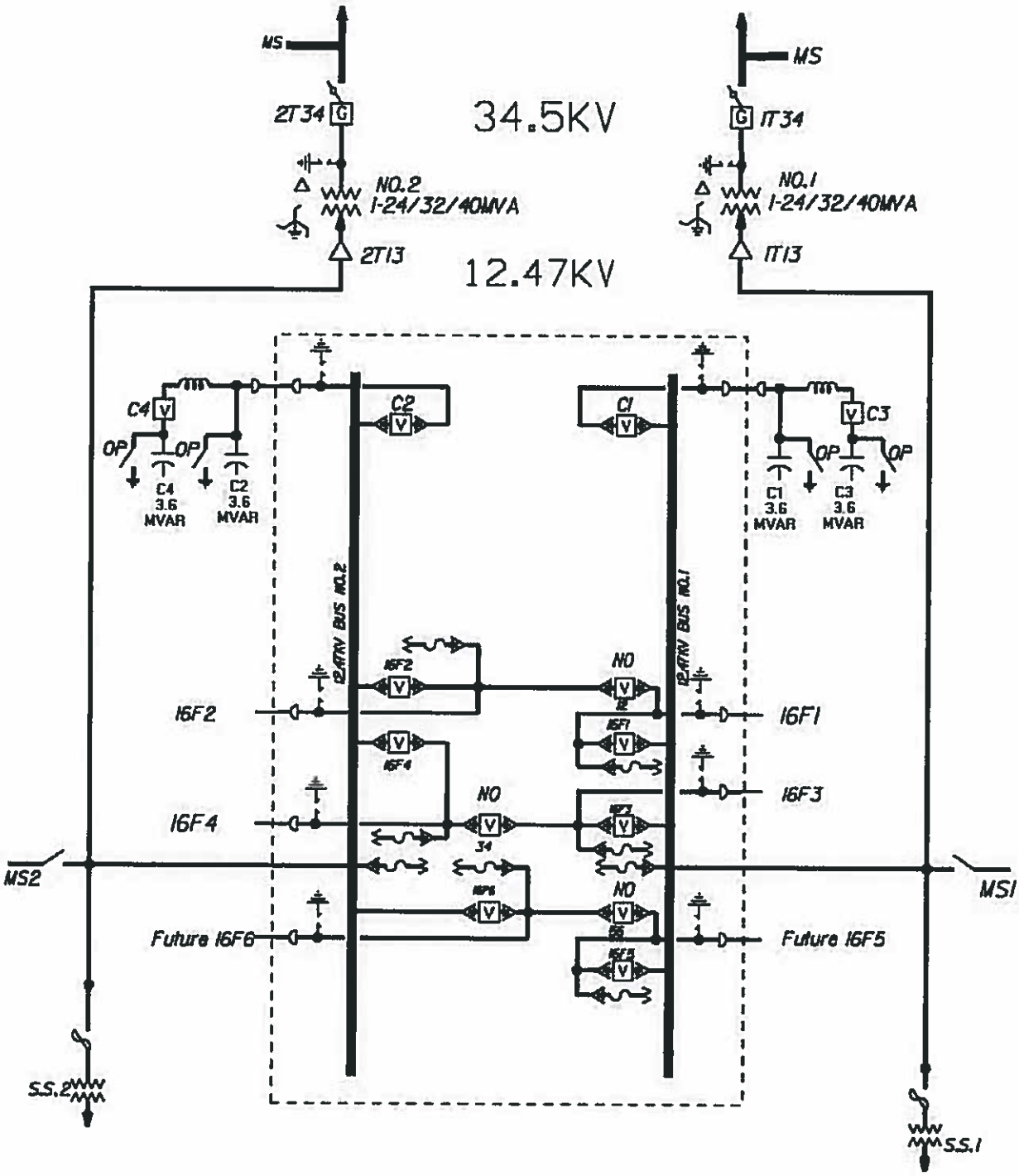

FIGURE 3 – PROPOSED WESTERLY ONE-LINE

This document has been reviewed for Critical Energy/Electric Infrastructure Information (CEII). 7/23/2018
REDACTED

Short Form Sanction Paper

nationalgrid

Title:	West Cranston #21 No.2 Transformer Replacement	**Sanction Paper #:**	USSC-15-290 v2
Project #:	C055844; C058300	**Sanction Type:**	Sanction
Operating Company:	The Narragansett Electric Co.	**Date of Request:**	7/10/2018
Author:	Matthew Place	**Sponsor:**	Carol A. Sedewitz, VP Electric Asset Management
Utility Service:	Electricity T&D	**Project Manager:**	Matthew Place

1 Executive Summary

1.1 Sanctioning Summary

This paper requests sanction of C055844 & C058300 in the amount of $3.950M with a tolerance of +/- 10% for the purposes of full implementation.

This sanction amount is $3.950M broken down into:
$3.886M Capex
$0.000M Opex
$0.064M Removal

With a CIAC/Reimbursement of $0.210M

This project has undergone a Capital Efficiency Review with the following determination:

This project is in final design and/or has secured the necessary agency approvals to proceed and is ready to be released for construction. At this stage, re-evaluation of the project design would likely result in significant delays to the project schedule and an increase in cost. This project will be evaluated for any procurement or construction efficiency opportunities upon its release for construction.

1.2 Project Summary

The No.2 transformer, [redacted] at West Cranston #21 substation, located at 100 Laten Knight Road in Cranston, RI, is in poor condition and in need of replacement. The transformer will be upgraded to a 40 MVA unit in order to mitigate the need to shed load for the loss of the No.1 transformer or supply line at this station and will provide capacity for future station expansion in order to accommodate load growth in the area.

2 Project Detail

2.1 Background

The No.2, 3-phase transformer with load tap changer (LTC) at West Cranston #21 substation needs replacement due to its current poor condtion. The transformer is [redacted] manufactured by Allis Chalmers in approximately October 1970.

The barrier board between the transformer main tank and the LTC compartment has deteriorated, allowing the insulating oil to leak either into the main tank or the LTC compartment. The normal functionality of the transformer is to have separate exclusive insulating oil compartments for the main tank and the LTC compartments. The various connections per phase have loosened over time and gaskets have deterioraited. The main tank insulating oil leaks into the LTC compartment causing overfill and the need to drain the LTC often. For example, the LTC compartment required draining 3 times within a 5 month span. Additionally, the on-line LTC Dissolved Gas Analysis is inconclusive because the main tank is generating Ethylene gas, which provides an inaccurate analysis of the condition of the LTC. Furthermore, the main tank oil level is low requiring the need to add oil to the main tank. As a result of these and other factors (e.g. transformer vintage, high-side aluminum windings, and the projected loading in the area), the Company made the decision to replace this transformer with a 40 MVA unit.

Based on current and projected transformer loads at the West Cranston #21 substation, the T1 and T2 transformers have a summer emergency rating of 29.9 MVA and the transformers would be overloaded if under a contingency situation.

Additionally, the West Cranston #21 substation was designed and permitted for a six-feeder station. It currently consists of three 12.47kV feeders with the ability to add three more in the future. The Company previously considered adding feeders to this station, but first needed to upgrade the station's transformers. The station's peak load is approximately 30.4 MW and the 20 MVA transformers limit the loading at the station. Therefore, any future expansion will require replacing the 20 MVA units with larger 40 MVA units. In addition, 40 MVA transformers are standard for stations with six feeders to eliminate customer exposure to extended outages due to the loss of one transformer or supply line. This will also assist with future expansion in the area.

2.2 Drivers

Improving poor asset condition is the primary driver for this project. The transformer LTC compartment has failed and needs to be addressed. The secondary driver for this project is to improve system capacity. If a transformer or supply line is out of service, the station will exceed the emergency rating of the transformers and the installation of the 40MVA transformer will mitigate this risk.

2.3 *Project Description*

This project will replace the No.2 LTC transformer [redacted] with a larger capacity LTC transformer [redacted] The project will also install two new 15kV, 1200A 20kA vacuum relayed circuit breakers and will include foundation and structural changes (e.g. two aluminum Coupling Capacitor Voltage Transformer (CCVT) structures, one oil containment system). In addition, the existing electro-mechanical transformer protection for both transformers will be upgraded to processor-based. New alarm points will be added to the existing Remote Terminal Unit via fiber-optic cable for remote status, control and monitoring of the switching devices and transformers.

2.4 *Benefits*

Replacement of the transformer with an upgraded unit will eliminate the failed LTC compartment, allow for accurate assest condition monitoring and reduce maintenance activities. In addition, the increased capacity will assist with the projected load growth in the area, and will improve the contingency deficit. In summary, this project will assist with providing reliable service to the Company's customers in this area.

2.5 *Business & Customer Issues*

There are a number of [redacted] projects either in construction or proposed on the feeders off of West Cranston #21 Substation. These aggregate [redacted] projects will trigger 3V0 at the substation by the Ready For Load (RFL) date. This project will install one set of 3 single phase [redacted] CCVTs on the high side of each Transformer No.1 & 2 and utilize the proposed directional overcurrent (OC) relay for 59N function. The 59N element from Transformer No.1 & 2 will trip the respective bus No.1 & 2 feeder breakers and not lock them out.

To take an outage for the West Cranston #21 T2 Replacement project, the New London Ave Substation must be in service, including the distribution feeders. Any delays to the New London Ave project (e.g. material delivery) could have an impact on this Transformer No.2 replacement project.

2.6 *Alternatives*

Alternative 1: Deferment

Deferment is not recommended as the transformer LTC compartment has failed and continued maintenance will become costly. The present condition affects the Company's ability to monitor the condition of this transformer, and has a higher probability of failure due to its vintage and design.

Alternative 2: Replace with the same capacity.

Replacing the transformer with the same capacity is not recommended due to the load growth in the area along with the contingency deficit.

Alternative 3: Non-wires alternative.

There is not a non-wires alternative because it is an asset condition project.

2.7 *Investment Recovery*

2.7.1 Customer Impact

This project results in an indicative first full year revenue requirement when the asset is placed in service equal to approximately $0.658M.

3 Related Projects, Scoring, Budgets

3.1 *Summary of Projects*

Project Number	Project Type (Elec only)	Project Title	Estimate Amount ($M)
C055844	D-Sub	West Cranston #21 No.2 Transformer Replacement	3.900
C058300	T-Line	Tx Asset Rplmt Blanket Line	0.050
		Total	3.950

3.2 *Associated Projects*

Project Number	Project Title	Estimate Amount ($M)
C079081	Southern Sky Renewabels	2.232
	Total	2.232

3.3 *Prior Sanctioning History*

Date	Governance Body	Sanctioned Amount	Potential Project Investment	Sanction Type	Potential Investment Tolerance
1/5/2016	USSC	$1.630M	$3.093M	Partial	+200/-50%

3.4 *Category*

Category	Reference to Mandate, Policy, NPV, or Other
○ Mandatory	Distribution Substation Transformers, 2009
◉ Policy- Driven	
○ Justified NPV	
○ Other	

3.5 *Asset Management Risk Score*

Asset Management Risk Score: **39**

Primary Risk Score Driver: (Policy Driven Projects Only)

◉ Reliability ○ Environment ○ Health & Safety ○ Not Policy Driven

3.6 *Complexity Level*

○ High Complexity ◉ Medium Complexity ○ Low Complexity ○ N/A

Complexity Score: **20**

3.7 *Next Planned Sanction Review*

Date (Month/Year)	Purpose of Sanction Review
December 2019	Project Closure Sanction

4 Financial

4.1 Business Plan

Business Plan Name & Period	Project included in approved Business Plan?	Over / Under Business Plan	Project Cost relative to approved Business Plan ($)
FY19-23 NE Distribution & Transmission	◉ Yes ○ No	◉ Over ○ Under ○ NA	0.914M

4.1.1 If cost > approved Business Plan how will this be funded?

Re-allocation of funds within the portfolio has been managed and approved by Resource Planning to meet jurisdictional budgetary, statutory and regulatory requirements.

4.2 CIAC / Reimbursement

$M	Prior Yrs	Yr. 1 2018/19	Yr. 2 2019/20	Yr. 3 2020/21	Yr. 4 2021/22	Yr. 5 2022/23	Yr. 6 + 2023/24	Total
CIAC/Reimbursement	0.000	0.210	0.000	0.000	0.000	0.000	0.000	0.210

4.3 Cost Summary Table

Project Number	Project Title	Project Estimate Level (%)	Spend	Prior Yrs	Current Planning Horizon ($M) Yr. 1 2018/19	Yr. 2 2019/20	Yr. 3 2020/21	Yr. 4 2021/22	Yr. 5 2022/23	Yr. 6 + 2023/24	Total
C055844	West Cranston #21 No.2 Transformer Replacement	Est Lvl (e.g. +/- 10%)	CapEx	0.584	3.024	0.225	-	-	-	-	3.833
			OpEx	-	-	-	-	-	-	-	-
			Removal	0.003	0.064	-	-	-	-	-	0.067
			Total	0.587	3.088	0.225	-	-	-	-	3.900
C058300	Tx Asset Rplmt Blanket Line	Est Lvl (e.g. +/- 10%)	CapEx	-	0.050	-	-	-	-	-	0.050
			OpEx	-	-	-	-	-	-	-	-
			Removal	-	-	-	-	-	-	-	-
			Total	-	0.050	-	-	-	-	-	0.050

4.4 *Project Budget Summary Table*

D-Sub

Project Costs Per Business Plan

		Current Planning Horizon ($M)						
$M	Prior Yrs (Actual)	Yr. 1 2018/19	Yr. 2 2019/20	Yr. 3 2020/21	Yr. 4 2021/22	Yr. 5 2022/23	Yr. 6 + 2023/24	Total
CapEx	0.584	2.400	0.000	0.000	0.000	0.000	0.000	2.984
OpEx	0.000	0.000	0.000	0.000	0.000	0.000	0.000	0.000
Removal	0.003	0.049	0.000	0.000	0.000	0.000	0.000	0.052
Total Cost in Bus. Plan	0.587	2.449	0.000	0.000	0.000	0.000	0.000	3.036

Variance (Business Plan-Project Estimate)

		Current Planning Horizon ($M)						
$M	Prior Yrs (Actual)	Yr. 1 2018/19	Yr. 2 2019/20	Yr. 3 2020/21	Yr. 4 2021/22	Yr. 5 2022/23	Yr. 6 + 2023/24	Total
CapEx	0.000	(0.624)	(0.225)	0.000	0.000	0.000	0.000	(0.849)
OpEx	0.000	0.000	0.000	0.000	0.000	0.000	0.000	0.000
Removal	0.000	(0.015)	0.000	0.000	0.000	0.000	0.000	(0.015)
Total Cost in Bus. Plan	0.000	(0.639)	(0.225)	0.000	0.000	0.000	0.000	(0.864)

T-Line

Project Costs Per Business Plan

		Current Planning Horizon ($M)						
$M	Prior Yrs (Actual)	Yr. 1 2018/19	Yr. 2 2019/20	Yr. 3 2020/21	Yr. 4 2021/22	Yr. 5 2022/23	Yr. 6 + 2023/24	Total
CapEx	0.000	0.000	0.000	0.000	0.000	0.000	0.000	0.000
OpEx	0.000	0.000	0.000	0.000	0.000	0.000	0.000	0.000
Removal	0.000	0.000	0.000	0.000	0.000	0.000	0.000	0.000
Total Cost in Bus. Plan	0.000	0.000	0.000	0.000	0.000	0.000	0.000	0.000

Variance (Business Plan-Project Estimate)

		Current Planning Horizon ($M)						
$M	Prior Yrs (Actual)	Yr. 1 2018/19	Yr. 2 2019/20	Yr. 3 2020/21	Yr. 4 2021/22	Yr. 5 2022/23	Yr. 6 + 2023/24	Total
CapEx	0.000	(0.050)	0.000	0.000	0.000	0.000	0.000	(0.050)
OpEx	0.000	0.000	0.000	0.000	0.000	0.000	0.000	0.000
Removal	0.000	0.000	0.000	0.000	0.000	0.000	0.000	0.000
Total Cost in Bus. Plan	0.000	(0.050)	0.000	0.000	0.000	0.000	0.000	(0.050)

5 Key Milestones

Milestone	Target Date: (Month/Year)
Partial Sanction	January 2016
Engineering Design Complete - EDC	April 2018
Project Sanction	July 2018
Construction Start	August 2018
Ready for Load/Use	March 2019
Construction Complete - CC	April 2019
Project Closure Sanction	December 2019

6 Climate Change

Contribution to National Grid's 2050 80% emissions reduction target:	◉ Neutral	○ Positive	○ Negative
Impact on adaptability of network for future climate change:	◉ Neutral	○ Positive	○ Negative

7 Statements of Support

7.1.1 Supporters

The supporters listed have aligned their part of the business to support the project.

Department	Individual	Responsibilities
Investment Planning	Glen DiConza	Distribution – New England
Long Term Resource Planning	Marceau, Daniel	Distribution – New England
Resource Planning	Mark Phillips	Distribution Sub – New England
Asset Management / Planning	Ryan Constable	All NE Dist Line/Substation and Sub-T Line Projects
Engineering and Design	Kevin Helmuth	Distribution Line - NE
Project Management	Shaun Vacher / Marc Quesnel	All NE
Electric Project Estimation	John Duffy	New England

7.1.2 Reviewers

The reviewers have provided feedback on the content/language of the paper.

Function	Individual
Finance	Felicia Midkiff
Regulatory	Ed Turieo
Jurisdictional Delegate(s)	Sonny Anand
Procurement	Diego Chevere
Control Centers (CC)	Michael Gallagher

7.1.3 List References

1	Distribution Substation Transformers Strategy 2009
2	Engineering Document, Investment Grade Estimate, W.Cranston #21 – Replace T2 Transformer with New 40 MVA Unit, 1/22/15

REDACTED

8 ***Decisions***

I:

(a) APPROVE this paper and the investment of $3.950M and a tolerance of +/-10%

(b) NOTE that Matthew Place is the Project Manager and has the approved financial delegation.

Signature.....D H. Campbell.....Date..7/17/18.....

David H. Campbell, Vice President ServCo Business Partnering, USSC Chair

9 Other Appendices

N/A

D

Short Form Sanction Paper

nationalgrid

Title:	West Cranston #21 No. 2 Transformer Replacement	**Sanction Paper #:**	USSC – 15 - 290
Project #:	C055844	**Sanction Type:**	Partial Sanction
Operating Company:	The Narragansett Electric Co.	**Date of Request:**	January 5, 2016
Author:	Eileen Duarte	**Sponsor:**	John E. Gavin, Vice President Electric Asset Management
Utility Service:	Electricity T&D	**Project Manager:**	Kathleen Hurley

1 Executive Summary

1.1 Sanctioning Summary

This paper requests the partial sanction of C055844 in the amount of $1.630M with a tolerance of +/- 10% for the purposes of Preliminary Engineering, Final Engineering, long lead materials and minor construction activities.

This sanction amount is $1.630M broken down into:

$1.620M Capex
$0.000M Opex
$0.010M Removal

NOTE the potential investment of $3.093M with a tolerance of +200/-50%, contingent upon submittal and approval of a Project Sanction paper following completion of preliminary engineering, final engineering, long lead materials and light construction activities.

1.2 Project Summary

This project will replace the No. 2 transformer, [redacted] at West Cranston #21 substation located at 100 Laten Knight Road in Cranston, RI due to asset condition. In addition, the transformer will be upgraded to a 40 MVA unit in order to mitigate the need to shed load for loss of the No. 1 transformer or supply line at this station and will provide capacity for future station expansion to accommodate load growth in the area.

2 Project Detail

2.1 Background

The No. 2, 3-phase transformer with load tap changer (LTC) at West Cranston #21 Substation has been identified for replacement due to condition issues. The transformer is [redacted] manufactured by Allis Chalmers in 10/1/1970 making it 44 years of age.

The barrier board between the transformer main tank and the LTC compartment has deteriorated allowing the insulating oil to leak either into the main tank or the LTC compartment. The normal functionality of the transformer is to have separate and exclusive insulating oil compartments for the main tank and the LTC compartments. The various connections per phase (approximately 60) have loosened over time and gaskets have deteriorated. The main tank insulating oil leaks into the LTC compartment causing overfill and the need to drain the LTC often. The LTC compartment required draining 3 times within a 5 month span. Additionally, the on-line LTC Dissolved Gas Analysis is inconclusive because the main tank is generating Ethylene gas and therefore provides an inaccurate analysis of the condition of the LTC. Furthermore, the main tank oil level is low requiring the need to add oil to the main tank. As a result of this situation and other factors such as the transformer vintage, high-side aluminum (rather than copper) windings, and the projected loading in the area, the decision was made to replace this transformer with a 40 MVA unit.

The current and projected transformer loads at this station are as follows:

		Rating (MVA)		Actual Load		Projected Load							
				2015		2016		2020		2025		2030	
Substation	Tranf. ID.	SN	SE	MVA	% SN	MVA	% SN	MVA	% SN	MVA	% SN	MVA	% SN
West Cranston #21	T1	27.78	29.91	9.5	34%	11.0	40%	11.1	40%	11.4	41%	11.9	43%
West Cranston #21	T2	27.76	29.86	16.8	60%	19.3	70%	19.5	70%	20.1	72%	20.9	75%
Total West Cranston Station Load				**26.3**		**30.4**		**30.6**		**31.5**		**32.8**	

The transformers have a summer emergency rating of 29.9 MVA and under a contingency situation the transformers would be overloaded.

Additionally, the West Cranston substation was designed and permitted for a six-feeder station. It currently consists of three 12.47kV feeders with the ability to add three more in the future. Past consideration to add feeders at this station were determined not economical due to the need to upgrade the station transformers. The station peak load is approximately 30.4 MW and the 20 MVA transformers limit the loading at the station. Therefore, any future expansion will require replacing the 20 MVA units with larger 40

MVA units. In addition, 40 MVA transformers are standard for stations with six feeders to eliminate customer exposure to extended outages due to the loss of one transformer or supply line. This will also assist with future expansion in the area.

2.2 Drivers

Asset condition is the primary driver for this project. The transformer LTC compartment has failed and needs to be addressed. The secondary driver is system capacity. For loss of a transformer or supply line loading on the station exceeds the emergency rating of the transformers. Installing a 40MVA transformer at this location mitigates this risk. There is not a non-wires alternative association because it is an asset condition project.

2.3 Project Description

The project will replace the No. 2 LTC transformer [redacted] with a larger capacity LTC transformer [redacted] The two 15 kV GE Type PVDB1 circuit breakers equipment position 21F4 and 3-4 will be replaced. The project will include foundation and structural changes. In addition, the existing electro-mechanical transformer protection for both transformers will be upgraded to processor-based. New alarms points will be added to the existing Remote Terminal Unit (RTU) via fiber-optic cable for remote status, control and monitoring of the switching devices and transformers.

2.4 Benefits

Replacement of the transformer with an upgraded unit will eliminate the failed LTC compartment, allow for accurate asset condition monitoring and will reduce maintenance activities. In addition, the increased capacity will assist with the projected load growth in the area, and will improve the contingency deficit. In summary, this project will assist with providing reliable service to our customers in this area.

2.5 Business & Customer Issues

None

2.6 Alternatives

Alternative 1: Deferment

Deferment is not recommended as the transformer LTC compartment has failed and continued maintenance will become costly. The present condition masks our ability to monitor the condition of this transformer, and due to its vintage and design has a higher probability of failure.

Alternative 2: Replace with the same capacity

Replacing the transformer with the same capacity is not recommended due to the load growth in the area and the contingency deficit.

2.7 Investment Recovery

2.7.1 Customer Impact

This project results in an indicative first full year revenue requirement when the asset is placed in service equal to approximately $0.610M. This is indicative only. The actual revenue requirement will differ, depending upon the timing of the next rate case and/or the timing of the next filing in which the project is included in rate base.

3 Related Projects, Scoring, Budgets

3.1 Summary of Projects

Project Number	Project Type (Elec only)	Project Title	Estimate Amount ($M)
C055844	D-Sub	West Cranston Transformer Replacement	$3.093
		Total	**$3.093**

3.2 Associated Projects

None

3.3 Prior Sanctioning History

None

3.4 Category

Category	Reference to Mandate, Policy, NPV, or Other
○ Mandatory	
◉ Policy- Driven	Distribution Substation Transformers, 2009
○ Justified NPV	
○ Other	

3.5 Asset Management Risk Score

Asset Management Risk Score: __39___

Primary Risk Score Driver: (Policy Driven Projects Only)

◉ Reliability ○ Environment ○ Health & Safety ○ Not Policy Driven

3.6 Complexity Level

○ High Complexity ◉ Medium Complexity ○ Low Complexity ○ N/A

Complexity Score: __20___

3.7 Next Planned Sanction Review

Date (Month/Year)	Purpose of Sanction Review
2/2018	Project Sanction

4 Financial

4.1 Business Plan

Business Plan Name & Period	Project included in approved Business Plan?	Over / Under Business Plan	Project Cost relative to approved Business Plan ($)
RI Distribution FY16 – FY20	⊙ Yes ○ No	⊙ Over ○ Under ○ NA	$0.973

4.1.1 If cost > approved Business Plan how will this be funded?

Re-allocation of funds within the portfolio will be managed by Resource Planning to meet jurisdictional budgetary, statutory and regulatory requirements.

4.2 CIAC / Reimbursement

N/A

4.3 Cost Summary Table

Estimate Level	$M	Current Planning Horizon							
		Prior Yrs	Yr. 1 2015/16	Yr. 2 2016/17	Yr. 3 2017/18	Yr. 4 2018/19	Yr. 5 2019/20	Yr. 6 + 2020/21	Total
+200/-50%	Capex	$0.000	$0.000	$0.319	$1.240	$1.498	$0.000	$0.000	$3.057
	Opex	$0.000	$0.000	$0.000	$0.000	$0.000	$0.000	$0.000	$0.000
	Removal	$0.000	$0.000	$0.000	$0.010	$0.026	$0.000	$0.000	$0.036
	Total	$0.000	$0.000	$0.319	$1.250	$1.524	$0.000	$0.000	$3.093

4.4 Project Budget Summary Table

Project Costs Per Business Plan

Project Budget Summary Table			Yr. 1	Yr. 2	Yr. 3	Yr. 4	Yr. 5	Yr. 6 +	
Project Costs per Business Plan		Prior Yrs	2015/16	2016/17	2017/18	2018/19	2019/20	2020/21	Total
	Capex	$0.000	$0.320	$1.000	$0.720	$0.000	$0.000	$0.000	$2.040
	Opex	$0.000	$0.006	$0.020	$0.014	$0.000	$0.000	$0.000	$0.040
	Removal	$0.000	$0.006	$0.020	$0.014	$0.000	$0.000	$0.000	$0.040
	Total Cost in B Plan	$0.000	$0.332	$1.040	$0.748	$0.000	$0.000	$0.000	$2.120

Variance (Business Plan-Project Estimate)

* P/Y Actuals			Yr. 1	Yr. 2	Yr. 3	Yr. 4	Yr. 5	Yr. 6 +	
Variance (Business Plan-Project		Prior Yrs	2015/16	2016/17	2017/18	2018/19	2019/20	2020/21	Total
	Capex	$0.000	$0.320	$0.681	($0.520)	($1.498)	$0.000	$0.000	($1.017)
	Opex	$0.000	$0.006	$0.020	$0.014	$0.000	$0.000	$0.000	$0.040
	Removal	$0.000	$0.006	$0.020	$0.004	($0.026)	$0.000	$0.000	$0.004
	Total Variance	$0.000	$0.332	$0.721	($0.502)	($1.524)	$0.000	$0.000	($0.973)

5 Key Milestones

Milestone	Target Date: (Month/Year)
Partial Sanction	01/16
Project Kick-off	04/16
Preliminary Engineering Complete	01/17
Procurement of Materials/Contractor Begin	03/17
Final Engineering Complete	01/18
Project Sanction	02/18
Construction Start	05/18
Construction Complete	11/18
Project Closeout	02/19

6 Statements of Support

6.1.1 Supporters

The supporters listed have aligned their part of the business to support the project.

Role	Name	Responsibilities
Investment Planner	Glen Diconza	Endorses relative to 5-year business plan or emergent work
Resource Planning D-Sub	Mark Phillips	Endorses resources, cost, schedule
Project Management	Robert Schneller	Endorses resources, cost, schedule
Distribution Planning	Alan Labarre	Endorses scope, design, design standard
Engineering and Design	Susan Martuscello	Endorses scope, design, design standard
Engineering and Design	Leonard Swanson	Endorses scope, design, design standard

6.1.2 Reviewers

The reviewers have provided feedback on the content/language of the paper.

Reviewer List	Name
Finance	Keith Fowler
Regulatory	Peter Zschokke
Jurisdictional Delegates	James Patterson
Procurement	Art Curran
Control Centers	Michael Gallagher

6.1.3 List References

1	Distribution Substation Transformers Strategy 2009
2	Engineering Document, Investment Grade Estimate, W. Cranston #21 – Replace T2 Transformer with New 40 MVA Unit, 1/22/15

7 Decisions

I:

(a) APPROVE the investment of $1.630M and a tolerance of +/- 10% for preliminary engineering, final engineering, long lead materials, and light construction activities.

(b) NOTE the potential investment of $3.093M and a tolerance of +200/-50%, contingent upon submittal and approval of a Project Sanction paper following completion of final engineering and design.

(c) NOTE that Kathleen Hurley is the Project Manager and has the approved financial delegation to undertake the activities stated in (a).

Signature.....Date..1/7/16.....

Executive Sponsor – Marie Jordan, Senior Vice President, Electric Process & Engineering

8 *Other Appendices*

8.1 One-line Diagrams

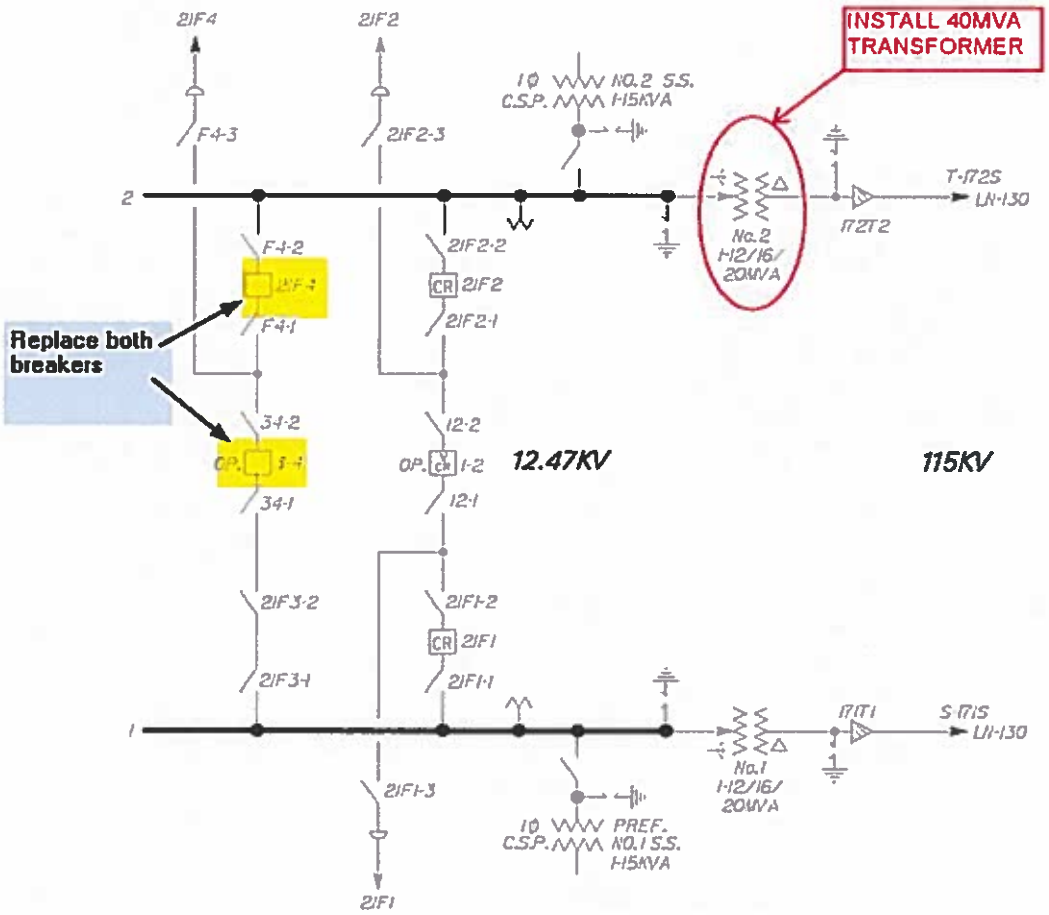

11-01-08

WEST CRANSTON NO. 21 OS5386

OCEAN STATE DIVISION

REDACTED

8.2 Sanction Request Breakdown by Project

N/A

This document has been reviewed for Critical Energy Infrastructure Information (CEII). 2/23/2017
REDACTED

Title:	East Providence Substation	**Sanction Paper #:**	USSC-16-175
Project #:	C049819, C049820, C046726, C046727	**Sanction Type:**	Partial Sanction
Operating Company:	The Narragansett Electric Co.	**Date of Request:**	02/08/2017
Author:	Jack P. Vaz	**Sponsor:**	Carol Sedewitz, VP, Electric Asset Management
Utility Service:	Electricity T&D	**Project Manager:**	Richard Boyle

1 Executive Summary

1.1 Sanctioning Summary

This paper requests partial sanction in the amount $5.800M with a tolerance of +/- 10% for the purposes of performing all engineering activities, permitting, procurement of long lead materials, and to initiate construction activities.

This sanction amount is $5.800M broken down into:

$4.920M Capex
$0.350M Opex
$0.530M Removal

NOTE the potential investment of $17.200M with a tolerance of +200%/-50%, contingent upon submittal and approval of a Project Sanction paper following completion of final engineering and design.

1.2 Project Summary

This project resulted from a comprehensive study of the East Bay area in Rhode Island performed to identify existing and potential future distribution system performance concerns through 2030. The recommendations in that study provide a comprehensive solution to address all the system performance concerns in the East Bay area. This project consists of the following components:

Build a [redacted] substation in East Providence on a company owned parcel next to the [redacted] right of way. Construction will consist of a single 40MVA LTC transformer, straight-bus metal-clad switchgear, a 7.2 MVAR station capacitor bank, and four feeder positions. The station will be supplied by a short tap from the E-183W transmission line. This new station provides capacity to relieve heavily loaded distribution feeders; addresses MWh violations; and provides capacity to supply load growth. This new station is part of a comprehensive plan that eliminates the need for major upgrades on the 23kV sub-transmission system and eliminates the need to build a [redacted] station at Mink St.

1.3 Summary of Projects

Project Number	Project Type	Project Title	Estimate Amount ($M)
C049819	T-Line	East Providence Sub (T-Line)	$0.400
C049820	T-Sub	East Providence Sub (T-Sub)	$0.800
C046726	D-Sub	East Providence Sub (D-Sub)	$6.700
C046727	D-Line	East Providence Sub (D-Line)	$9.300
Total			**$17.200**

1.4 Associated Projects

Project Number	Project Type	Project Title	Estimate Amount ($M)
C065806	D-Sub	Mink Street 23kV Retirement	$0.270
C065166	D-Sub	Warren Sub Expansion (D-Sub)	$4.000
C065187	D-Line	Warren Sub Expansion (D-Line)	$4.700
C065293	D-Sub	Barrington Sub Retirement	$0.370
C065295	D-Sub	Kent Corners Retirement	$0.370
C065297	D-Sub	Waterman Ave Retirement	$0.370
Total			**$10.080**

The retirement projects shown above are dependent on the completion of East Providence Substation and Warren Substation Expansion projects. Both the East Providence Substation and the Warren Substation Expansion projects are interdependent and must be completed concurrently with each other and closely coordinated.

1.5 Prior Sanctioning History

None

1.6 Next Planned Sanction Review

Date (Month/Year)	Purpose of Sanction Review
Dec - 2019	Project Sanction

1.7 Category

Category	Reference to Mandate, Policy, or NPV Assumptions
○ Mandatory ◉ Policy- Driven ○ Justified NPV	Distribution Planning Criteria Strategy, February 2011

1.8 Asset Management Risk Score

Asset Management Risk Score: **41**

Primary Risk Score Driver: (Policy Driven Projects Only)

◉ Reliability ○ Environment ○ Health & Safety ○ Not Policy Driven

1.9 Complexity Level

◉ High Complexity ○ Medium Complexity ○ Low Complexity ○ N/A

Complexity Score: **31**

1.10 Process Hazard Assessment

A Process Hazard Assessment (PHA) is required for this project:

◉ Yes ○ No

1.11 Business Plan

Business Plan Name & Period	Project included in approved Business Plan?	Over / Under Business Plan	Project Cost relative to approved Business Plan ($)
FY17-21 NE Distribution Budget	◉ Yes ○ No	○ Over ◉ Under ○ NA	$4.194M
FY17-21 NE Transmission Budget	◉ Yes ○ No	◉ Over ○ Under ○ NA	$0.294M

NOTE: The distribution costs associated with the East Providence Substation along with the distribution costs of the associated projects are included in the business plan under funding projects C046726 and C046727.

1.12 If cost > approved Business Plan how will this be funded?

Re-allocation of funds within the portfolio has been managed by Resource Planning to meet jurisdictional budgetary, statutory and regulatory requirements.

1.13 Current Planning Horizon

Distribution:

	Current Planning Horizon ($M)						
	FY18	FY19	FY20	FY21	FY22	FY23+	
Spend	2017/18	2018/19	2019/20	2020/21	2021/22	2022/23	Total
CapEx	0.000	0.800	2.680	4.020	5.900	0.000	13.400
OpEx	0.000	0.060	0.200	0.300	0.440	0.000	1.000
Removal	0.000	0.110	0.320	0.480	0.690	0.000	1.600
Total	0.000	0.970	3.200	4.800	7.030	0.000	16.000

Transmission:

	Current Planning Horizon ($M)						
	FY18	FY19	FY20	FY21	FY22	FY23+	
Spend	2017/18	2018/19	2019/20	2020/21	2021/22	2022/23	Total
CapEx	0.000	0.060	0.240	0.360	0.540	0.000	1.200
OpEx	0.000	0.000	0.000	0.000	0.000	0.000	0.000
Removal	0.000	0.000	0.000	0.000	0.000	0.000	0.000
Total	0.000	0.060	0.240	0.360	0.540	0.000	1.200

1.14 Key Milestones

	Target Date: (Month/Year)
Planning Sanction Complete	Feb-2017
Start Preliminary Engineering	Apr-2018
Engineering Design Complete	Oct-2019
Project Sanction	Dec-2019
Construction Start	Mar-2020
ISO Facility Ratings	Sep-2021
Ready for Load	Mar-2022
Construction Complete	Apr-2022
Project Closure	Jul-2022

1.15 Resources, Operations and Procurement

Resource Sourcing			
Engineering & Design Resources to be provided	☑ Internal	☑ Contractor	
Construction/Implementation Resources to be provided	☑ Internal	☑ Contractor	
Resource Delivery			
Availability of internal resources to deliver project:	○ Red	○ Amber	◉ Green
Availability of external resources to deliver project:	○ Red	○ Amber	◉ Green

Operational Impact			
Outage impact on network system:	○ Red	○ Amber	◉ Green
Procurement Impact			
Procurement impact on network system:	○ Red	○ Amber	◉ Green

1.16 Key Issues (include mitigation of Red or Amber Resources)

1	Permitting will be required for the proposed East Providence Substation
2	EFSB notification will be required for the transmission tap to the new station
3	Close coordination will be required with the associated projects
4	Site borders residential abutters and will need coordination with these abutters.
5	Site remediation will be required for the substation site in accordance with soil management plan of site. Coordination with Environmental Department (Site Investigation and Remediation Group) will be required.

1.17 Climate Change

Contribution to National Grid's 2050 80% emissions reduction target:	◉ Neutral	○ Positive	○ Negative
Impact on adaptability of network for future climate change:	◉ Neutral	○ Positive	○ Negative

1.18 List References

1	East Bay Area Study Report – Aug 2015
2	Substation Investment Grade Report – May 2015
3	Transmission Line Investment Engineering Report – Mar 2015
4	Transmission Planning Preliminary Assessment Report – May 2016

2 Decisions

The US Sanctioning Committee (USSC) at a meeting held on February 8, 2017:

(a) APPROVED the investment of **$5.800M** and a tolerance of +/- 10 % for the purposes of performing all engineering activities, permitting, procurement of long lead materials, and to initiate construction activities.

(b) NOTED the potential investment **$17.200M** to and a tolerance of +200%/-50 %, contingent upon submittal and approval of a Project Sanction paper following completion of final engineering and design.

(c) NOTED that **Richard Boyle** has the approved financial delegation to undertake the activities stated in (a).

Signature.....Date...2/22/17.....

Christopher Kelly

Senior Vice President – Electric Process and Engineering

3 Sanction Paper Detail

Title:	East Providence Substation	**Sanction Paper #:**	USSC-16-175
Project #:	C049819, C049820, C046726, C046727	**Sanction Type:**	Partial Sanction
Operating Company:	The Narragansett Electric Co.	**Date of Request:**	02/08/2017
Author:	Jack P. Vaz	**Sponsor:**	Carol Sedewitz, VP, Electric Asset Management
Utility Service:	Electricity T&D	**Project Manager:**	Richard Boyle

3.1 Background

This project resulted from a comprehensive study of the East Bay area in Rhode Island that was performed to identify existing and potential future distribution system performance concerns. The recommendations in that study provide a comprehensive solution to address all the system performance concerns existing and anticipated in the East Bay area thru the year 2030.

The study area consists of the City of East Providence and the towns of Barrington, Bristol, and Warren. The area is bounded to the east by the Commonwealth of Massachusetts, to the north by the City of Pawtucket, and to the west and south by the Providence River. The geographic area is shown in Figure 1. The area has 43,000 customers with a peak electrical demand of 178MW.

3.2 Drivers

The study identified several loading, asset condition, and safety concerns through the study horizon period year of 2030. System Capacity and Performance is the primary driver justifying the recommended projects with Asset Condition as a secondary driver. This project is a component of a comprehensive solution to address all the system performance concerns in the East Bay area at least cost.

The electrical distribution system in this area is heavily loaded with limited capacity to supply new load. Excluding out of phase feeders and the small pocket of 4.16kV load, by 2020 approximately 53% of the feeders are projected to be loaded above 90% of Summer Normal (SN) rating. By 2026, 73% of the feeders are projected to be loaded above 90% of SN rating.

An analysis was performed for all feeders in the area and the MWh exposure calculated for each feeder along with any remaining un-served load once all available tie capacity was utilized. Because the feeders are heavily loaded and have geographic limitations

nearly all feeders exceed the MWh exposure recommended in the Distribution Planning Guide.

Mink Street is a low-profile station with two transformers. It is located in Seekonk, MA, but includes a three-winding power transformer with a 23kV tertiary winding supplying East Bay area load. Peak loading on the 23kV winding is limited to 12MVA because capacity is needed to supply the Massachusetts 13.2kV load. This limit results in approximately 14MW of un-served load for loss of the preferred supply to Barrington substation and limits the ability to add load to the 23kV system.

A number of substations in this area have asset condition, safety, and reliability concerns that will be addressed by the projects in this paper. These substations include Barrington substation, Kent Corners substation, and Waterman substation.

Additional details regarding loading, asset condition, and safety issues are included in the East Bay Study report.

3.3 Project Description

Build a [redacted] substation on First Street in East Providence on a company owned parcel adjacent to the [redacted] right of way. Construction will consist of a single 40MVA LTC transformer, straight-bus metal-clad switchgear, a 7.2 MVAR station capacitor bank, and four feeder positions. The station will be supplied from the E-183W [redacted] Tap to Phillipsdale substation. A one line of this proposed station is shown in Figure 2.

The four new feeders will be routed on public roadways in new manhole and ductline infrastructure. Kent Corners 4.16kV load will be converted to the 12.47kV system thru direct conversions and the use of step-down transformers to minimize cost. One industrial customer and one solar generator will be converted from the 23kV sub-transmission system to the 12.47kV distribution system. The area distribution will be reinforced and reconfigured as a result of the new feeders.

3.4 Benefits Summary

This project addresses safety, asset condition, and reliability concerns in the East Bay area and is part of a comprehensive solution for the area. This work benefits all the customers in the East Bay area. Refer to the East Bay Study report for additional details on the benefits of this project.

3.5 Business and Customer Issues

There are no significant business and customer issues beyond what has been described elsewhere.

3.6 Alternatives

Alternatives and their associated cost are documented in the East Bay Study report issued in August 2015. The recommended plan, Plan 1, can generally be described as increased medium voltage capacity sourced from the existing [redacted] system. Plan 1 includes the East Providence Substation, proposed in this sanction document, plus the Warren Substation Expansion project, Phillipsdale Substation Expansion project and minor station retirement projects.

Alternatives 2 and 3 to the recommended plan would increase medium voltage capacity through expansion and rebuild of the 23kV system. Alternative 2 includes a more substantial Phillipsdale and Warren Substation Rebuild project, a Kent Corners Substation project, a Rumford Substation project, a Mink Street Substation project, approximately 7.5 miles of 23 kV sub-transmission line rebuild, and minor station retirement projects. Alternative 3 combines parts of the first two plans to determine if an economic hybrid solution could be created.

Plan 1, including the scope represented in this sanction document, was selected as the least cost and technically superior plan.

3.7 Safety, Environmental and Project Planning Issues

Safety, environmental, and project planning issues are described in Section 6 of the East Bay Study report.

A detailed cutover plan will be developed for the interconnection of the existing and newly installed feeders. This plan will be developed during the final engineering and design phase.

3.8 Execution Risk Appraisal

Number	Detailed Description of Risk / Opportunity	Probability	Impact		Score		Strategy	Pre-Trigger Mitigation Plan	Residual Risk	Post Trigger Mitigation Plan
			Cost	Schedule	Cost	Schedule				
1	Obtaining the required scheduled outage	1	1	1	[redacted]		Accept	Develop plan and increase communication as scheduled outage approaches.	Construction delays may result from outage postponement.	Continue frequent communication until outage work is concluded.
2	Obtaining the proper distribution line easement rights or ability to enact existing rights.	2	2	2			Mitigate	Identify individual to address potential property issues immediately after Distribution Line design is completed.	Unable to acquire proper easements.	Circle back to design to determine potential alternate routes.
3	Material/equipment damaged during substation construction extending schedule	1	2	2			Mitigate	Require contractor to provide site security and be responsible for potential damage.	Vandalism occurs.	Enhance security measures and expedite replacement of materials and/or equipment.

Note: The proposed substation site will require remediation in accordance with the soil management plan of site. Coordination with Environmental Department (Site

Investigation and Remediation Group) will be required. The site may also require a subsurface investigation which may involve a ground penetrating radar survey.

3.9 Permitting

Permit Name	Probability Required	Duration To Acquire Permit	Status	Estimated Completion Date
EFSB Notice of Intent	Certain	4 Months	Not Applied For	TBD
Building Permit	Certain	3 Months	Not Applied For	TBD
Historic Commission Review	Certain	TBD	Not Applied For	TBD
Street Opening Permits	Certain	3 Months	Not Applied For	TBD

NOTE: Additional permitting details are described in section 6 of the East Bay Study report.

3.10 Investment Recovery

3.10.1 Investment Recovery and Regulatory Implications

Based on current schedule the substation will enter service in FY23 and the distribution projects will be included in each fiscal year's Annual ISR Filing until that time.

3.10.2 Customer Impact

Distribution: This project results in an indicative first full year revenue requirement when the asset is placed in service equal to approximately $2.330M. This is indicative only. The actual revenue requirement will differ, depending upon the timing of the next rate case and/or the timing of the next filing in which the project is included in rate base.

Transmission: This project results in an indicative first full year revenue requirement when the asset is placed in service equal to approximately $0.223M. This is indicative only. Recovery is through Local Network Service (LNS) rates depending on the location of the asset.

3.10.3 CIAC / Reimbursement

Not Applicable.

3.11 Financial Impact to National Grid

3.11.1 Cost Summary Table

Distribution:

Project Number	Project Title	Project Estimate Level (%)	Spend ($M)	Current Planning Horizon FY18 2017/18	FY19 2018/19	FY20 2019/20	FY21 2020/21	FY22 2021/22	FY23+ 2022/23	Total
C046726	East Providence Sub (S-Sub)	+200/-50%	CapEx	0.000	0.360	1.200	1.800	2.640	0.000	6.000
			OpEx	0.000	0.040	0.120	0.180	0.260	0.000	0.600
			Removal	0.000	0.010	0.020	0.030	0.040	0.000	0.100
			Total	0.000	0.410	1.340	2.010	2.940	0.000	6.700
C046727	East Providence Sub (D-Line)	+200/-50%	CapEx	0.000	0.440	1.480	2.220	3.260	0.000	7.400
			OpEx	0.000	0.020	0.080	0.120	0.180	0.000	0.400
			Removal	0.000	0.100	0.300	0.450	0.650	0.000	1.500
			Total	0.000	0.560	1.860	2.790	4.090	0.000	9.300
Total Project Sanction			CapEx	0.000	0.800	2.680	4.020	5.900	0.000	13.400
			OpEx	0.000	0.060	0.200	0.300	0.440	0.000	1.000
			Removal	0.000	0.110	0.320	0.480	0.690	0.000	1.600
			Total	0.000	0.970	3.200	4.800	7.030	0.000	16.000

Transmission:

Project Number	Project Title	Project Estimate Level (%)	Spend ($M)	Current Planning Horizon FY18 2017/18	FY19 2018/19	FY20 2019/20	FY21 2020/21	FY22 2021/22	FY23+ 2022/23	Total
C049819	East Providence Sub (T-Line)	+200/-50%	CapEx	0.000	0.020	0.080	0.120	0.180	0.000	0.400
			OpEx	0.000	0.000	0.000	0.000	0.000	0.000	0.000
			Removal	0.000	0.000	0.000	0.000	0.000	0.000	0.000
			Total	0.000	0.020	0.080	0.120	0.180	0.000	0.400
C049820	East Providence Sub (T-Sub)	+200/-50%	CapEx	0.000	0.040	0.160	0.240	0.360	0.000	0.800
			OpEx	0.000	0.000	0.000	0.000	0.000	0.000	0.000
			Removal	0.000	0.000	0.000	0.000	0.000	0.000	0.000
			Total	0.000	0.040	0.160	0.240	0.360	0.000	0.800
Total Project Sanction			CapEx	0.000	0.060	0.240	0.360	0.540	0.000	1.200
			OpEx	0.000	0.000	0.000	0.000	0.000	0.000	0.000
			Removal	0.000	0.000	0.000	0.000	0.000	0.000	0.000
			Total	0.000	0.060	0.240	0.360	0.540	0.000	1.200

3.11.2 Project Budget Summary Table

Project Costs Per Business Plan (Distribution)

	Current Planning Horizon						
	FY18	FY19	FY20	FY21	FY22	FY23+	
$M	2017/18	2018/19	2019/20	2020/21	2021/22	2022/23	Total
CapEx	0.200	1.020	2.400	7.860	5.900	0.000	17.380
OpEx	0.013	0.069	0.142	0.552	0.440	0.000	1.216
Removal	0.015	0.081	0.158	0.654	0.690	0.000	1.598
Total Cost in Bus. Plan	0.228	1.170	2.700	9.066	7.030	0.000	20.194

Variance (Business Plan-Project Estimate)

	Current Planning Horizon						
	FY18	FY19	FY20	FY21	FY22	FY23+	
$M	2017/18	2018/19	2019/20	2020/21	2021/22	2022/23	Total
CapEx	0.200	0.220	(0.280)	3.840	0.000	0.000	3.980
OpEx	0.013	0.009	(0.058)	0.252	0.000	0.000	0.216
Removal	0.015	(0.029)	(0.162)	0.174	0.000	0.000	(0.002)
Total Cost in Bus. Plan	0.228	0.200	(0.500)	4.266	0.000	0.000	4.194

Project Costs Per Business Plan (Transmission)

	Current Planning Horizon						
	FY18	FY19	FY20	FY21	FY22	FY23+	
$M	2017/18	2018/19	2019/20	2020/21	2021/22	2022/23	Total
CapEx	0.000	0.040	0.140	0.186	0.540	0.000	0.906
OpEx	0.000	0.000	0.000	0.000	0.000	0.000	0.000
Removal	0.000	0.000	0.000	0.000	0.000	0.000	0.000
Total Cost in Bus. Plan	0.000	0.040	0.140	0.186	0.540	0.000	0.906

Variance (Business Plan-Project Estimate)

	Current Planning Horizon						
	FY18	FY19	FY20	FY21	FY22	FY23+	
$M	2017/18	2018/19	2019/20	2020/21	2021/22	2022/23	Total
CapEx	0.000	(0.020)	(0.100)	(0.174)	0.000	0.000	(0.294)
OpEx	0.000	0.000	0.000	0.000	0.000	0.000	0.000
Removal	0.000	0.000	0.000	0.000	0.000	0.000	0.000
Total Cost in Bus. Plan	0.000	(0.020)	(0.100)	(0.174)	0.000	0.000	(0.294)

3.11.3 Cost Assumptions

Cost estimate accuracy is - 50% to +200%. Project sanction cost estimates (+/- 10%) will be developed after final design is completed.

3.11.4 Net Present Value / Cost Benefit Analysis

Not financially driven.

3.11.4.1 NPV Summary Table

Not Applicable.

3.11.5 Additional Impacts

Not Applicable.

3.12 Statements of Support

3.12.1 Supporters

The supporters listed have aligned their part of the business to support the project.

Role	Individual	Responsibilities
Investment Planning	Glen DiConza	Endorses relative to distribution 5-year business plan or emergent work
Investment Planning	Michelle Park	Endorses relative to transmission 5-year business plan or emergent work
Investment Planning	Laura McLaughlin	Reviewing milestone dates for synchronization with cash flows in order to move projects out of Step 0.
Resource Planning	Anne Wyman	Endorses D-Line resources, cost, estimate, schedule and Portfolio alignment
Resource Planning	Mark Phillips	Endorses substation resources, cost, estimate, schedule and Portfolio alignment
Asset Management / Planning	Brian Hayduk	Endorses scope, estimate, and schedule with the company's goals, strategies, and objectives
Asset Management / Planning	Alan LaBarre	Endorses scope, estimate, and schedule with the company's goals, strategies, and objectives
Engineering / Design	Suzan Martuscello	Endorses substation scope, design, conformance with design standards
Engineering / Design	Lisa Sasur	Endorses transmission line scope, design, conformance with design standards
Engineering / Design	Len Swanson	Endorses substation scope, design, conformance with design standards
Project Management	Andrew Schneller	Endorses Resources, cost estimate, schedule

3.12.2 Reviewers

The reviewers have provided feedback on the content/language of the paper.

Function	Individual
Finance	Patricia Easterly / Richard Helm
Regulatory	Peter Zschokke
Jurisdictional Delegates	Jim Patterson / Terron Hill
Procurement	Art Curran
Control Center	Michael Gallagher

Control Center	Will Houston

4 Appendices

4.1 Sanction Request Breakdown by Project

$M	C049819	C049820	C046726	C046727	Total
CapEx	$0.130	$0.270	$2.020	$2.500	$4.920
OpEx			$0.200	$0.150	$0.350
Removal			$0.030	$0.500	$0.530
Total	$0.130	$0.270	$2.250	$3.150	$5.800

4.2 Other Appendices

FIGURE 1 – GEOGRAPHIC AREA

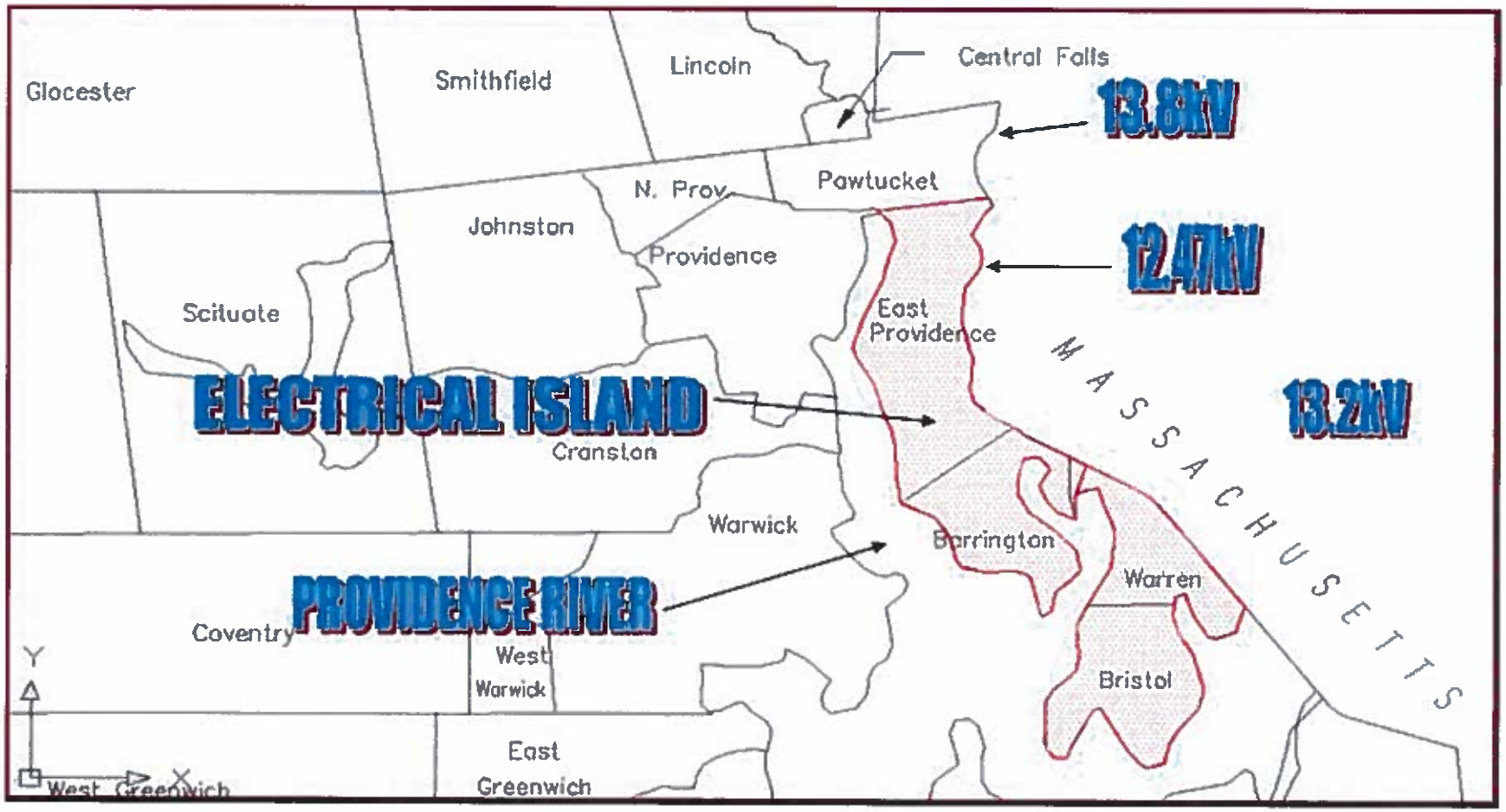

DIV 4-4 Attachment: Page 529 of 656

REDACTED

nationalgrid

FIGURE 2 – EAST PROVIDENCE SUBSTATION ONE LINE-DIAGRAM

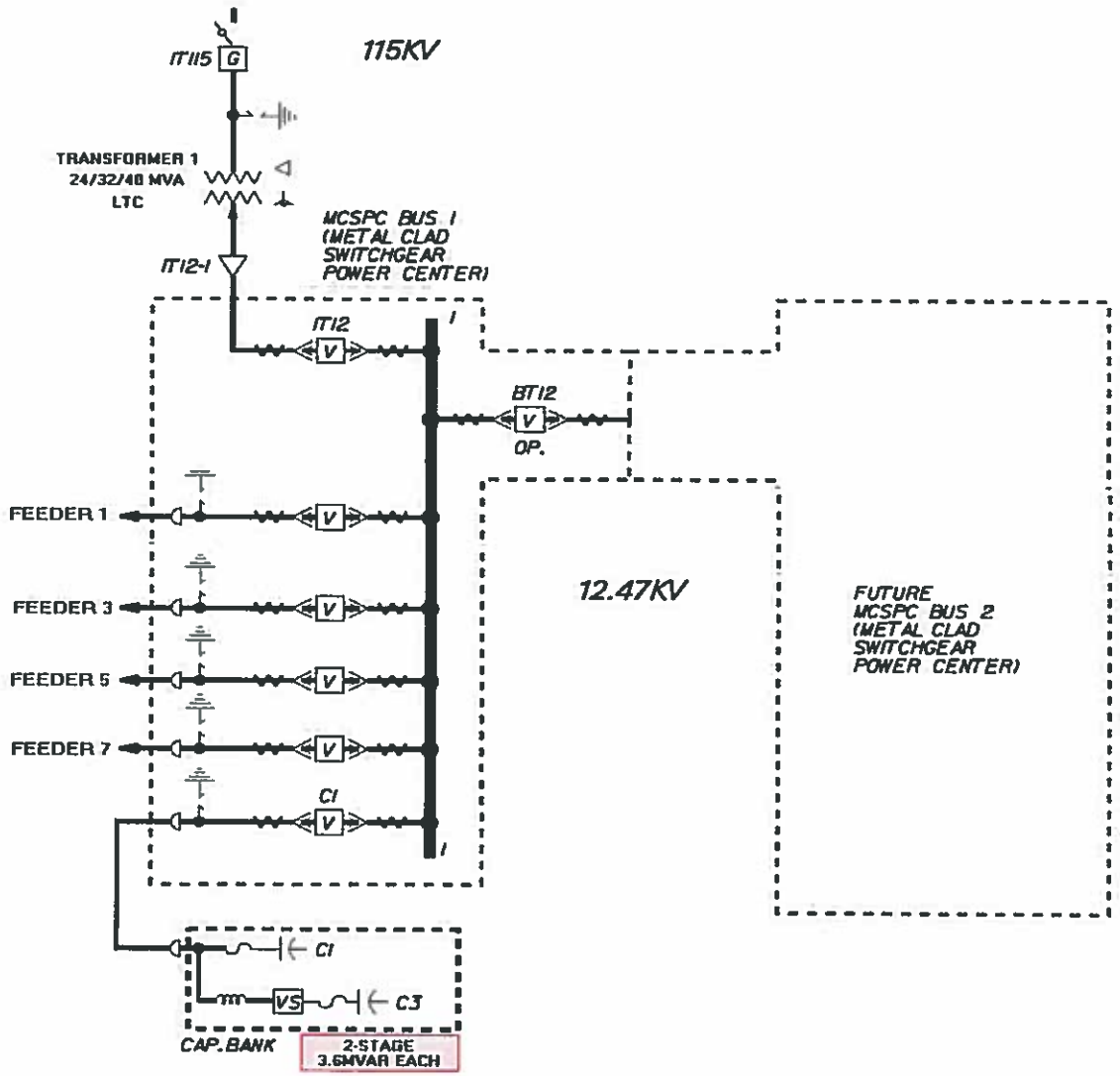

DIV 4-4 Attachment: Page 530 of 656

REDACTED

REDACTED

Title:	Dyer St Indoor Substation	**Sanction Paper #:**	USSC 16-305
Project #:	C051205, C051211	**Sanction Type:**	Partial Sanction
Operating Company:	The Narragansett Electric Co.	**Date of Request:**	02/08/2017
Author:	John Williams	**Sponsor:**	Carol Sedewitz. Vice President, Electric Asset Management
Utility Service:	Electricity T&D	**Project Manager:**	John Skrzypczak

1 Executive Summary

1.1 Sanctioning Summary

This paper requests partial sanction of *projects C051205 and C051211* in the amount $ 6.028 M with a tolerance of +/- 10% for the purposes of final engineering, city permitting and preliminary construction activities that may be required prior to the next planned sanction paper.

This sanction amount is $6.028 M broken down into:

$ 5.558 M Capex
$ 0.207 M Opex
$ 0.263 M Removal

NOTE: a potential investment of $ 14.154 M with a tolerance of +50 /- 25 %, is contingent upon submittal and approval of a Project Sanction paper following completion of permitting, final engineering and design activities. The cost breakdown for each of the associated projects is: C051205 (D-Sub) $12.982 M and C051211 (D-Line) $1.172 M.

1.2 Project Summary

Build a new 11 kV to 4.16 kV indoor distribution substation on National Grid's Dyer St site. Retire the existing Dyer St Indoor Substation. Remove all 11 kV and 4.16 kV equipment and demolish the Indoor building. This work will allow the retirement of a circa 1925 indoor substation. The dated substation presents a challenging work environment for National Grid personal as compared to a contemporary substation.

1.3 Summary of Projects

Project Number	Project Type (Elec only)	Project Title	Estimate Amount ($M)
C051205	D Sub	Dyer St replace indoor substation	12.982
C051211	D line	Dyer St replace indoor Sub D- line	1.172
		Total	14.154

1.4 Associated Projects

Project Number	Project Title	Estimate Amount ($M)
C051213	South St Replc Indoor Subst D-Sub	38,645

1.5 Prior Sanctioning History

None

1.6 Next Planned Sanction Review

Date (Month/Year)	Purpose of Sanction Review
April 2019	Project Sanction

1.7 Category

Category	Reference to Mandate, Policy, NPV, or Other
○ Mandatory	
◉ Policy- Driven	National Grid Indoor Substation Strategy, December 21, 2011.
○ Justified NPV	
○ Other	

1.8 Asset Management Risk Score

Asset Management Risk Score: **45**

Primary Risk Score Driver: (Policy Driven Projects Only)

○ Reliability ○ Environment ◉ Health & Safety ○ Not Policy Driven

1.9 Complexity Level

◉ High Complexity ○ Medium Complexity ○ Low Complexity ○ N/A

Complexity Score: **27**

1.10 Process Hazard Assessment

A Process Hazard Assessment (PHA) is required for this project:

◉ Yes ○ No

1.11 Business Plan

Business Plan Name & Period	Project included in approved Business Plan?	Over / Under Business Plan	Project Cost relative to approved Business Plan ($)
FY17-21 NEv Distribution and Transmission Capital Plan	◉ Yes ○ No	◉ Over ○ Under ○ NA	$ 8.126 M

1.12 If cost > approved Business Plan how will this be funded?

Re-allocation of funds within the portfolio has been managed and approved by Resource Planning to meet jurisdictional budgetary, statutory and regulatory requirements

1.13 Current Planning Horizon

		Current Planning Horizon						
$M	Prior Yrs	Yr. 1 2016/17	Yr. 2 2017/18	Yr. 3 2018/19	Yr. 4 2019/20	Yr. 5 2020/21	Yr. 6+ 2021/22	Total
CapEx	0.000	0.033	0.448	1.122	4.789	5.585	0.000	11.977
OpEx	0.000	0.004	0.031	0.065	0.373	0.433	0.000	0.905
Removal	0.000	0.004	0.050	0.098	0.517	0.603	0.000	1.272
CIAC/Reimbursement	0.000	0.000	0.000	0.000	0.000	0.000	0.000	0.000
Total	0.000	0.041	0.529	1.284	5.679	6.621	0.000	14.154

1.14 Key Milestones

Milestone	Target Date: (Month/Year)
Partial Sanction	February 2017
Start Preliminary Engineering (Kickoff Meeting)	March 2017
Permitting	March 2018
Engineering Design Complete	March 2019
Construction Start	June 2019
Ready for load	November 2020
Construction Complete	December 2020
Project Closure Sanction	February 2021

1.15 Resources, Operations and Procurement

Resource Sourcing			
Engineering & Design Resources to be provided	☑ Internal	☑ Contractor	
Construction/Implementation Resources to be provided	☑ Internal	☑ Contractor	
Resource Delivery			
Availability of internal resources to deliver project:	○ Red	○ Amber	◉ Green
Availability of external resources to deliver project:	○ Red	○ Amber	◉ Green
Operational Impact			
Outage impact on network system:	○ Red	○ Amber	◉ Green
Procurement Impact			
Procurement impact on network system:	○ Red	○ Amber	◉ Green

1.16 Key Issues (include mitigation of Red or Amber Resources)

1	Permitting, The Dyer St Site is in Providence's D-1 Zone. By zoning ordinance, the Downtown Design Review Committee reviews and approves of all exterior building alterations in the zone. This includes open landscapes, roof lines and demolition requests.
2	To rehabilitate the DC building the civil contractor will install a steel shoring system to stabilize load bearing walls, replace the roof, and reconstruct interior to accommodate a modern indoor substation.
3	Environmental costs of demolishing the existing Dyer St Indoor building are dependant on the findings of the pre-characterization assessment which is completed when the environmental engineering contractor is able to access to all de-energized parts of the existing indoor substation.

1.17 Climate Change

Contribution to National Grid's 2050 80% emissions reduction target:	◉ Neutral	○ Positive	○ Negative
Impact on adaptability of network for future climate change:	◉ Neutral	○ Positive	○ Negative

1.18 List References

1	National Grid Substation O&M Services Asset Condition Report – Dyer St Station, March 2011
2	Providence Area Long Term Supply and Distribution Study, May 2014
3	National Grid. Doc PR.02.00.004 Investment Grade Report of Substations. 'Dyer St –Existing Substation Retirement and New Substation Location, April 2016
4	Coneco Engineering 'Site Characterization Activities and remediation abatement and disposal of hazardous materials Cost Estimate, April 2016
5	Odeh Civil Engineers, Dyer St Substation Building - Summary of Construction Options, April 2016

REDACTED

2 *Decisions*

The US Sanctioning Committee (USSC) at a meeting held on February 8, 2017

(a) APPROVED the investment of **$ 6.028 M** and a tolerance of +/- 10 % for design, procurement and final engineering.

(b) NOTED the potential investment **$ 14.154 M** to and a tolerance of +50 /-25 %, contingent upon submittal and approval of a Project Sanction paper following completion of final engineering and design.

(c) NOTED that **John Skrypczak** has the approved financial delegation to undertake the activities stated in (a).

Signature.....Date.....2/14/17

Christopher Kelly
Senior Vice President
Electric Process and Engineering

3 *Sanction Paper Detail*

Title:	Dyer St Indoor Substation Retirement	**Sanction Paper #:**	USSC 16-305
Project #:	C051205 , C051211	**Sanction Type:**	Select
Operating Company:	The Narragansett Electric Co.	**Date of Request:**	02/08/2017
Author:	John Williams	**Sponsor:**	Carol Sedewitz. Vice President, Electric Asset Management
Utility Service:	Electricity T&D	**Project Manager:**	John Skrzypczak

3.1 Background

Dyer St Indoor Substation is located in what is known as the AC building. This four story brick building, constructed in 1925, serves 13 MVA of summer peak load from it's nine 4.16 kV distribution circuits. The station also has an 11 kV bus that supports five supply circuits (three from South St and two from Franklin Square) one distribution circuit (1103), and two Network Circuits (1105 and 1109).

Located abt 50 ft west of the indoor substation is second brick structure known as the DC building. This building was the original structure on the 1.04 acre site that TNECo purchased in 1897 for $100. The building was used to generate DC power to supply street lights and the trolley line. The last DC circuits were retired in the early 1980s. Since then, the building has been used for general storage.

The Providence Area Long Term Supply and Distribution Study, completed in May 2014, recommended the replacement of Dyer St Indoor Substation.

3.2 Drivers

Asset Condition and Safety are the main drivers of this project.

National Grid's Network Asset Planning Group completed an Asset Condition Report on the Dyer St Indoor Station in March of 2011. After reviewing equipment test records, operating history, and applying industry knowledge it was concluded that the existing station presents operational, safety and maintenance challenges as compared to operating a modern indoor substation. Replacement of the indoor substation allows for the retirement of the breakers, reactors, and relay schemes that were identified in the

Asset condition report as deficient in performance and difficult to maintain. Pls see attachments 1 and 2 for an illustration of identified equipment.

In addition, this indoor substation ranked as the highest priority for replacement following the completion of the 2011 indoor substation replacement prioritization exercise performed by Distribution Asset Strategy.

3.3 Project Description

Tasks associated with C051205 'Dyer St Replace indoor subst D-Sub' included:

Rehabilitation of the DC building.

- A new steel framed shoring system will be installed along the interior load bearing walls.
- The exterior brick will be repaired and repointed as needed.
- The building's roof will be replaced.
- Non-load bearing interior walls that make up the south section transformer vaults will be removed.

Installation of a new indoor substation within the DC building

- A new six position 11 kV switchgear will be installed in the south section.
- A new 10 feeder breaker-and-a-half 4.16 kV indoor switchgear will be installed on the mezzanine
- Two 12.5 MVA 11.5 kV – 4.16 kV transformers will relocated from the outside of the Indoor building to the north face of the DC building.

Demolition of the existing Indoor Substation.

- All 11 kV and 4.16kV equipment will be removed from the building.
- All 15 kV and 5 kV electrical cables as will as relay and control wire will be removed.
- The 4 story circa 1925 brick building will be demolished.
- A green space / landscaped area will be created in place of the indoor substation building.

Tasks associated with C051211 'Dyer St Replace indoor subst D-Line':

Cutover of 11kV and 4 kV circuits from the old indoor substation to the new indoor substation.

- Rebuild a new duct line from the cable vault inside the DC building.
- Relocate the three 11 kV supply circuits from South St (1102,1104 and 1106) from the indoor substation to the new 11 kV switchgear.
- Join the 11 kV Franklin Square 1149 circuit with the 1103 Dyer Circuit in the duct line outside Dyer St Substation

Relocate nine 4 kV distribution circuits from the existing Dyer St indoor substation to the new indoor switchgear.

3.4 Benefits Summary

This project will addresses safety and asset condition issues identified in the Dyer St Asset condition report. In addition, the new station will have status and control of the 11 KV and 4 kV breakers at the regional control center [redacted]

The DC build will be rehabilitated, improving an asset the city of Providence deems historically significant.

3.5 Business and Customer Issues

Impact to Business and Customer Issues is expected to be minimal. Preservation of the DC building will be viewed favorably by the city of Providence.

3.6 Alternatives

Alternative 1: Install a new Outdoor Substation at Dyer St. Demolish the existing Indoor Substation.

The cost of this alternative was 10 % less than the recommended option. However this alternative involves knocking down the DC building, which the Providence Planning Board has identified as historically significant. It is extremely unlikely the city would grant the zoning variance required to demolish this structure.

Alternative 2: Install a new Outdoor Substation behind a Façade. Demolish the existing Indoor Substation

This alternative cost 3 % less than the recommended alternative. It involves creating a façade out of two sides of the historically significant DC building. An outdoor substation would then be constructed behind the façade. After initial contact with the Providence Planning Board, permitting for this alternative is also considered improbable. This option will be retained as part of the permitting strategy but has a low probability of success.

3.7 Safety, Environmental and Project Planning Issues

A health and safety plan will be developed to insure employees and contractors understand how to perform work that is compliant with the company's safety regulations.

3.8 Execution Risk Appraisal

Number	Detailed Description of Risk / Opportunity	Probability	Impact		Score		Strategy	Pre-Trigger Mitigation Plan	Residual Risk	Post Trigger Mitigation Plan
			Cost	Schedule	Cost	Schedule				
1	City of Providence Permitting	3	5	1	15	3	Accept	Work [redacted] to insure final design is both cost effective and has a high probability of being approved.	NGrid does not secure variances required to demolish existing indoor substation.	Rehabilitate the existing indoor substation building. Explore alternate uses for the building
2	Coordination of circuit cutover from existing indoor substation to new indoor substation	5	5	4	25	20	Mitigate	Perform detailed inspections of duct and manhole system in and around Dyer St. Choose circuit cutover locations that have the least cost and customer impacts. Determine the most effective cutover circuit sequence.	N/A	Work with designer and local underground department to change cable plan to minimize cost and customer outage time. Adjust schedule and spending forecast.
3	Hazardous Material (Asbestos wiring within substation)	3	2	2	6	6	Accept	Conduct pre- demolition walk through.	N/A	Properly dispose of contaminated materials.
4	Hazardous Material (Asbestos removal)	3	2	2	6	6	Accept	Closely inspect cables, inductors and ancillary electrical equipment when the facility is de-energized.	N/A	Properly dispose of contaminated materials.
5	Adjustment to scope is required due to Planning or Operations needs	2	5	2	10	4	Accept	Engage with planning and local stakeholders to silicate input before final sanction documentation is complete.	N/A	Confirm that engineering / design changes are justified. Adjust schedule and spending forecast.
6	Unknown cabling, underground structures or blocked duct lines	2	1	1	2	2	Mitigate	Mandrel suspect duct line or reroute cable through other duct lines.	N/A	Redesign, adjust schedule, confirm scope changes with the sponsor.
7	Engineering error or commissioning	2	1	1	2	2	Mitigate	Conduct regular progress meeting with engaged stakeholders to identify issues prior to beginning construction.	N/A	Confirm that engineering / design changes are justified. Adjust schedule and spending forecast.
8	Storm Duty / Emergency Response Efforts	2	1	1	2	2	Accept	Early engagement with OPR / Control Center to limit issues of temporary circuit configurations during storm emergencies.	N/A	Adjust schedule

3.9 Permitting

Permit Name	Probability Required (Certain/ Likely/ Unlikely)	Duration To Acquire Permit	Status (Complete/ In Progress Not Applied For)	Estimated Completion Date
Providence Planning Board (DDRC)	Likely	15 moths	In progress	March 2018
State Environmental Permits	Likely	6 Month	Not Applied for	June 2019

3.10 Investment Recovery

3.10.1 Investment Recovery and Regulatory Implications

Investment recovery will be through standard rate recovery mechanisms approved by appropriate regulatory agencies.

3.10.2 Customer Impact

This project results in an indicative first full year revenue requirement when the asset is placed in service equal to approximately $ 2.082 M this is indicative only. The actual revenue requirement will differ, depending upon the timing of the next rate case and / or the timing of the next filing which the project is included in the rate base.

3.10.3 CIAC / Reimbursement

There is no CIAC / reimbursement associated with this project.

3.11 Financial Impact to National Grid

3.11.1 Cost Summary Table

Project Number	Project Title	Project Estimate Level (%)	Spend ($M)	Prior Yrs	Current Planning Horizon Yr. 1 2016/17	Yr. 2 2017/18	Yr. 3 2018/19	Yr. 4 2019/20	Yr. 5 2020/21	Yr. 6 + 2021/22	Total
C051205	Dyer St replace indoor substation	Est Lvl (e.g. +50 / -25%)	CapEx	0.000	0.020	0.210	0.829	4.529	5.254	0.000	10.842
			OpEx	0.000	0.004	0.031	0.065	0.373	0.433	0.000	0.905
			Removal	0.000	0.004	0.042	0.088	0.509	0.592	0.000	1.235
			Total	0.000	0.028	0.283	0.982	5.411	6.279	0.000	12.982
C051211	Dyer St replace indoor Sub D- line	Est Lvl (e.g. +50 / -25%)	CapEx	0.000	0.013	0.238	0.293	0.260	0.331	0.000	1.135
			OpEx	0.000	0.000	0.000	0.000	0.000	0.000	0.000	0.000
			Removal	0.000	0.000	0.008	0.010	0.008	0.011	0.000	0.037
			Total	0.000	0.013	0.246	0.303	0.268	0.342	0.000	1.172
Total Project Sanction			CapEx	0.000	0.033	0.448	1.122	4.789	5.585	0.000	11.977
			OpEx	0.000	0.004	0.031	0.065	0.373	0.433	0.000	0.905
			Removal	0.000	0.004	0.050	0.098	0.517	0.603	0.000	1.272
			Total	0.000	0.041	0.529	1.284	5.679	6.621	0.000	14.154

It is expected that the plant will be capitalized at the ready for load date, unless otherwise specified.

3.11.2 Project Budget Summary Table

Project Costs Per Business Plan

$M	Prior Yrs	Current Planning Horizon Yr. 1 2016/17	Yr. 2 2017/18	Yr. 3 2018/19	Yr. 4 2019/20	Yr. 5 2020/21	Yr. 6 + 2021/22	Total
CapEx	0.000	0.025	0.400	0.620	2.073	2.440	0.000	5.558
OpEx	0.000	0.001	0.028	0.037	0.064	0.077	0.000	0.207
Removal	0.000	0.002	0.032	0.043	0.084	0.102	0.000	0.263
Total Cost in Bus. Plan	0.000	0.028	0.460	0.700	2.221	2.619	0.000	6.028

Variance (Business Plan-Project Estimate)

$M	Prior Yrs	Current Planning Horizon Yr. 1 2016/17	Yr. 2 2017/18	Yr. 3 2018/19	Yr. 4 2019/20	Yr. 5 2020/21	Yr. 6 + 2021/22	Total
CapEx	0.000	(0.008)	(0.048)	(0.502)	(2.716)	(3.145)	0.000	(6.419)
OpEx	0.000	(0.003)	(0.003)	(0.028)	(0.309)	(0.356)	0.000	(0.698)
Removal	0.000	(0.002)	(0.018)	(0.055)	(0.433)	(0.501)	0.000	(1.009)
Total Cost in Bus. Plan	0.000	(0.013)	(0.069)	(0.584)	(3.458)	(4.002)	0.000	(8.126)

3.11.3 Cost Assumptions

Cost estimate accuracy is +50 / - 25 %. Project sanction cost estimates will be developed after final design is completed.

3.11.4 Net Present Value / Cost Benefit Analysis

Not applicable

3.11.4.1 NPV Summary Table

Not applicable

3.11.4.2 NPV Assumptions and Calculations

Not applicable

3.11.5 Additional Impacts

Not applicable

3.12 Statements of Support

Not applicable

3.12.1 Supporters

The supporters listed have aligned their part of the business to support the project.

Department	Individual	Responsibilities
Investment Planning	Glen DiConza	Endorses relative to 5 year business plan or emergent work.
Resource Planning	Anne Wyman	Endorses construction resources, cost estimate. Schedule and portfolio alignment.
Resource Planning	Mark Phillips	Endorses construction resources, cost estimate. Schedule and portfolio alignment.
Asset Management / Planning	Alan Labarre	Endorses scope, estimate, and schedule with the company's goals, strategies and objectives.
Substation Engineering and Design	Suzan Martuscello	Endorses scope, design, conformance with design standards.
Protection Engineering	Leonard Swanson	Endorses scope, design conformance with design standards
Project Management	Andrew Schneller	Endorses resources, cost estimate and schedule.

REDACTED

3.12.2 Reviewers

The reviewers have provided feedback on the content/language of the paper.

Function	Individual
Finance	Patricia Easterly
Regulatory	Peter Zschokke
Jurisdictional Delegate	Jim Patterson
Procurement	Arthur Curran
Control Center	Michael Gallagher

4 Appendices

4.1 Sanction Request Breakdown by Project

$M	C051205	C051211	Total
CapEx	4.361	1.197	5.558
OpEx	0.087	0.098	0.207
Removal	0.131	0.132	0.263
Total	4.579	1.427	6.028

4.2 Other Appendices

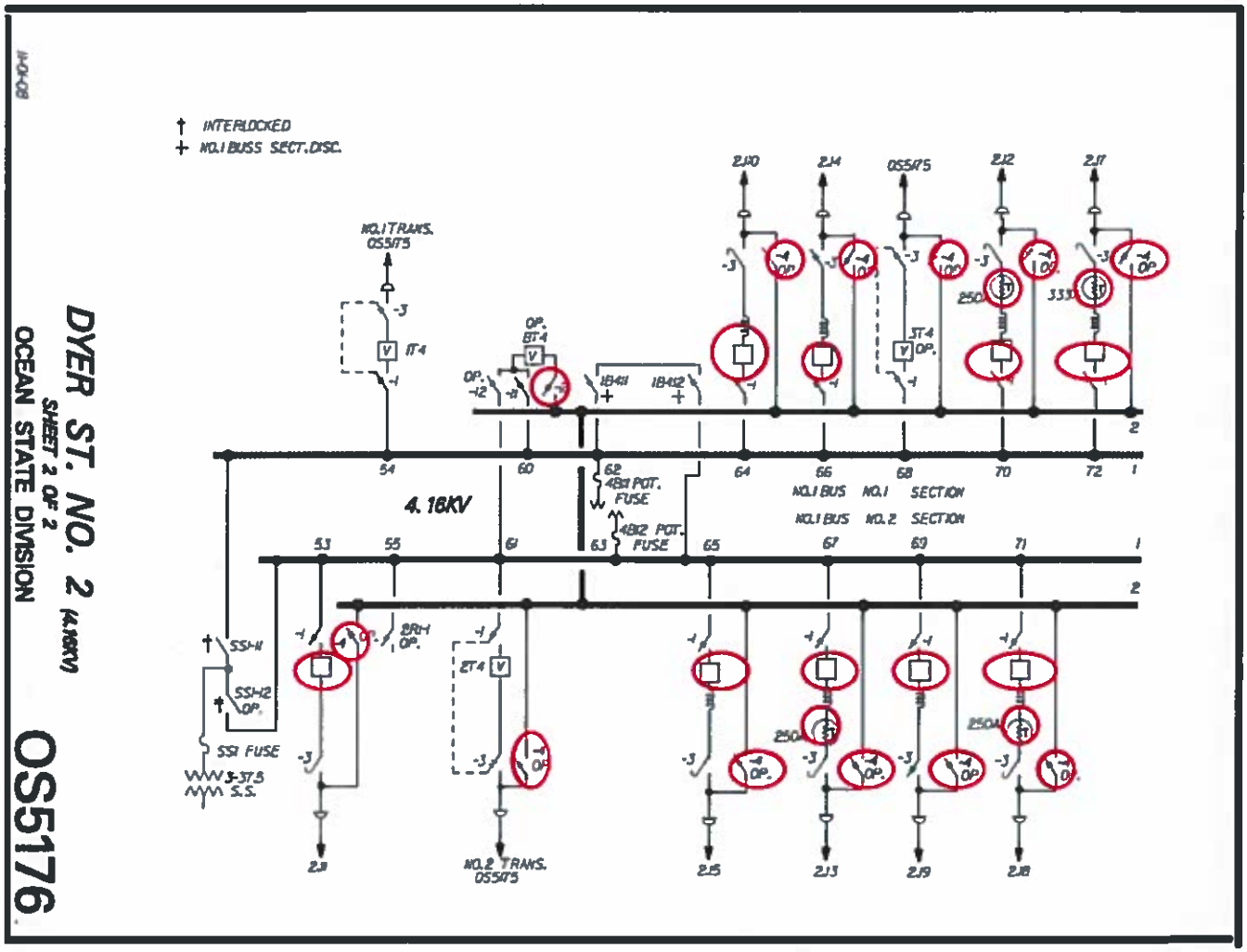

Equipment with red circle was identified for replacement in the O&M Services Asset Condition Report

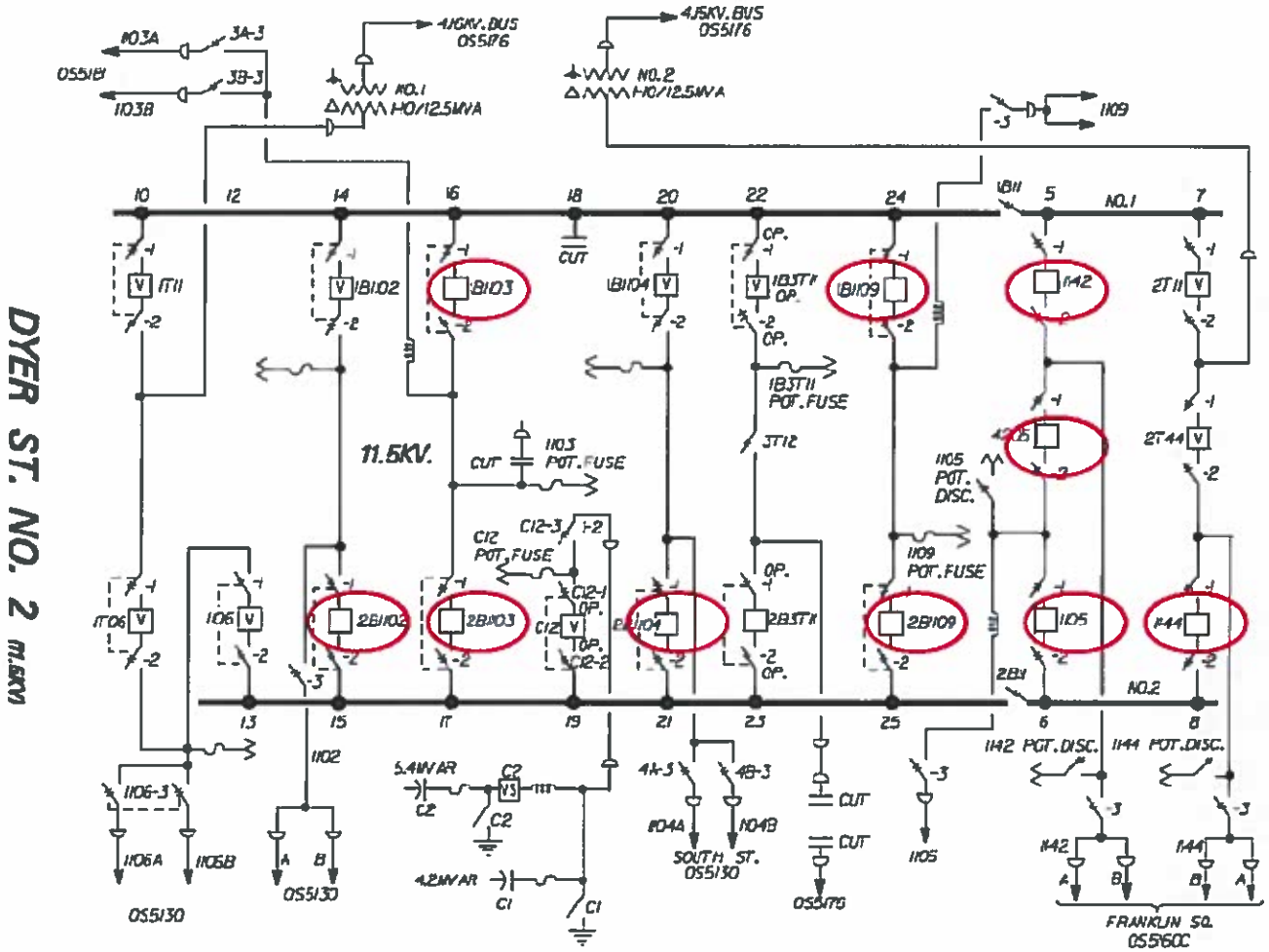

Equipment with red circle was identified for replacement in the O&M Services Asset Condition Report

Close up of H- Breakers that were recommend for replacement in the Asset Condition Report.



One of 7 Breaker Rooms with H-Type Breakers

Dyer St Indoor Substation 1st row of switches off the 4 kV



Room with Gang operated disconnects and 4.16kV bus – Black doors on left wall provide access to each phase energized bus. 1 of 2 such rooms

Dyer St Indoor Substation 2nd row of switches off the 4 kV bus

Substation O&M Services

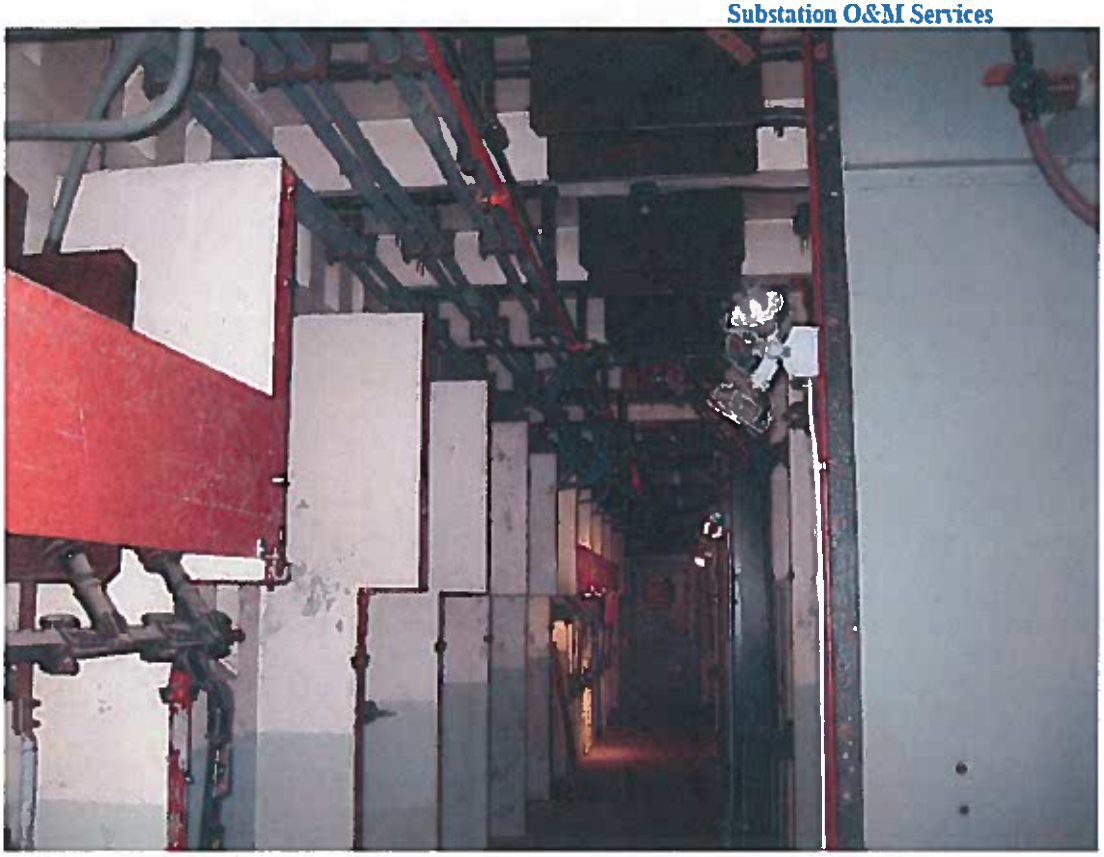

Room with 4.16kV -4 switches (left), -3 disconnects (ceiling)

C051211 Distribution line work. Sample of 4 kV distribution circuit cutover from existing indoor substation to the proposed.

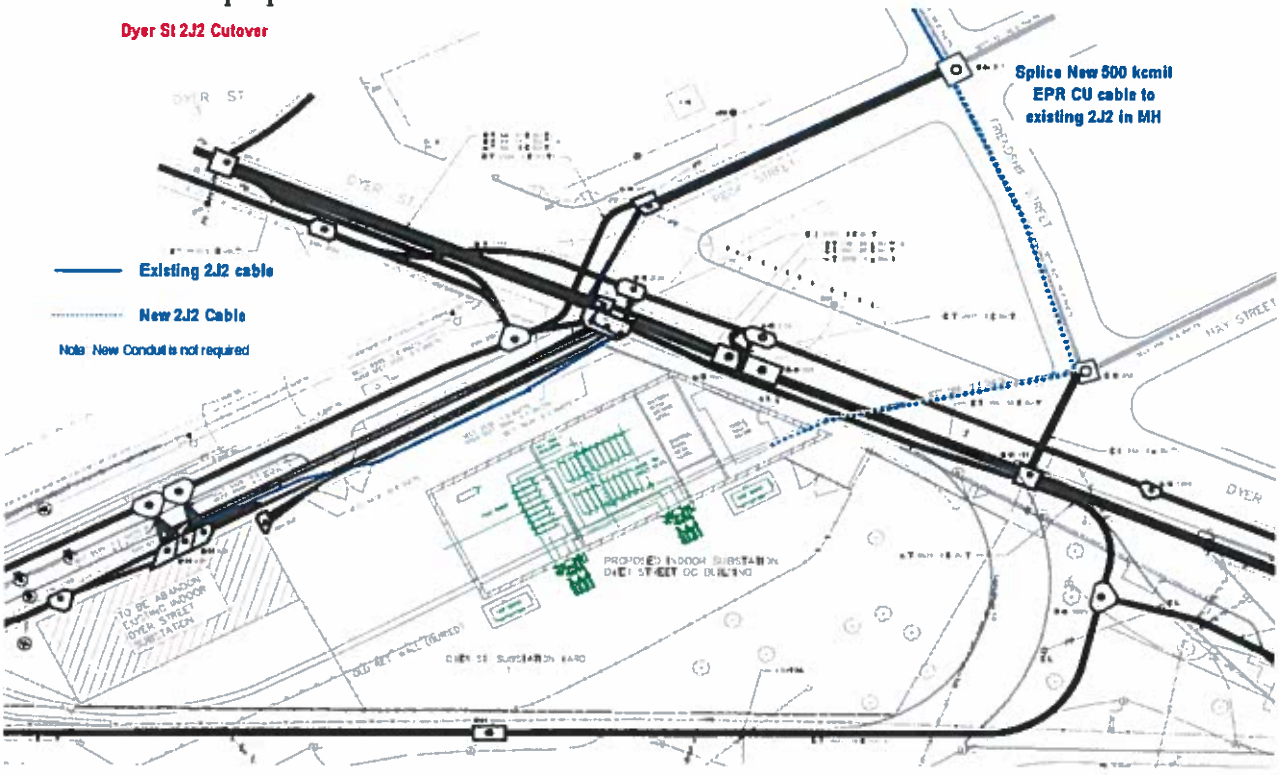

nationalgrid

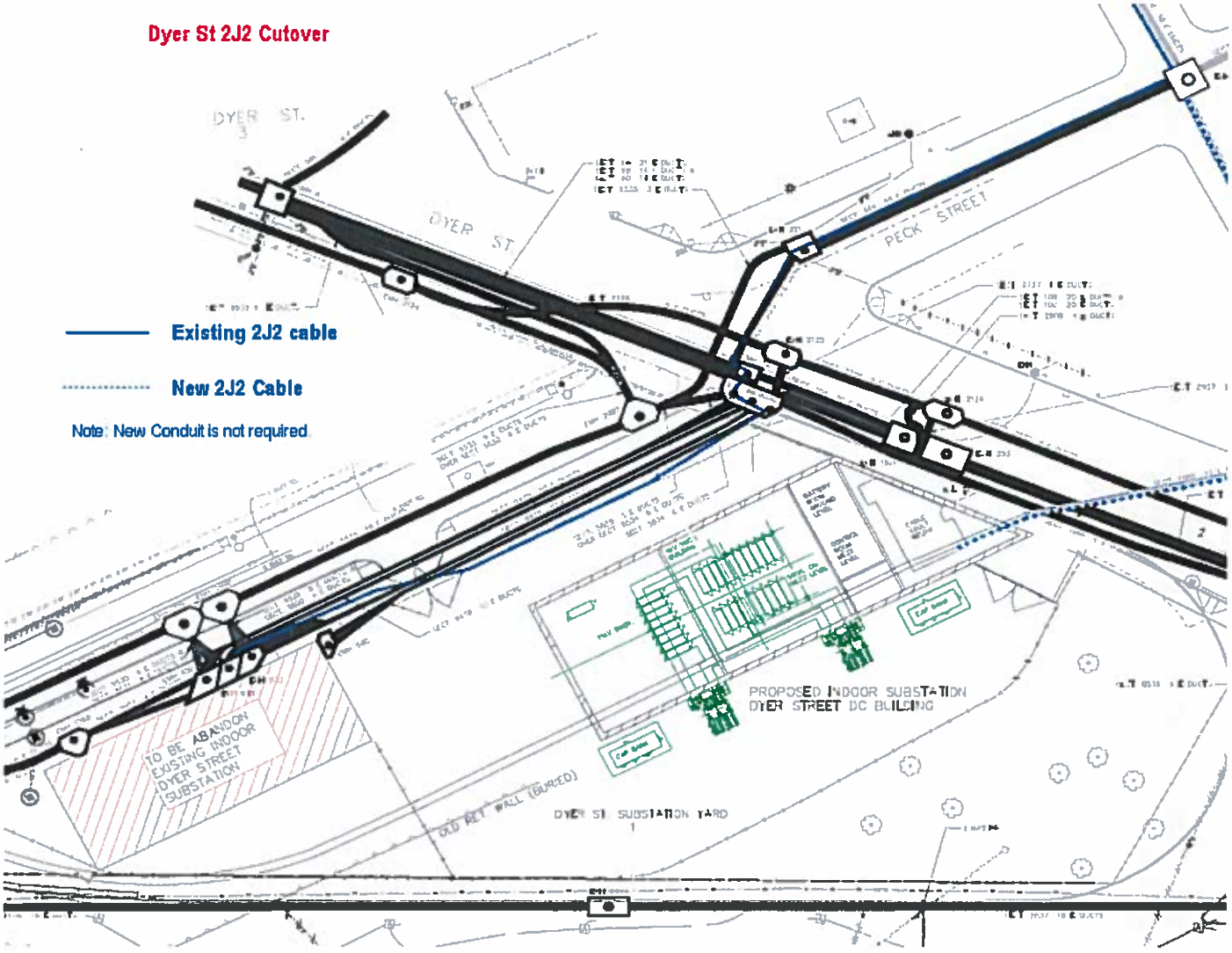

Title:	Warren Substation Expansion	**Sanction Paper #:**	USSC-17-002
Project #:	C065166, C065187	**Sanction Type:**	Partial Sanction
Operating Company:	The Narragansett Electric Co.	**Date of Request:**	02/08/2017
Author:	Jack P. Vaz	**Sponsor:**	Carol Sedewitz, VP, Electric Asset Management
Utility Service:	Electricity T&D	**Project Manager:**	Richard Boyle

1 Executive Summary

1.1 Sanctioning Summary

This paper requests partial sanction in the amount $2.900M with a tolerance of +/- 10% for the purposes of performing all engineering activities, permitting, procurement of long lead materials, and to initiate construction activities.

This sanction amount is $2.900M broken down into:

$2.530M Capex
$0.140M Opex
$0.230M Removal

NOTE the potential investment of $8.700M with a tolerance of +200%/-50%, contingent upon submittal and approval of a Project Sanction paper following completion of final engineering and design.

1.2 Project Summary

This project resulted from a comprehensive study of the East Bay area in Rhode Island performed to identify existing and potential future distribution system performance concerns through 2030. The recommendations in that study provide a comprehensive solution to address all the system performance concerns in the East Bay area. This project consists of the following components:

Expand Warren [redacted] substation by adding two new distribution feeders and two 7.2 MVAR station capacitor banks. The new feeders will be routed into Barrington and be used to retire Barrington substation. This substation expansion addresses asset and safety concerns at Barrington substation and is part of a comprehensive plan that eliminates the need for major upgrades on the 23kV sub-transmission system and eliminates the need to build a [redacted] station at Mink St.

1.3 Summary of Projects

Project Number	Project Type	Project Title	Estimate Amount ($M)
C065166	D-Sub	Warren Sub Expansion (D-Sub)	$4.000
C065187	D-Line	Warren Sub Expansion (D-Line)	$4.700
		Total	**$8.700**

1.4 Associated Projects

Project Number	Project Type	Project Title	Estimate Amount ($M)
C049819	T-Line	East Providence Sub (T-Line)	$0.400
C049820	T-Sub	East Providence Sub (T-Sub)	$0.800
C046726	D-Sub	East Providence Sub (D-Sub)	$6.700
C046727	D-Line	East Providence Sub (D-Line)	$9.300
C065806	D-Sub	Mink Street 23kV Retirement	$0.270
C065293	D-Sub	Barrington Sub Retirement	$0.370
C065295	D-Sub	Kent Corners Retirement	$0.370
C065297	D-Sub	Waterman Ave Retirement	$0.370
Total			**$18.580**

The retirement projects shown above are dependent on the completion of East Providence Substation and Warren Substation Expansion projects. Both the East Providence Substation and the Warren Substation Expansion projects are interdependent and must be completed concurrently with each other and closely coordinated.

1.5 Prior Sanctioning History

None

1.6 Next Planned Sanction Review

Date (Month/Year)	Purpose of Sanction Review
Dec - 2019	Project Sanction

1.7 Category

Category	Reference to Mandate, Policy, or NPV Assumptions
○ Mandatory ◉ Policy- Driven ○ Justified NPV	Distribution Planning Criteria Strategy, February 2011

1.8 Asset Management Risk Score

Asset Management Risk Score: **41**

Primary Risk Score Driver: (Policy Driven Projects Only)

◉ Reliability ○ Environment ○ Health & Safety ○ Not Policy Driven

1.9 Complexity Level

◉ High Complexity ○ Medium Complexity ○ Low Complexity ○ N/A

Complexity Score: **31**

1.10 Process Hazard Assessment

A Process Hazard Assessment (PHA) is required for this project:

◉ Yes ○ No

1.11 Business Plan

Business Plan Name & Period	Project included in approved Business Plan?	Over / Under Business Plan	Project Cost relative to approved Business Plan ($)
FY17-21 NE Distribution Budget	◉ Yes ○ No	◉ Over ○ Under ○ NA	$8.700M

NOTE: The distribution costs associated with the Warren Substation Expansion along with the distribution costs of the associated projects are included in the business plan under funding projects C046726 and C046727.

1.12 If cost > approved Business Plan how will this be funded?

Re-allocation of funds within the portfolio has been managed by Resource Planning to meet jurisdictional budgetary, statutory and regulatory requirements.

1.13 Current Planning Horizon

Distribution:

	Current Planning Horizon ($M)						
	FY18	FY19	FY20	FY21	FY22	FY23+	
Spend	2017/18	2018/19	2019/20	2020/21	2021/22	2022/23	Total
CapEx	0.000	0.450	1.440	2.160	3.530	0.000	7.580
OpEx	0.000	0.030	0.080	0.120	0.200	0.000	0.430
Removal	0.000	0.030	0.120	0.180	0.360	0.000	0.690
Total	0.000	0.510	1.640	2.460	4.090	0.000	8.700

1.14 Key Milestones

East Providence & Warren Substations	Target Date: (Month/Year)
Planning Sanction Complete	Feb-2017
Start Preliminary Engineering	Apr-2018
Engineering Design Complete	Oct-2019
Project Sanction	Dec-2019
Construction Start	Mar-2020
Ready for Load	Mar-2022
Construction Complete	Apr-2022
Project Closure	Jul-2022

1.15 Resources, Operations and Procurement

Resource Sourcing			
Engineering & Design Resources to be provided	☑ Internal		☑ Contractor
Construction/Implementation Resources to be provided	☑ Internal		☑ Contractor
Resource Delivery			
Availability of internal resources to deliver project:	○ Red	○ Amber	◉ Green
Availability of external resources to deliver project:	○ Red	○ Amber	◉ Green
Operational Impact			
Outage impact on network system:	○ Red	○ Amber	◉ Green
Procurement Impact			
Procurement impact on network system:	○ Red	○ Amber	◉ Green

1.16 Key Issues (include mitigation of Red or Amber Resources)

1	A new ductline and bridge crossing is required and needs to be coordinated with the Rhode Island Department of Transportation (RIDOT).

1.17 Climate Change

Contribution to National Grid's 2050 80% emissions reduction target:	⊙ Neutral	○ Positive	○ Negative
Impact on adaptability of network for future climate change:	⊙ Neutral	○ Positive	○ Negative

1.18 List References

1	East Bay Area Study – Aug 2015
2	Substation Investment Grade Report – May 2015
3	Transmission Line Investment Engineering Report – Mar 2015

2 Decisions

The US Sanctioning Committee (USSC) at a meeting held on February 8, 2017:

(a) APPROVED the investment of **$2.900M** and a tolerance of +/- 10 % for the purposes of performing all engineering activities, permitting, procurement of long lead materials, and to initiate construction activities.

(b) NOTED the potential investment **$8.700M** to and a tolerance of +200%/-50 %, contingent upon submittal and approval of a Project Sanction paper following completion of final engineering and design.

(c) NOTED that **Richard Boyle** has the approved financial delegation to undertake the activities stated in (a).

Signature.....Date.....

Christopher Kelly
Senior Vice President – Electric Process and Engineering

3 Sanction Paper Detail

Title:	Warren Substation Expansion	**Sanction Paper #:**	USSC-17-002
Project #:	C065166, C065187	**Sanction Type:**	Partial Sanction
Operating Company:	The Narragansett Electric Co.	**Date of Request:**	02/08/2017
Author:	Jack P. Vaz	**Sponsor:**	Carol Sedewitz, VP, Electric Asset Management
Utility Service:	Electricity T&D	**Project Manager:**	Richard Boyle

3.1 Background

This project resulted from a comprehensive study of the East Bay area in Rhode Island that was performed to identify existing and potential future distribution system performance concerns. The recommendations in that study provide a comprehensive solution to address all the system performance concerns existing and anticipated in the East Bay area thru the year 2030.

The study area consists of the City of East Providence and the towns of Barrington, Bristol, and Warren. The area is bounded to the east by the Commonwealth of Massachusetts, to the north by the City of Pawtucket, and to the west and south by the Providence River. The geographic area is shown in Figure 1. The area has 43,000 customers with a peak electrical demand of 178MW.

3.2 Drivers

The study identified several loading, asset condition, and safety concerns through the study horizon period year of 2030. System Capacity and Performance is the primary driver justifying the recommended projects with Asset Condition as a secondary driver. This project is a component of a comprehensive solution to address all the system performance concerns in the East Bay area at least cost.

The electrical distribution system in this area is heavily loaded with limited capacity to supply new load. Excluding out of phase feeders and the small pocket of 4.16kV load, by 2020 approximately 53% of the feeders are projected to be loaded above 90% of Summer Normal (SN) rating. By 2026, 73% of the feeders are projected to be loaded above 90% of SN rating.

An analysis was performed for all feeders in the area and the MWh exposure calculated for each feeder along with any remaining un-served load once all available tie capacity was utilized. Because the feeders are heavily loaded and have geographic limitations nearly all feeders exceed the MWh exposure recommended in the Distribution Planning Guide.

Mink Street is a low-profile station with two transformers. It is located in Seekonk, MA, but includes a three-winding power transformer with a 23kV tertiary winding supplying East Bay area load. Peak loading on the 23kV winding is limited to 12MVA because capacity is needed to supply the Massachusetts 13.2kV load. This limit results in approximately 14MW of un-served load for loss of the preferred supply to Barrington substation and limits the ability to add load to the 23kV system.

A number of substations in this area have asset condition, safety, and reliability concerns that will be addressed by the projects in this paper. These substations include Barrington substation, Kent Corners substation, and Waterman substation.

Additional details regarding loading, asset condition, and safety issues are included in the East Bay Study report.

3.3 Project Description

Expand Warren [redacted] substation by adding two new feeders and two 7.2 MVAR station capacitor banks. The new feeders will be routed into Barrington to provide capacity to retire Barrington substation. This expansion addresses the asset and safety concerns at Barrington substation, eliminates the need for a [redacted] station at Mink Street, and eliminates the need for major upgrades on the 23kV supply system. A one line of the proposed station expansion is shown in Figure 2.

The new Warren feeders will be routed into Barrington. The feeders will utilize a bridge crossing and underground infrastructure to be built on a bike path as part of a Department of Transportation (DOT) bridge rebuild project. The company is currently coordinating the bridge crossing with the DOT bridge rebuild project.

3.4 Benefits Summary

This project addresses safety, asset condition, and reliability concerns in the East Bay area and is part of a comprehensive solution for the area. This work benefits all the customers in the East Bay area. Refer to the East Bay Study report for additional details on the benefits of this project.

3.5 Business and Customer Issues

There are no significant business and customer issues beyond what has been described elsewhere.

3.6 Alternatives

Alternatives and their associated cost are documented in the East Bay Study report issued in August 2015. The recommended plan, Plan 1, can generally be described as increased medium voltage capacity sourced from the existing [redacted] system. Plan 1 includes the Warren Substation Expansion project, proposed in this sanction document, plus a new East Providence Substation, Phillipsdale Substation Expansion project and minor station retirement projects.

Alternatives 2 and 3 to the recommended plan would increase medium voltage capacity through expansion and rebuild of the 23kV system. Alternative 2 includes a more substantial Phillipsdale Substation Rebuild project, a Kent Corners Substation project, a new Rumford Substation project, a Mink Street Substation project, approximately 7.5 miles of 23 kV sub-transmission line rebuild, and minor station retirement projects. Alternative 3 combines parts of the first two plans to determine if an economic hybrid solution could be created.

Plan 1, including the scope represented in this sanction document, was selected as the least cost and technically superior plan.

3.7 Safety, Environmental and Project Planning Issues

Safety, environmental, and project planning issues are described in Section 6 of the East Bay Study report.

A detailed cutover plan will be developed for the interconnection of the existing and newly installed feeders. This Plan will be developed during the Final Engineering and Design Phase.

3.8 Execution Risk Appraisal

Number	Detailed Description of Risk / Opportunity	Probability	Impact		Score		Strategy	Pre-Trigger Mitigation Plan	Residual Risk	Post Trigger Mitigation Plan
			Cost	Schedule	Cost	Schedule				
1	Obtaining the required scheduled outage	1	1	1	[redacted]		Accept	Develop plan and increase communication as scheduled outage approaches.	Construction delays may result from outage postponement.	Continue frequent communication until outage work is concluded.
2	Obtaining the proper distribution line easement rights or ability to enact existing rights.	2	2	2	[redacted]		Mitigate	Identify individual to address potential property issues immediately after Distribution Line design is completed.	Unable to acquire proper easements.	Circle back to design to determine potential alternate routes.
3	Material/equipment damaged during substation construction extending schedule	1	2	2	[redacted]		Mitigate	Require contractor to provide site security and be responsible for potential damage.	Vandalism occurs.	Enhance security measures and expedite replacement of materials and/or equipment.

NOTE: New Warren feeders will be routed into Barrington and will utilize a bridge crossing and underground infrastructure to be built on a bike path as part of a Department of Transportation (DOT) bridge rebuild project. The company is currently coordinating the bridge crossing with the DOT bridge rebuild project. If bridge project is delayed, it could impact the implementation of this project.

3.9 Permitting

Permit Name	Probability Required	Duration To Acquire Permit	Status	Estimated Completion Date
Street Opening Permits	Certain	3 Months	Not Applied For	TBD

3.10 Investment Recovery

3.10.1 Investment Recovery and Regulatory Implications

Based on current schedule the new substation feeders will enter service in FY23 and the project will be included in each fiscal year's Annual ISR Filing until that time.

3.10.2 Customer Impact

This project results in an indicative first full year revenue requirement when the asset is placed in service equal to approximately $1.318M. This is indicative only. The actual revenue requirement will differ, depending upon the timing of the next rate case and/or the timing of the next filing in which the project is included in rate base.

3.10.3 CIAC / Reimbursement

Not Applicable.

3.11 Financial Impact to National Grid

3.11.1 Cost Summary Table

Distribution:

Project Number	Project Title	Project Estimate Level (%)	Spend ($M)	Current Planning Horizon FY18 2017/18	FY19 2018/19	FY20 2019/20	FY21 2020/21	FY22 2021/22	FY23+ 2022/23	Total
C065166	Warren Sub Expansion (D-Sub)	+200/-50%	CapEx	0.000	0.220	0.700	1.050	1.530	0.000	3.500
			OpEx	0.000	0.020	0.060	0.090	0.130	0.000	0.300
			Removal	0.000	0.010	0.040	0.060	0.090	0.000	0.200
			Total	0.000	0.250	0.800	1.200	1.750	0.000	4.000
C065187	Warren Sub Expansion (D-Line)	+200/-50%	CapEx	0.000	0.230	0.740	1.110	2.000	0.000	4.080
			OpEx	0.000	0.010	0.020	0.030	0.070	0.000	0.130
			Removal	0.000	0.020	0.080	0.120	0.270	0.000	0.490
			Total	0.000	0.260	0.840	1.260	2.340	0.000	4.700
Total Project Sanction			CapEx	0.000	0.450	1.440	2.160	3.530	0.000	7.580
			OpEx	0.000	0.030	0.080	0.120	0.200	0.000	0.430
			Removal	0.000	0.030	0.120	0.180	0.360	0.000	0.690
			Total	0.000	0.510	1.640	2.460	4.090	0.000	8.700

3.11.2 Project Budget Summary Table

Project Costs per Business Plan

	Current Planning Horizon						
	FY18	FY19	FY20	FY21	FY22	FY23+	
$M	2017/18	2018/19	2019/20	2020/21	2021/22	2022/23	Total
CapEx	0.000	0.000	0.000	0.000	0.000	0.000	0.000
OpEx	0.000	0.000	0.000	0.000	0.000	0.000	0.000
Removal	0.000	0.000	0.000	0.000	0.000	0.000	0.000
Total Cost in Bus. Plan	0.000	0.000	0.000	0.000	0.000	0.000	0.000

Variance (Business Plan-Project Estimate)

	Current Planning Horizon						
	FY18	FY19	FY20	FY21	FY22	FY23+	
$M	2017/18	2018/19	2019/20	2020/21	2021/22	2022/23	Total
CapEx	0.000	(0.450)	(1.440)	(2.160)	(3.530)	0.000	(7.580)
OpEx	0.000	(0.030)	(0.080)	(0.120)	(0.200)	0.000	(0.430)
Removal	0.000	(0.030)	(0.120)	(0.180)	(0.360)	0.000	(0.690)
Total Cost in Bus. Plan	0.000	(0.510)	(1.640)	(2.460)	(4.090)	0.000	(8.700)

NOTE: The distribution costs associated with the Warren Substation Expansion along with the distribution costs of the associated projects are included in the business plan under funding projects C046726 and C046727. The money in these funding projects will be used to fund the work being proposed in this sanction paper.

3.11.3 Cost Assumptions

Cost estimate accuracy is - 50% to +200%. Project sanction cost estimates (+/- 10%) will be developed after final design is completed.

3.11.4 Net Present Value / Cost Benefit Analysis

Not financially driven.

3.11.4.1 NPV Summary Table

Not Applicable.

3.11.5 Additional Impacts

Not Applicable.

3.12 Statements of Support

3.12.1 Supporters

The supporters listed have aligned their part of the business to support the project.

Role	Individual	Responsibilities

Investment Planning	Glen DiConza	Endorses relative to distribution 5-year business plan or emergent work
Investment Planning	Laura McLaughlin	Reviewing milestone dates for synchronization with cash flows in order to move projects out of Step 0.
Resource Planning	Anne Wyman	Endorses D-Line resources, cost, estimate, schedule and Portfolio alignment
Resource Planning	Mark Phillips	Endorses substation resources, cost, estimate, schedule and Portfolio alignment
Asset Management / Planning	Alan LaBarre	Endorses scope, estimate, and schedule with the company's goals, strategies, and objectives
Engineering / Design	Suzan Martuscello	Endorses substation scope, design, conformance with design standards
Engineering / Design	Lisa Sasur	Endorses transmission line scope, design, conformance with design standards
Engineering / Design	Len Swanson	Endorses substation scope, design, conformance with design standards
Project Management	Andrew Schneller	Endorses Resources, cost estimate, schedule

3.12.2 Reviewers

The reviewers have provided feedback on the content/language of the paper.

Function	Individual
Finance	Patricia Easterly
Regulatory	Peter Zschokke
Jurisdictional Delegates	Jim Pattersonl
Procurement	Art Curran
Control Center	Michael Gallagher
Control Center	Will Houston

4 Appendices

4.1 Sanction Request Breakdown by Project

$M	C065166	C065187	Total
CapEx	$1.150	$1.380	$2.530
OpEx	$0.100	$0.040	$0.140
Removal	$0.070	$0.160	$0.230
Total	$1.320	$1.580	$2.900

4.2 Other Appendices

nationalgrid

FIGURE 1 – GEOGRAPHIC AREA

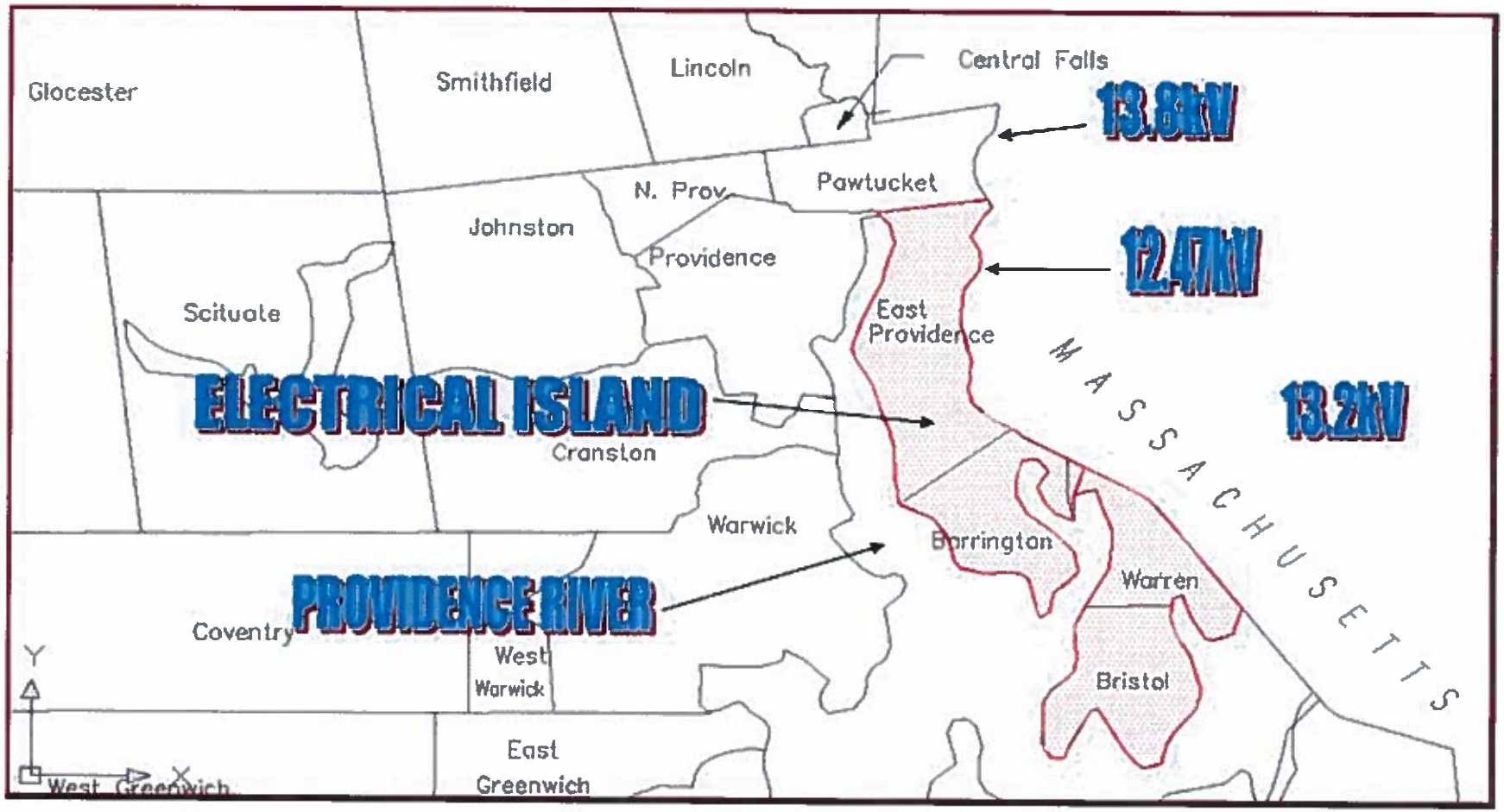

DIV 4-4 Attachment: Page 564 of 656

REDACTED

nationalgrid

FIGURE 2 – WARREN SUBSTATION ONE-LINE DIAGRAM

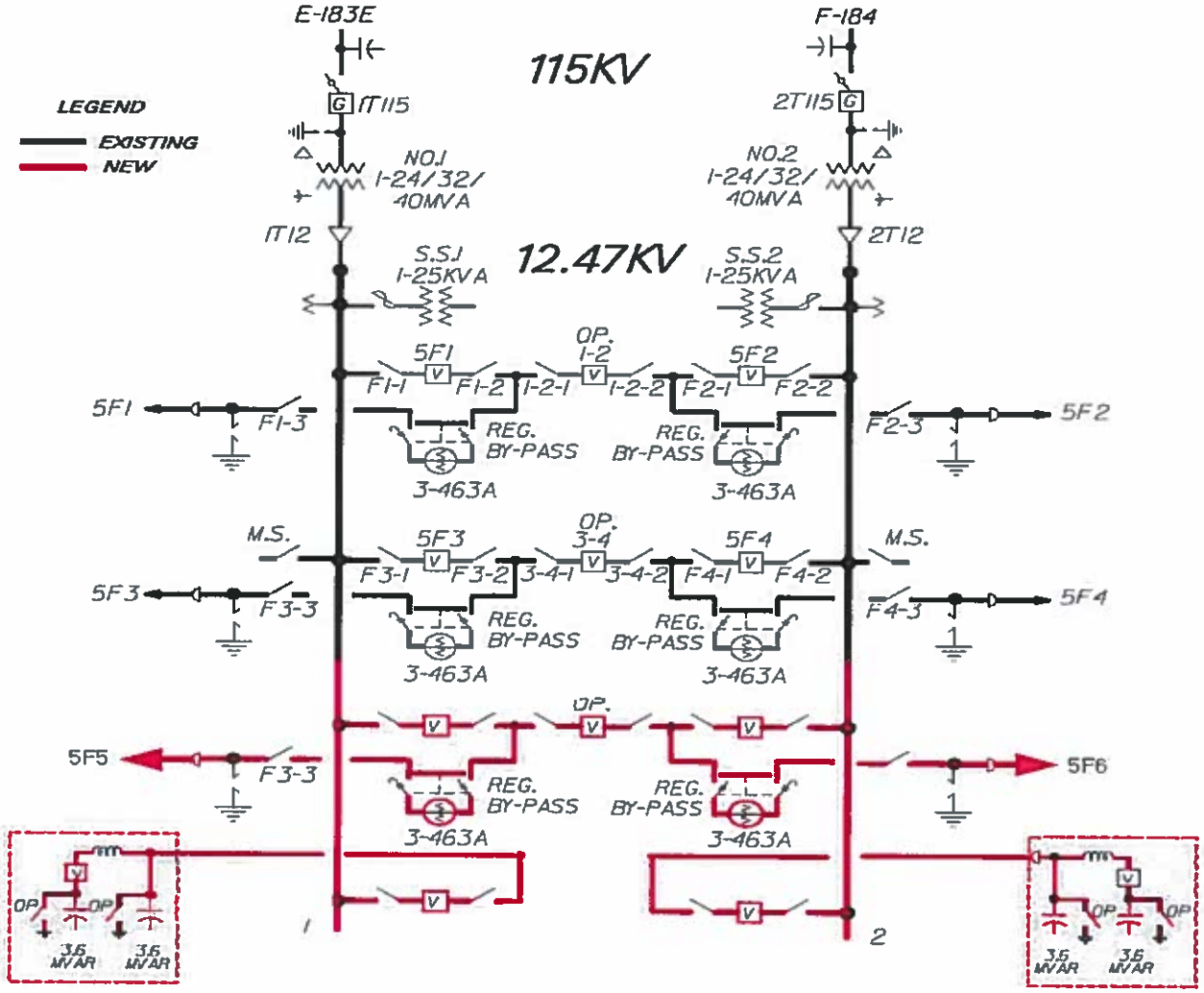

REDACTED

Resanction Request

nationalgrid

Title:	RI UG Cable Repl Program Fdr 54K21	**Sanction Paper #:**	USSC-17-249
Project #:	C055367	**Sanction Type:**	Resanction
Operating Company:	The Narragansett Electric Co.	**Date of Request:**	6/6/17
Author:	Jack Saraiva	**Sponsor:**	Carol Sedewitz, VP of Electric Asset Management
Utility Service:	Electricity T&D	**Project Manager:**	Jack Saraiva

1 *Executive Summary*

This paper requests the resanction of **C055367** in the amount **$1.200M** with a tolerance of +/- 10% for the purposes of Full Implementation and Construction.

This sanction amount is $1.200M broken down into:

$0.883M Capex
$0.137M Opex
$0.180M Removal

Note the originally requested sanction amount of $0.800M

2 *Resanction Details*

2.1 Project Summary

This construction work is part of the Company's underground cable replacement strategy. The program will replace 7600 feet of the existing paper and lead cable with EPR cable from the West Howard Substation to the Harrison Substation.

2.2 Summary of Projects

Project Number	Project Type (Elect only)	Project Title	Estimate Amount ($M)
C055367	D-Line	RI UG Cable Repl Program Fdr 54K21	1.200
		Total	1.200

2.3 Prior Sanctioning History

Previously approved sanctions are attached and listed below (Newest to Oldest).

Date	Governance Body	Sanctioned Amount	Potential Project Investment	Paper Title	Sanction Type	Paper Reference Number	Tolerance
4/24/2015	Powerplant DOA (<1M)	$0.800 M	$0.800 M	RI UG Cable Repl Program Fdr 54K21	Project Sanction	N/A	+/-10%

Over / Under Expenditure Analysis

Summary Analysis ($M)	Capex	Opex	Removal	Total
Resanction Amount	0.883	0.137	0.180	1.200
Latest Approval	0.500	0.185	0.115	0.800
Change*	0.383	(0.042)	0.065	0.400

Change = (Re-sanction – Amount Latest Approval)

2.4 Cost Summary Table

Project Number	Project Title	Project Estimate Level (%)	Spend ($M)	Prior Yrs	Current Planning Horizon Yr. 1 2017/18	Yr. 2 2018/19	Yr. 3 2019/20	Yr. 4 2020/21	Yr. 5 2021/22	Yr. 6 + 2022/23	Total
C055367	RI UG Cable Repl Program Fdr 54K21	+/- 10%	CapEx	0.698	0.185	0.000	0.000	0.000	0.000	0.000	0.883
			OpEx	0.067	0.070	0.000	0.000	0.000	0.000	0.000	0.137
			Removal	0.160	0.020	0.000	0.000	0.000	0.000	0.000	0.180
			Total	0.925	0.275	0.000	0.000	0.000	0.000	0.000	1.200

2.5 Business Plan

Business Plan Name & Period	Project included in approved Business Plan?	Over / Under Business Plan	Project Cost relative to approved Business Plan ($)
FY18-22 NE Business Plan	◉ Yes ○ No	○ Over ◉ Under ○ N/A	$0.000M

2.6 Drivers

2.6.1 Detailed Analysis Table

The following table indicates the major key variations that account for the difference between the original sanction amount and the requested resanction amount.

Detail Analysis (M's)	Over/Under Expenditure?	Amount
Increased Labor	☒ Over ☐ Under	$0.307M
Field Conditions	☒ Over ☐ Under	$0.133M

2.6.2 Explanation of Key Variations

The original approval was based on the Storms estimate. Labor went over the estimate by $0.307M due to pulling tape that had to be installed prior to installing the cable and much of the conduit had to be cleared in order to pull cable. These issues were not anticipated prior to the start of construction.
Also, additional contractor costs of $0.133M were incurred due to civil and environmental work needed to repair damaged conduit found during construction.

2.7 If cost > approved Business Plan how will this be funded?

N/A

2.8 Key Milestones

Milestone	Target Date: (Month/Year)
Project Sanction	04/2015
Construction Start	07/2016
Project Resanction	06/2017
Construction Complete	12/2017
Project Closure	03/2018

2.9 Next Planned Sanction Review

Date (Month/Year)	Purpose of Sanction Review
06/2018	Closure Paper

REDACTED

3 *Statements of Support*

3.1 Supporters

The supporters listed have aligned their part of the business to support the project.

Department	Individual	Responsibilities
Investment Planning	Glen DiConza	New England Distribution Electric Investment Planner
Resource Planning	Anne Wyman	Endorses Resources, cost estimate, schedule, and Portfolio Alignment
Asset Management	Al Labarre	Endorses scope, design, conformance with design standards

3.2 Reviewers

The reviewers have provided feedback on the content/language of the paper

Function	Individual
Finance	Mark Collison
Regulatory	Robert Humm on behalf of Renee Gurry
Jurisdictional Delegate	Sonny Anand
Procurement	Art Curran

REDACTED

4 *Decisions*

I:

(a) APPROVE this paper and the investment of $1.200M and a tolerance of +/-10%.

(b) NOTE that Jack Saraiva is the Project Manager and has the approved financial delegation.

Signature.....Date.....4/19/10.

Executive Sponsor – Christopher Kelly,
Senior Vice President – Electric Process & Engineering

REDACTED

Short Form Sanction Paper

nationalgrid

Title:	FY2019 RI Blanket Project Spending Authorization	**Sanction Paper #:**	USSC-18-077
Project #:	Multiple-See Appendix A	**Sanction Type:**	Sanction
Operating Company:	The Narragansett Electric Co.	**Date of Request:**	March 26, 2018
Author:	Janice Flynn	**Sponsor:**	Carol Sedewitz, VP Electric Asset Management
Utility Service:	Electricity T&D	**Project Manager:**	Anne Wyman

1 Executive Summary

1.1 Sanctioning Summary

This paper requests the Sanctioning of The Narragansett Electric Company Blanket projects for fiscal year 2019 on a project line item basis, + /- 10%.

This sanction amount is $39.239M broken down into:

$30.650M Capex
$ 3.246M Opex
$ 5.343M Removal

2 Project Summary and Detail

The capital blanket projects cover the installation and removal of distribution equipment in specifically identified categories and scopes of work in Rhode Island. Blanket projects are usually made up of high-volume, lower-cost (<$100k) work orders that are typically standard construction, low complexity and short-duration.

2.1 Alternatives

The majority of work supported by these blankets is considered mandatory, and typically cannot be avoided or substantially deferred.

2.2 Investment Recovery

Investment recovery will be through standard rate recovery mechanisms

2.2.1 Customer Impact

This project results in an indicative first full year revenue requirement when the asset is placed in service equal to approximately $5.330M. This is indicative only. The actual revenue requirement will differ, depending upon the timing of the next rate case and/or the timing of the next filing in which the project is included in rate base.

3 Related Projects, Scoring, Budgets

3.1 Summary of Projects

Project Number	Project Type (Elec only)	Project Title	Estimate Amount ($M)
Mutiple	Distribution-Gen Equip	See Appendix A	39.239
		Total	39.239

3.2 Associated Projects - None

3.3 Prior Sanctioning History – N/A

3.4 Category

Category	Reference to Mandate, Policy, or NPV Assumptions
◉ Mandatory	The majority of Blanket Projects are Mandatory Projects
○ Policy- Driven	
○ Justified NPV	

3.5 Asset Management Risk Score

Asset Management Risk Score: 49

Primary Risk Score Driver: (Policy Driven Projects Only)

○ Reliability ○ Environment ○ Health & Safety ◉ Not Policy Driven

3.6 Complexity Level

○ High Complexity ○ Medium Complexity ◉ Low Complexity ○ N/A

Complexity Score: 15

4 Financial

4.1 Business Plan

Business Plan Name & Period	Project included in approved Business Plan?	Over / Under Business Plan	Project Cost relative to approved Business Plan ($)
FY19-23 Distribution Electric Business Plan	◉ Yes ○ No	○ Over ○ Under ◉ NA	$0.000M

4.1.1 If cost > approved Business Plan how will this be funded?

N/A

4.2 CIAC / Reimbursement

N/A

4.3 Cost Summary Table

Project Number	Project Title	Project Estimate Level (%)	Spend	Prior Yrs	Current Planning Horizon ($M) Yr. 1 2018/19	Yr. 2 2019/20	Yr. 3 2020/21	Yr. 4 2021/22	Yr. 5 2022/23	Yr. 6 + 2023/24	Total
Multiple	See Appendix A	Est Lvl (e.g. +/- 10%)	CapEx	-	30.650	-	-	-	-	-	30.650
			OpEx	-	3.246	-	-	-	-	-	3.246
			Removal	-	5.343	-	-	-	-	-	5.343
			Total	-	39.239	-	-	-	-	-	39.239
Total Project Sanction			CapEx	-	30.650	-	-	-	-	-	30.650
			OpEx	-	3.246	-	-	-	-	-	3.246
			Removal	-	5.343	-	-	-	-	-	5.343
			Total	-	39.239	-	-	-	-	-	39.239

4.4 Project Budget Summary Table

Project Costs Per Business Plan

		Current Planning Horizon ($M)						
$M	Prior Yrs (Actual)	Yr. 1 2018/19	Yr. 2 2019/20	Yr. 3 2020/21	Yr. 4 2021/22	Yr. 5 2022/23	Yr. 6 + 2023/24	Total
CapEx	0.000	30.650	0.000	0.000	0.000	0.000	0.000	30.650
OpEx	0.000	3.246	0.000	0.000	0.000	0.000	0.000	3.246
Removal	0.000	5.343	0.000	0.000	0.000	0.000	0.000	5.343
Total Cost in Bus. Plan	0.000	39.239	0.000	0.000	0.000	0.000	0.000	39.239

Variance (Business Plan-Project Estimate)

		Current Planning Horizon ($M)						
$M	Prior Yrs (Actual)	Yr. 1 2018/19	Yr. 2 2019/20	Yr. 3 2020/21	Yr. 4 2021/22	Yr. 5 2022/23	Yr. 6 + 2023/24	Total
CapEx	0.000	0.000	0.000	0.000	0.000	0.000	0.000	0.000
OpEx	0.000	0.000	0.000	0.000	0.000	0.000	0.000	0.000
Removal	0.000	0.000	0.000	0.000	0.000	0.000	0.000	0.000
Total Cost in Bus. Plan	0.000	0.000	0.000	0.000	0.000	0.000	0.000	0.000

5 *Key Milestones*

Milestone	Target Date: (Month/Year)
Project Sanction	March 2018
Completion	March 2019
Closure Paper	July 2019

6 *Statements of Support*

6.1.1 *Supporters*

Role	Individual	Responsibilities
Investment Planner - NE	Glen DiConza	Endorses relative to 5-year business plan or emergent work
Resource Planning	Daniel Marceau and Mark Phillips	Endorses Resources, cost estimate, schedule, and Portfolio Alignment

6.1.2 Reviewers

Reviewer List	Individual
Finance	Felicia Midkiff
Regulatory	Renee Gurry
Jurisdictional Delegate	Sonny Anand
Procurement	Diego Chevere

REDACTED

7 ***Decisions***

The SE Sanctioning Committee (SESC) at a meeting held on March 26, 2018

(a) APPROVED this paper and the investment of $39.239M and a tolerance of +/- 10%

(b) NOTED that Anne Wyman is the Project Manager and has the approved financial delegation.

(c) NOTE: In the event that any Blanket projects are not approved prior to the start of the FY2020 fiscal year, the FY2019 approval limits will remain in effect until such time as the FY2020 blanket projects are approved by USSC and/or other appropriate authority for approval.

Signature.....Date.....3/28/18

Margaret Smyth
US Chief Financial Officer
Chair, SE Sanctioning Committee

Appendix A - Distribution

FY 2019 Blanket Sanction – Rhode Island

PowerPlant Project	Project Description	Capex Spending Rationale	Budget Classification	FY19 Capital Budget	FY19 Capital Related Expense	FY19 Cost of Removal	Total
COS0014	OCEAN ST-DIST-DAMAGE&FAILURE BLNKT	Damage/Failure	Damage/Failure	10,445	1,671	2,611	14,727
COS0010	OCEAN ST-DIST-NEW BUS-RESID BLANKT	Customer Request/Public Requirement	New Business - Residential	4,912	393	1,719	7,024
COS0011	OCEAN ST-DIST-NEW BUS-COMM BLANKET.	Customer Request/Public Requirement	New Business - Commercial	4,103	287	410	4,801
COS0017	OCEAN ST-DIST-ASSET REPLACE BLANKT	Asset Condition	Asset Replacement	2,353	424	376	3,153
CN04920	NARRAGANSETT TRANSFORMER PURCHASES	Customer Request/Public Requirement	Transformers & Related Equipment	2,259	-	-	2,259
CN04904	NARRAGANSETT METER PURCHASES	Customer Request/Public Requirement	Meters - Dist	1,530	-	15	1,545
COS0013	OCEAN ST-DIST-PUBLIC REQUIRE BLNKT	Customer Request/Public Requirement	Public Requirements	967	193	193	1,354
COS0004	OCEAN ST-DIST-METER BLANKET	Customer Request/Public Requirement	Meters - Dist	717	-	7	724
COS0015	OCEAN ST-DIST-RELIABILITY BLANKET.	System Capacity & Performance	Reliability	1,125	158	(219)	1,064
COS0002	OCEAN ST-DIST-SUBS BLANKET.	Damage/Failure	Damage/Failure	744	37	74	856
COS0025	OS-DIST-SUBSTATION LR/REL BLNKT	System Capacity & Performance	Reliability	300	15	3	318
COS0006	OCEAN ST-DIST-GENL EQUIP BLANKET	Non-Infrastructure	General Equipment - Dist	306	-	-	306
COS0016	OCEAN ST-DIST-LOAD RELIEF BLANKET.	System Capacity & Performance	Load Relief	307	58	77	442
COS0091	LAND AND LAND RIGHTS RI ELECT	Customer Request/Public Requirement	Land and Land Rights	225	-	-	225
COS0012	OCEAN ST-DIST-ST LIGHT BLANKET.	Customer Request/Public Requirement	Outdoor Lighting - Capital	123	18	62	203
COS0022	OCEAN ST-DIST-3RD PARTY ATTCH BLNKT	Customer Request/Public Requirement	3rd Party Attachments	81	(12)	2	71
COS0026	OS-DIST-SUBSTATION ASSET REPL BLNK	Asset Condition	Asset Replacement	153	3	11	167
			TOTALS	$ 30,650	$ 3,246	$ 5,343	$ 39,239

REDACTED

DIV 4-4 Attachment: Page 577 of 656

Rhode Island Distribution Electric

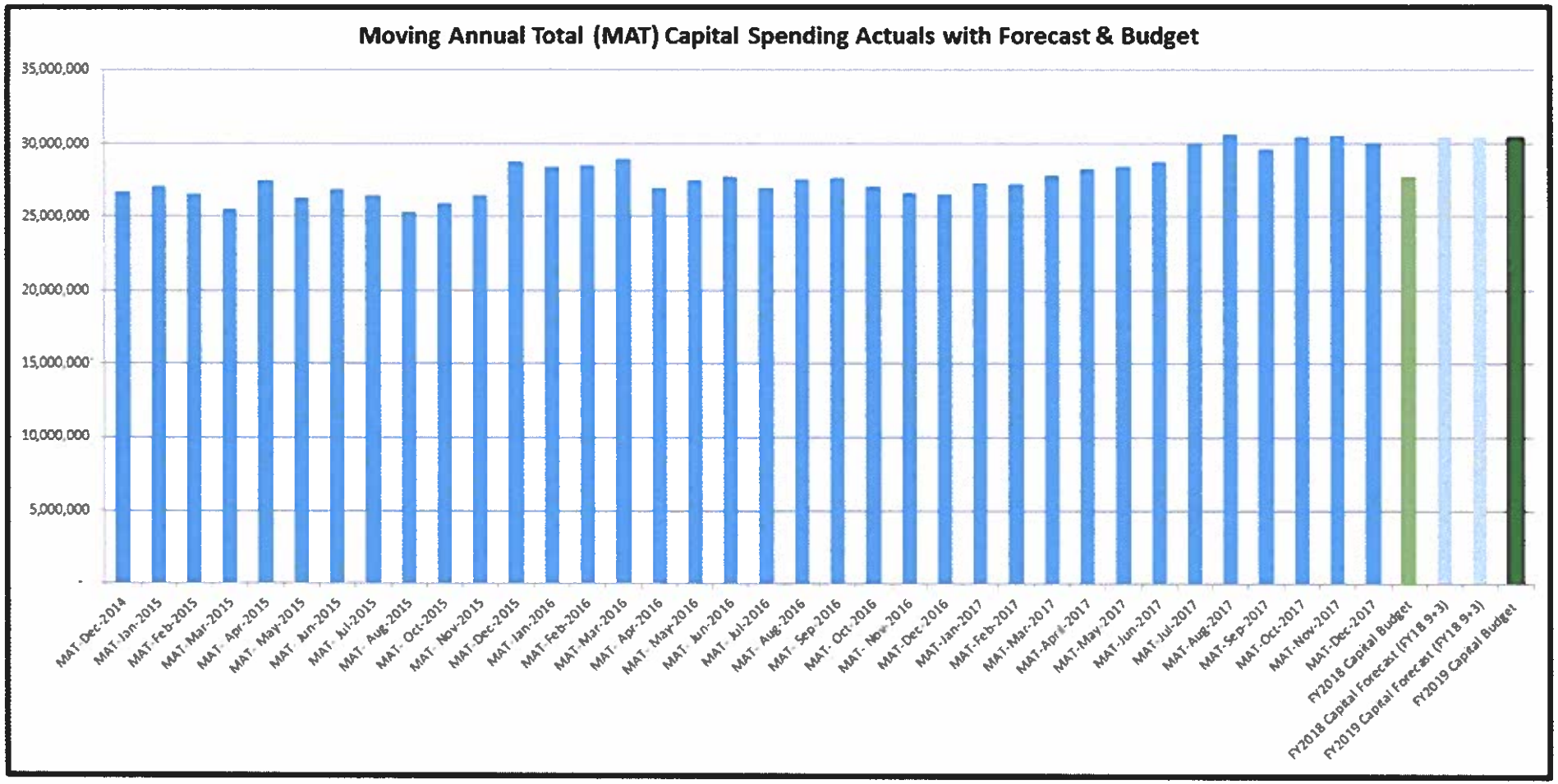

REDACTED

Short Form Sanction Paper

nationalgrid

Title:	Apponaug Short Term Plan	**Sanction Paper #:**	USSC-18-181
Project #:	C074804, C074807	**Sanction Type:**	Partial Sanction
Operating Company:	The Narragansett Electric Co.	**Date of Request:**	04/10/2018
Author:	Souresh Mukherjee	**Sponsor:**	Carol Sedewitz, VP, Electric Asset Management
Utility Service:	Electricity T&D	**Project Manager:**	James Hutchinson

1 Executive Summary

1.1 Sanctioning Summary

This paper requests **partial sanction** in the amount of **$0.300M** with a tolerance of +/- 10% for the purposes of performing all engineering activities, permitting, procurement of long lead materials, and to initiate construction activities.

*This sanction amount is **$0.300M** broken down into:*

Capex	*$0.300M*
Opex	*$0.000M*
Removal	*$0.000M*

NOTE the potential investment of $1.177M with a tolerance of +/- 25%, contingent upon submittal and approval of a Project Sanction paper following completion of final engineering and design.

1.2 Project Summary

This project resulted from a comprehensive study of the Central Rhode Island East area in Rhode Island performed to identify existing and potential future distribution system performance concerns through 2030. The recommendations in that study provide a comprehensive solution to address all the system performance concerns in the Central Rhode Island East area. This project consists of the following components:

Remove all 23 kV equipment at Apponaug substation and install relayed reclosers for transformer protection. Remove the abandoned 3MVAR station capacitor bank. The removal of the 23 kV station eliminates the need for the control house which can be retired in place.

The removal of the 23 kV station requires the 2262 and 2264 line protection to be upgraded at Drumrock. These protection upgrades will occur under a related project

(C074914) which also addresses fault duty concerns at the Drumrock 23kV station. Coordination between these projects is required.

2 Project Detail

2.1 Background

This project resulted from a comprehensive study of the Central Rhode Island East area in Rhode Island performed to identify existing and potential future distribution system performance concerns. The recommendations in that study provide a comprehensive solution to address all the system performance concerns in the Central Rhode Island East area through the year 2030.

Apponaug consists of a 23 kV station supplying (2) 12.47 kV modular feeders with 15 MW of peak load. The 23 kV station has a history of operational challenges and asset condition concerns. The concerns are documented in the area study and summarized below:

- Available short circuit current exceeds the breaker duty on the 23 kV 1-4 breaker.
- The 23 kV breakers are in poor condition, obsolete, and no longer reliable.
- The control building needs major repairs and much of the 23 kV control equipment in the building is obsolete or abandoned in place. The building has asbestos wiring and asbestos panels, which are a safety concern.
- The 23 kV auto-transfer scheme is obsolete and has a history of mis-operation which has resulted in customer outages due to its failure to operate.
- The 23 kV disconnect switches are obsolete, unreliable, and often fail to latch close.

There is minimal value to the 23kV station. The most prudent investment is to retire the 23 kV station, remove all 23 kV equipment, and install relayed reclosers for transformer protection. The abandoned 3MVAR station capacitor bank will also be removed. The removal of the 23 kV station eliminates the need for the control house which can be retired in place.

The removal of the 23 kV station requires the 2262 and 2264 line protection to be upgraded at Drumrock. These upgrades will occur under a related project (C074914) which also addresses fault duty concerns at the Drumrock 23 kV station. Coordination between these projects is required.

NOTE: Although the retirement of the 23 kV station at Apponaug eliminates the need for the control building it is unlikely the building can be demolished. The building is located within a historic district and although the building itself does not appear on the historic register, it may still be considered a historic building. [redacted]

[redacted]

2.2 Drivers

The driver for this project is reliability. The Apponaug 23 kV station has obsolete and unreliable equipment. This project retires the 23 kV station equipment to address the reliability concerns. The full analysis of the drivers and how each project addresses the comprehensive system needs is described within the study.

2.3 Project Description

Remove all 23 kV equipment at Apponaug substation and install relayed reclosers for transformer protection. Remove the abandoned 3MVAR station capacitor bank. The removal of the 23 kV station eliminates the need for the control house which can be retired in place.

The removal of the 23 kV station requires the 2262 and 2264 line protection to be upgraded at Drumrock. These protection upgrades will occur under a related project (C074914) which also addresses fault duty concerns on the Drumrock 23 kV station. Coordination between these projects is required.

2.4 Benefits

This project resolves the most immediate asset condition and reliability issues identified in the study analysis at Apponaug substation.

2.5 Business & Customer Issues

Although the recommended plan for Apponaug eliminates the need for the control building it is unlikely the building can be demolished. The building is located within a historic district and although the building itself does not appear on the historic register, it may still be considered a historic building. [redacted]

2.6 Alternatives

Do Nothing - This project replaces obsolete distribution plant. Doing nothing would not address the chronic reliability concerns impacting the customers in this area. Thus, this option is not recommended.

2.7 Investment Recovery

Investment recovery will be through standard rate recovery mechanisms approved by appropriate regulatory agencies.

2.7.1 Customer Impact

This project results in an indicative first full year revenue requirement when the asset is placed in service equal to approximately $0.162M. This is indicative only. The actual revenue requirement will differ, depending upon the timing of the next rate case and/or the timing of the next filing in which the project is included in rate base.

3 Related Projects, Scoring, Budgets

3.1 Summary of Projects

Project Number	Project Type (Elec only)	Project Title	Estimate Amount ($M)
C074804	D-Sub	Apponaug 23kV Retirements (D-Sub)	0.977
C074807	D-Line	Apponaug 23kV Retirements (D-Line)	0.200
		Total	1.177

3.2 Associated Projects

Project Number	Project Title	Estimate Amount ($M)
C074914	Drumrock 23kV Improvements (T-Sub)	0.370
	Total	0.370

3.3 Prior Sanctioning History

None

3.4 Category

Category	Reference to Mandate, Policy, NPV, or Other
○ Mandatory ◉ Policy- Driven ○ Justified NPV ○ Other	Distribution Planning Criteria Strategy, February 2011

3.5 Asset Management Risk Score

Asset Management Risk Score: **44**

Primary Risk Score Driver: (Policy Driven Projects Only)

◉ Reliability ○ Environment ○ Health & Safety ○ Not Policy Driven

3.6 Complexity Level

○ High Complexity ○ Medium Complexity ◉ Low Complexity ○ N/A

Complexity Score: **18**

3.7 Next Planned Sanction Review

Date (Month/Year)	Purpose of Sanction Review
June 2019	Project Sanction

4 Financial

4.1 Business Plan

Business Plan Name & Period	Project included in approved Business Plan?	Over / Under Business Plan	Project Cost relative to approved Business Plan ($)
FY2019-2023 NE Distribution Electric Capital Plan	◉ Yes ○ No	◉ Over ○ Under ○ NA	$0.144M

4.1.1 If cost > approved Business Plan how will this be funded?

Re-allocation of funds within the portfolio has been managed by Resource Planning to meet jurisdictional budgetary, statutory and regulatory requirements.

4.2 CIAC / Reimbursement

None.

4.3 Cost Summary Table

Project Number	Project Title	Project Estimate Level (%)	Spend	Prior Yrs	Current Planning Horizon ($M) Yr. 1 2018/19	Yr. 2 2019/20	Yr. 3 2020/21	Yr. 4 2021/22	Yr. 5 2022/23	Yr. 6 + 2023/24	Total
C074804	Apponaug 23kV Retirements (D-Sub)	+25/-25%	CapEx	-	0.150	0.460	0.150	-	-	-	0.760
			OpEx	-	-	0.005	0.005	-	-	-	0.010
			Removal	-	-	0.107	0.100	-	-	-	0.207
			Total	-	0.150	0.572	0.255	-	-	-	0.977
C074807	Apponaug 23kV Retirements (D-Line)	+25/-25%	CapEx	-	0.035	0.100	0.035	-	-	-	0.170
			OpEx	-	-	0.005	0.005	-	-	-	0.010
			Removal	-	-	0.010	0.010	-	-	-	0.020
			Total	-	0.035	0.115	0.050	-	-	-	0.200
Total Project Sanction			CapEx	-	0.185	0.560	0.185	-	-	-	0.930
			OpEx	-	-	0.010	0.010	-	-	-	0.020
			Removal	-	-	0.117	0.110	-	-	-	0.227
			Total	-	0.185	0.687	0.305	-	-	-	1.177

4.4 Project Budget Summary Table

Project Costs Per Business Plan

$M	Prior Yrs (Actual)	Current Planning Horizon ($M) Yr. 1 2018/19	Yr. 2 2019/20	Yr. 3 2020/21	Yr. 4 2021/22	Yr. 5 2022/23	Yr. 6 + 2023/24	Total
CapEx	0.000	0.186	0.565	0.185	0.000	0.000	0.000	0.936
OpEx	0.000	0.007	0.021	0.007	0.000	0.000	0.000	0.035
Removal	0.000	0.012	0.037	0.012	0.000	0.000	0.000	0.062
Total Cost in Bus. Plan	0.000	0.205	0.623	0.205	0.000	0.000	0.000	1.033

Variance (Business Plan-Project Estimate)

		Current Planning Horizon ($M)						
$M	Prior Yrs (Actual)	Yr. 1 2018/19	Yr. 2 2019/20	Yr. 3 2020/21	Yr. 4 2021/22	Yr. 5 2022/23	Yr. 6 + 2023/24	Total
CapEx	0.000	0.001	0.005	0.000	0.000	0.000	0.000	0.006
OpEx	0.000	0.007	0.011	(0.003)	0.000	0.000	0.000	0.015
Removal	0.000	0.012	(0.080)	(0.098)	0.000	0.000	0.000	(0.165)
Total Cost in Bus. Plan	0.000	0.020	(0.064)	(0.100)	0.000	0.000	0.000	(0.144)

5 Key Milestones

Milestone	Target Date: (Month/Year)
Partial Sanction	April 2018
Engineering Design Start	May 2018
Engineering Design Complete	May 2019
Project Sanction	June 2019
Construction Start	September 2019
Construction Complete	September 2020
Project Closure	January 2021

6 Statements of Support

6.1.1 Supporters

The supporters listed have aligned their part of the business to support the project.

Role	Individual	Responsibilities
Investment Planning	DiConza, Glen	Endorses relative to 5-year business plan or emergent work
Resource Planning	Marceau, Daniel Phillips, Mark	Endorses construction resources, cost estimate, schedule, and portfolio alignment
Asset Management / Planning	Constable, Ryan	Endorses scope, estimate, and schedule with the Company's goals, strategies, and objectives
Engineering and Design	Larrabee, Mark Helmuth, Kevin Swanson, Leonard	Endorses scope, design. Conformance with design standards
Project Management	Vacher, Shaun	Endorses resources, cost estimate, schedule
Electric Project Estimation	Duffy, John	Endorses Cost Estimate

6.1.2 Reviewers

The reviewers have provided feedback on the content/language of the paper.

Reviewer List	Individual
Finance	Midkiff, Felicia
Regulatory	Turieo, Edward
Jurisdictional Delegate	Anand, Sonny
Procurement	Chevere, Diego
Control Center	Gallagher, Michael

6.1.3 List References

None.

REDACTED

7 ***Decisions***

I:

(a) APPROVE the investment of $0.300M and a tolerance of +/- 10 % for the purposes of performing all engineering activities, permitting, procurement of long lead materials, and to initiate construction activities.

(b) NOTE the potential investment of $1.177M and a tolerance of +/- 25%, contingent upon submittal and approval of a Project Sanction paper following completion of final engineering and design.

(c) NOTE that James Hutchinson is the Project Manager and Mark Phillips has the approved financial delegation to undertake the activities stated in (a).

Signature.....Date...4/13/18.....

David H. Campbell

Vice President, ServCo Business Partnering, USSC Chair

Other Appendices

7.1 Sanction Request Breakdown by Project

$M	C074804	C074807	Total
CapEx	0.250	0.050	0.300
OpEx	0.000	0.000	0.000
Removal	0.000	0.000	0.000
Total	0.250	0.050	0.300

Figure 1: Study Area

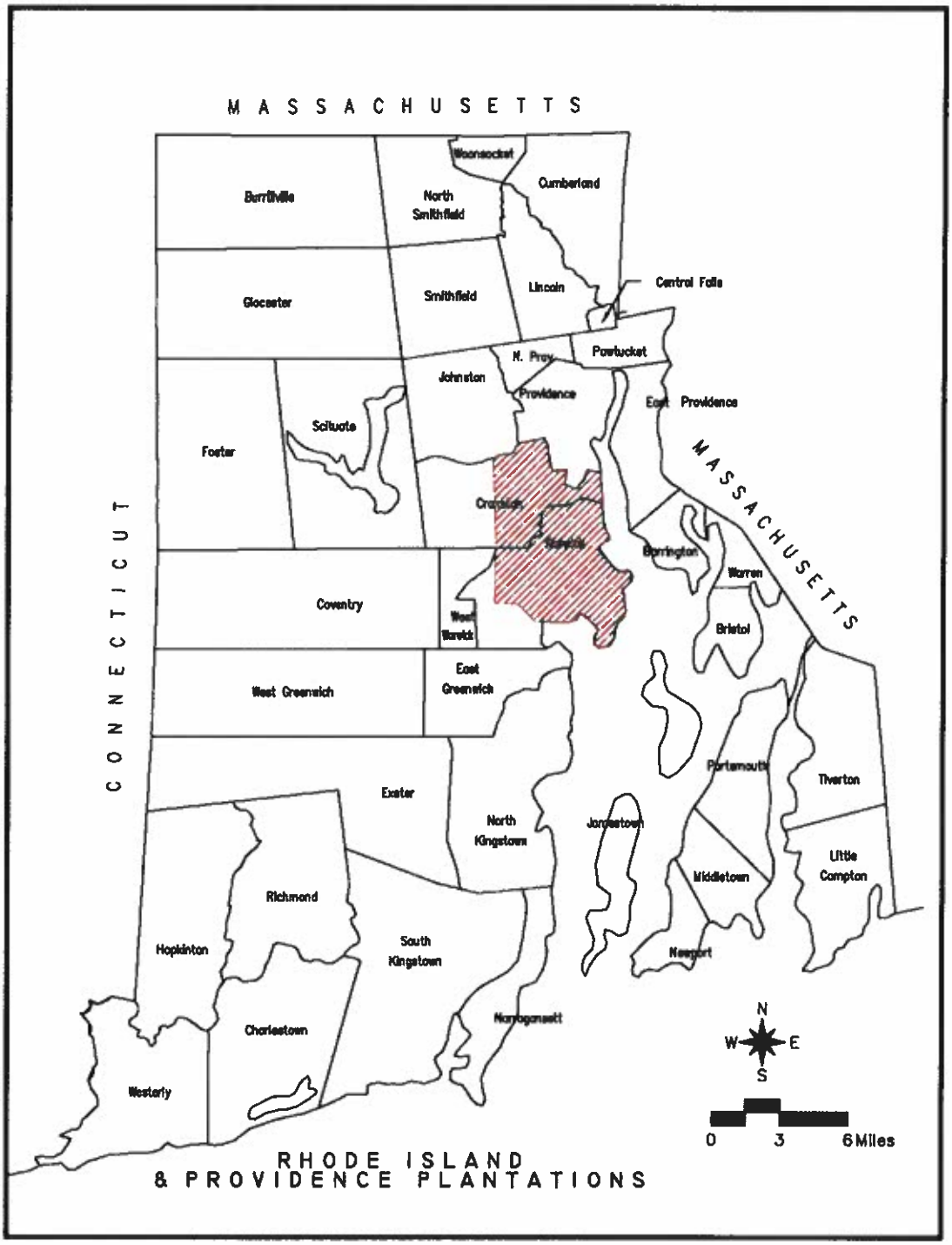

REDACTED

Short Form Sanction Paper

nationalgrid

Title:	FY2019 RI Major Storm Program Projects Sanction	**Sanction Paper #:**	USSC-18-223
Project #:	C022433	**Sanction Type:**	Sanction
Operating Company:	The Narragansett Electric Co.	**Date of Request:**	6/5/2018
Author:	Glen DiConza	**Sponsor:**	Carol A. Sedewitz, VP Electric Asset Management
Utility Service:	Electricity T&D	**Project Manager:**	Daniel Marceau

1 *Executive Summary*

1.1 *Sanctioning Summary*

This paper requests the sanction of $2.480M for the Major Storm Program Project C022433 for The Narragansett Electric Company. The sanction amount will have a tolerance of +/- 10% for the purposes of capital replacements performed during major storm events in fiscal year 2019.

The sanction amount is **$2.480M** is broken down as follows:

$1.600M Capex
$0.320M Opex
$0.560M Removal

1.2 *Project Summary*

This is the annual sanction of the Major Storm Program Project. This program is meant to estimate spending on capital replacements required to be performed during major storm events during the fiscal year.

2 *Project Detail*

2.1 *Background*

A Company level storm program project has been set up to track the cost of capital replacements/additions during major storm events for the given fiscal year. Capital work orders are set up for each storm event so that the costs can be properly tracked and

reported. This sanction does not include expense only storm projects tracked and recovered separately through the storm fund recovery mechanism.

2.2 *Drivers*

Each year the Company experiences severe weather events that cause damage to the electrical system and require capital repair. While the storm related costs vary greatly between and among fiscal years, the budget for this project has been set up as an "estimate only" so that the capital costs are more easily tracked, collected and reported as appropriate.

2.3 *Project Description*

This program project has been created so it is available for work orders to be opened immediately as an anticipated storm approaches the Company's service territory. These work orders will be used to collect the costs of capital replacements/additions repairing damage to the electrical system caused by a storm.

The budgeted amount is estimated based on historic spending levels and recent trends experienced in the "Major Storms" budget classification. The dollars are set aside as part of the capital plan so that other planned work is not required to be delayed or moved out of the capital plan whenever capital replacement costs due to a storm are incurred.

2.4 *Benefits*

This program project is required to facilitate the proper charging and reporting of storm related capital charges. Having the accounting immediately available is an important step to proper cost charging/tracking during storm events.

2.5 *Business & Customer Issues*

There are no significant business or customer issues beyond what has been described elsewhere.

2.6 *Alternatives*

The Company's response to major weather events is mandatory, including with respect to necessary capital replacements, so there are no viable alternatives. Without this program, the Company would be unable to properly track and report costs for the necessary capital replacements.

2.7 *Investment Recovery*

Investment recovery will be through standard rate recovery mechanisms.

2.7.1 Customer Impact

Customer Impact will vary based on the actual amounts incurred during FY2019.

3 Related Projects, Scoring, Budgets

3.1 *Summary of Projects*

Project Number	Project Type (Elec only)	Project Title	Estimate Amount ($M)
C022433	D-Line	OSD Storm Cap Proj	$2.480
		Total	$2.480

3.2 *Associated Projects*

N/A

3.3 *Prior Sanctioning History*

N/A

3.4 *Category*

Category	Reference to Mandate, Policy, NPV, or Other
◉ Mandatory	Mandatory Major Storm/Damage Failure Capital
○ Policy- Driven	
○ Justified NPV	
○ Other	

3.5 *Asset Management Risk Score*

Asset Management Risk Score: 49

Primary Risk Score Driver: (Policy Driven Projects Only)

○ Reliability ○ Environment ○ Health & Safety ◉ Not Policy Driven

3.6 *Complexity Level*

○ High Complexity ○ Medium Complexity ◉ Low Complexity ○ N/A

Complexity Score: 15

3.7 *Next Planned Sanction Review*

Date (Month/Year)	Purpose of Sanction Review
June 2019	Project Closure Sanction

4 Financial

4.1 *Business Plan*

Business Plan Name & Period	Project included in approved Business Plan?	Over / Under Business Plan	Project Cost relative to approved Business Plan ($)
FY2019–FY2023 New England Distribution Electric Capital Plan	◉ Yes ○ No	○ Over ○ Under ◉ NA	$0.000M

4.1.1 If cost > approved Business Plan how will this be funded?

N/A

4.2 *CIAC / Reimbursement*

N/A

4.3 *Cost Summary Table*

Project Number	Project Title	Project Estimate Level (%)	Spend	Prior Yrs	Current Planning Horizon ($M) Yr. 1 2018/19	Yr. 2 2019/20	Yr. 3 2020/21	Yr. 4 2021/22	Yr. 5 2022/23	Yr. 6 + 2023/24	Total
C022433	OSD Storm Cap Proj	+/- 10%	CapEx	-	1.600	-	-	-	-	-	1.600
			OpEx	-	0.320	-	-	-	-	-	0.320
			Removal	-	0.560	-	-	-	-	-	0.560
			Total	-	2.480	-	-	-	-	-	2.480
Total Project Sanction			CapEx	-	1.600	-	-	-	-	-	1.600
			OpEx	-	0.320	-	-	-	-	-	0.320
			Removal	-	0.560	-	-	-	-	-	0.560
			Total	-	2.480	-	-	-	-	-	2.480

4.4 *Project Budget Summary Table*

Project Costs per Business Plan

$M	Prior Yrs (Actual)	Current Planning Horizon ($M) Yr. 1 2018/19	Yr. 2 2019/20	Yr. 3 2020/21	Yr. 4 2021/22	Yr. 5 2022/23	Yr. 6 + 2023/24	Total
CapEx	0.000	1.600	0.000	0.000	0.000	0.000	0.000	1.600
OpEx	0.000	0.320	0.000	0.000	0.000	0.000	0.000	0.320
Removal	0.000	0.560	0.000	0.000	0.000	0.000	0.000	0.560
Total Cost in Bus. Plan	0.000	2.480	0.000	0.000	0.000	0.000	0.000	2.480

Variance (Business Plan-Project Estimate)

$M	Prior Yrs (Actual)	Current Planning Horizon ($M) Yr. 1 2018/19	Yr. 2 2019/20	Yr. 3 2020/21	Yr. 4 2021/22	Yr. 5 2022/23	Yr. 6 + 2023/24	Total
CapEx	0.000	0.000	0.000	0.000	0.000	0.000	0.000	0.000
OpEx	0.000	0.000	0.000	0.000	0.000	0.000	0.000	0.000
Removal	0.000	0.000	0.000	0.000	0.000	0.000	0.000	0.000
Total Cost in Bus. Plan	0.000	0.000	0.000	0.000	0.000	0.000	0.000	0.000

5 Key Milestones

Milestone	Target Date: (Month/Year)
Project Sanction	June 2018
Construction Start	April 2018
Construction Complete - CC	March 2019
As Builts	Entered after each storm event
Project Closure Sanction	June 2019

6 Climate Change

Contribution to National Grid's 2050 80% emissions reduction target:	◉ Neutral	○ Positive	○ Negative
Impact on adaptability of network for future climate change:	◉ Neutral	○ Positive	○ Negative

7 Statements of Support

7.1.1 Supporters

The supporters listed have aligned their part of the business to support the project.

Depart	Name	Responsibilities
Investment Planner	Glen DiConza	Endorses relative to 5-year business plan or emergent work
Resource Planning D-Line	Daniel Marceau	Endorses resources, cost, schedule
Distribution Planning	Ryan Constable	Endorses scope, design, design standard
Engineering and Design	Kevin Hellmuth	Endorses scope, design, design standard

7.1.2 Reviewers

The reviewers have provided feedback on the content/language of the paper.

Function	Individual
Finance	Midkiff, Felicia
Regulatory	Turieo, Ed
Jurisdictional Delegates	Anand, Sonny
Procurement	Chevere, Diego

7.1.3 List References

N/A

8 Decisions

I:

(a) APPROVE this paper and the investment of $2.480M and a tolerance of +/-10%

(b) NOTE that Daniel Marceau is the Program Manager and has the approved financial delegation.

(c) NOTE: In the event that this Program project is not approved prior to the start of FY2020, the FY2019 approval limits will remain in effect until such time as the FY2020 program projects are approved by USSC and/or other appropriate authority for approval.

Signature.....D H. Campbell.....Date.....6/7/18.....

David H. Campbell, Vice President ServCo Business Partnering, USSC Chair

9 Other Appendices

N/A

REDACTED

Short Form Sanction Paper

nationalgrid

Title:	RI FY19 Distribution Inspection And Maintenance (I&M) Program	**Sanction Paper #:**	USSC-18-234
Project #:	C026281	**Sanction Type:**	Sanction
Operating Company:	The Narragansett Electric Co.	**Date of Request:**	6/19/2018
Author:	Robert Pendrake	**Sponsor:**	Carol A. Sedewitz, VP Electric Asset Management
Utility Service:	Electricity T&D	**Project Manager:**	Dan Marceau

1 Executive Summary

1.1 Sanctioning Summary

This paper requests the sanction of projects C026281 in the amount of $1.581M and a tolerance of +/- 10% for the purposes of full implementation of the program in FY19.

This sanction amount of $1.581M for FY19 is broken down into:

$1.275M Capex
$0.191M Opex Related To Capex
$0.115M Removal

1.2 Project Summary

The Inspection and Maintenance (I&M) Program is funded annually to inspect and address overhead and underground distribution assets in need of repair or replacement. This program is partially mandated by the Rhode Island Public Utilities Commission (RIPUC).

2 Project Detail

2.1 Background

R.I.G.L. §39-2-25 requires the following:

- Perform contact voltage testing in designated contact voltage risk areas for contact voltage hazards on all conductive surfaces in public rights-of-way using equipment and technology as determined by the commission. By June 30, 2013, conduct an initial survey of no less than 40% of designated contact voltage risk areas. Beginning July 1, 2013, annually survey no less than 20% of designated contact voltage risk areas.

In addition to meeting the mandated requirements above, the program will drive a consistent inspection approach to benefit customers by evaluating asset health and allowing for a safe, adequate system. This program is intended to meet National Electric Safety Code (NESC) section 214 which outlines inspection of equipment guidelines. Additionally, this project will allow for the avoidance of potential environmental issues related to some assets, such as transformers.

This sanction will provide for the FY19 overhead and underground distribution I&M Program in Rhode Island, including stray voltage testing.

2.2 *Drivers*

The primary drivers of the program are safety and environmental. Asset replacement prior to failure provides incremental employee and public safety benefits and avoidance of potential environmental problems related to some assets, i.e. transformers and capacitor banks. This program will satisfy section 214 of the NESC, which outlines inspection of equipment guidelines for electric utilities. In addition, implementation of this strategy addresses safety concerns relating to contact voltage on all publicly accessible Company distribution and sub-transmission overhead and underground line facilities.

The secondary driver of this program is to improve asset condition. The combination of cyclical inspection and replacement of deteriorated equipment provides for a sustainable system while retaining assets in service until condition warrants their replacement.

2.3 *Project Description*

The I&M Strategy is a comprehensive inspection and maintenance program for overhead and underground distribution line assets. In this program, each asset in the system will be inspected on a cycle and inspection results will be documented and tracked in a common database. The strategy drives a consistent inspection approach in all states that National Grid serves and benefits customers by ensuring the distribution system is safe, sustainable and reliable. Improvements in the quality of data collection have enhanced National Grid's knowledge of assets within the system so that the company can make decisions to better serve customers.

The I&M Strategy recommends a cyclical inspection and maintenance program. The inspection priority system will identify and provide for the timely condition-based replacement of any visibly damaged or deteriorated assets. The following is a brief description of the inspection program:

Starting in FY19 work identified as a result of the Inspection and Maintenance program in New England will be prioritized based on the severity of the issues found. Priority Codes are as follows:

Level 1 - Shall be repaired/replaced within one week
Level 2 - Shall be repaired/replaced within one year
Level 3 - Shall be repaired/replaced within three years
Level 4 - Collect Inventory information on actual field conditions
Level 9 - Temporary Repairs and abnormal conditions.

Line assets across the system shall be inspected in accordance with the National Grid Electric Operating Procedures (EOP) listed below:

Overhead Distribution Inspection EOP-D004
Underground Distribution Inspection EOP-UG006
Elevated Voltage Testing EOP-G016
Street Light Standards EOP-G017

Under this plan, the company will continue to perform inspections and Elevated Voltage (EV) testing within the specified cycle and replace/repair all deficiencies identified.

Current I&M Strategy expects funding for inspections, EV testing and repairs on a five year cycle. This plan will continue inspections and EV testing on a five year cycle, and will execute inspected repairs identified during the initial cycle of inspections. Equipment identified was based on a previous inspection scope and construction will be executed on a not to exceed funding basis. This cycle funding is consistent with program scope/budget agreed upon with the Rhode Island Division of Public Utilities and Carriers (Division) staff, and approved by the RIPUC, during the annual proceedings that produce the Electric Infrastructure, Safety, and Reliability (ISR) Plan. The program scope and funding will be a topic of annual discussion within the ISR proceeding based on execution and effectiveness

This plan:

- Is consistent with the budget agreed upon with the RI Division and approved by the RIPUC.
- Ensures that the safety and reliability of assets are maintained and addresses any Level 1 repairs
- Ensures that National Grid will achieve the regulatory requirements associated with this program.

2.4 *Benefits*

2.4.1 Safety & Environmental

Asset replacement prior to failure provides incremental employee and public safety benefits and avoidance of potential environmental problems related to some assets, i.e. transformers and poles. This program will satisfy section 214 of the NESC, which outlines inspection of equipment guidelines for electric utilities. In addition, implementation of this strategy addresses safety concerns relating to contact voltage on all publicly accessible Company distribution line facilities.

2.4.2 Customer/Regulatory/Reputation

The I&M program is partially mandated in Massachusetts The main customer benefits from this strategy are improved safety (e.g.elimination of elevated voltage hazards), improved reliability, and maintaining a sustainable distribution system. The program retains assets in service until condition warrants their replacement, as opposed to time based replacement.

2.4.3 Reliability

Condition based repair / replacement will maintain reliability and support the creation of a sustainable system. Collectively deteriorated equipment related interruptions are one of the main drivers of poor reliability.

2.5 *Business & Customer Issues*

There are no significant business or customer issues beyond what has been described elsewhere in this papaer.

2.6 *Alternatives*

Alternative 1: Do nothing and repair or replace assets upon failure.

This alternative will create increased risk to the failure of assets resulting in a potentially negative impact to public safety and reliability. In addition, the Company would not be meeting its regulatory obligations. Therefore this alternative is not recommended

2.7 *Investment Recovery*

Investment recovery will be through standard rate recovery mechanisms.

2.7.1 Customer Impact

This project results in an indicative first full year revenue requirement when the asset is placed in service equal to approximately $0.222M.

3 *Related Projects, Scoring, Budgets*

3.1 *Summary of Projects*

Project Number	Project Type (Elec only)	Project Title	Estimate Amount ($M)
C026281	D-Line	I&M - OS D-Line OH Work From Insp	1.581

3.2 *Associated Projects*

Project Number	Project Title	Estimate Amount ($M)
E007252	I&M - OS D-Line UOHWork From Insp	0.409
E013729	Mobil Votage Testing Repairs - RI	0.045
E0S0003	Ocean St Dist- Insp & Pat	0.285

3.3 *Prior Sanctioning History*

N/A

3.4 *Category*

Category	Reference to Mandate, Policy, NPV, or Other
◉ Mandatory ○ Policy- Driven ○ Justified NPV ○ Other	EOP D004 Distribution Line Patrol And Maintenance EOP UG006 Underground Inspection and Maintenance EOP G016 Equipment Elevated Voltage Testing EOP G017 Street Light Standard Inspection Program R.I.G.L. §39-2-25 NESC Handbook 2012 edition section 214

3.5 *Asset Management Risk Score*

Asset Management Risk Score: _45__

Primary Risk Score Driver: (Policy Driven Projects Only)

○ Reliability ○ Environment ○ Health & Safety ◉ Not Policy Driven

3.6 *Complexity Level*

○ High Complexity ○ Medium Complexity ◉ Low Complexity ○ N/A

Complexity Score: _15____

3.7 *Next Planned Sanction Review*

N/A

4 Financial

4.1 *Business Plan*

Business Plan Name & Period	Project included in approved Business Plan?	Over / Under Business Plan	Project Cost relative to approved Business Plan ($)
FY 19-23 NE Distribution Capital Plan	◉ Yes ○ No	○ Over ◉ Under ○ NA	0.527M

4.1.1 If cost > approved Business Plan how will this be funded?

N/A

4.2 *CIAC / Reimbursement*

N/A

4.3 *Cost Summary Table*

Project Number	Project Title	Project Estimate Level (%)	Spend	Prior Yrs	Current Planning Horizon ($M) Yr. 1 2018/19	Yr. 2 2019/20	Yr. 3 2020/21	Yr. 4 2021/22	Yr. 5 0	Yr. 6 + 0	Total
C026281	I&M - OS D-Line OH Work From Insp	Est Lvl (e.g. +/- 10%)	CapEx	-	1.275	-	-	-	-	-	1.275
			OpEx	-	0.191	-	-	-	-	-	0.191
			Removal	-	0.115	-	-	-	-	-	0.115
			Total	-	1.581	-	-	-	-	-	1.581
Total Project Sanction			CapEx	-	1.275	-	-	-	-	-	1.275
			OpEx	-	0.191	-	-	-	-	-	0.191
			Removal	-	0.115	-	-	-	-	-	0.115
			Total	-	1.581	-	-	-	-	-	1.581

4.4 *Project Budget Summary Table*

Project Costs per Business Plan

$M		Current Planning Horizon ($M) Yr. 1 2018/19	Yr. 2 2019/20	Yr. 3 2020/21	Yr. 4 2021/22	Yr. 5 2022/23	Yr. 6 + 2023/24	Total
CapEx		1.700	0.000	0.000	0.000	0.000	0.000	1.700
OpEx		0.255	0.000	0.000	0.000	0.000	0.000	0.255
Removal		0.153	0.000	0.000	0.000	0.000	0.000	0.153
Total Cost in Bus. Plan		2.108	0.000	0.000	0.000	0.000	0.000	2.108

Variance (Business Plan-Project Estimate)

$M		Current Planning Horizon ($M) Yr. 1 2018/19	Yr. 2 2019/20	Yr. 3 2020/21	Yr. 4 2021/22	Yr. 5 2022/23	Yr. 6 + 2023/24	Total
CapEx		0.425	0.000	0.000	0.000	0.000	0.000	0.425
OpEx		0.064	0.000	0.000	0.000	0.000	0.000	0.064
Removal		0.038	0.000	0.000	0.000	0.000	0.000	0.038
Total Cost in Bus. Plan		0.527	0.000	0.000	0.000	0.000	0.000	0.527

5 ***Key Milestones***

Milestone	**Target Date: (Month/Year)**
Project Sanction	June 2018
Construction Start	Multiple Dates
Construction Complete - CC	March 2019
Project Closure Sanction	June 2019

6 Climate Change

Contribution to National Grid's 2050 80% emissions reduction target:	◉ Neutral	○ Positive	○ Negative
Impact on adaptability of network for future climate change:	◉ Neutral	○ Positive	○ Negative

7 Statements of Support

7.1.1 Supporters

The supporters listed have aligned their part of the business to support the project.

Department	Individual	Responsibilities
Investment Planning	Glen Diconza	Endorses relative to 5-year business plan or emergent Work
Resource Planning	Dan Marceau	Endorses Resources, cost estimate, schedule, and Portfolio Alignment
Asset Management	Ryan Constable	Endorses scope, estimate, and schedule with the company's goals, strategies, and objectives

7.1.2 Reviewers

The reviewers have provided feedback on the content/language of the paper.

Function	Individual
Finance	Felicia Midkiff
Regulatory	Ed Turieo
Jurisdictional Delegate	Sonny Anand

7.1.3 List References

N/A

REDACTED

8 Decisions

I:

(a) APPROVE this paper and the investment of $1.581M and a tolerance of +/-10%

(b) NOTE that Tim Hall is the Project Manager and has the approved financial delegation.

(c) NOTE: In the event that any Blanket/Programs are not approved prior to the start of FY20, the FY19 approval limits will remain in effect until such time as the FY20 Blanket/Programs are approved by USSC and/or other appropriate authority for approval.

Signature.....D H. Campbell.....Date.....7/26/18.....

David H. Campbell, Vice President ServCo Business Partnering, USSC Chair

9 Other Appendices

9.1 *Sanction Request Breakdown by Project*

N/A

Re-sanction Request

nationalgrid

Title:	RI UG Cable Repl Prog- Fdrs 79F1&F2	**Sanction Paper #:**	USSC-18-257
Project #:	C071307	**Sanction Type:**	Re-sanction
Operating Company:	The Narragansett Electric Co.	**Date of Request:**	7/3/2018
Author:	Patrick Sullivan	**Sponsor:**	Carol A. Sedewitz, VP Electric Asset Management
Utility Service:	Electricity T&D	**Project Manager:**	Patrick Sullivan

1 *Executive Summary*

This paper requests re-sanction of C071307 in the amount of $1.675M with a tolerance of +/- 10% for the purposes of full construction including underground cable replacement.

This re-sanction amount is $1.675M broken down into:

$1.363M Capex
$0.099M Opex
$0.213M Removal

NOTE the originally requested sanction amount of $0.940M

2 *Resanction Details*

2.1 Project Summary

This project will provide funding for the installation and removal of Cross Linked Polyethylene (XLPE) cables installed in the 1970s and that have been identified for replacement and removal by engineering. The project will replace cables on Camp Street, Doyle Street and a portion of Randall Street in Providence, Rhode Island.

2.2 Summary of Projects

Project Number	Project Type (Elect only)	Project Title	Estimate Amount ($M)
C071307	D-Line	RI UG Cable Repl Prog- Fdrs 79F1&F2	1.675
		Total	1.675

2.3 Prior Sanctioning History

Describe previous sanctions for the projects included in the scope of this paper (Newest to Oldest).

Date	Governance Body	Sanctioned Amount ($M)	Potential Project Investment ($M)	Sanction Type	Sanction Paper #	Potential Investment Tolerance
4/4/2016	Electronic DOA	0.940	0.940	Project	N/A	+/- 10%

Over / Under Expenditure Analysis

Summary Analysis ($M)	Capex	Opex	Removal	Total
Resanction Amount	1.363M	0.099M	0.213M	1.675M
Latest Approval	0.705M	0.140M	0.095M	0.940M
Change*	0.658M	(0.041M)	0.118M	0.735M

Change = (Re-sanction – Amount Latest Approval)

2.4 Business Plan

Business Plan Name & Period	Project included in approved Business Plan?	Over / Under Business Plan	Project Cost relative to approved Business Plan ($)
FY19-FY23 Narragansett Electric Distribution Plan	◉ Yes ○ No	○ Over ○ Under ◉ N/A	0.000M

2.5 If cost > approved Business Plan how will this be funded?

Reallocation of funds within the Rhode Island Underground Replacement program (RI UG) portfolio has been managed by Resource Planning to meet jurisdictional, budgetary, statutory and regulatory requirements.

2.6 Cost Summary Table

					Current Planning Horizon						
					Yr. 1	Yr. 2	Yr. 3	Yr. 4	Yr. 5	Yr. 6 +	
Project Number	Project Title	Project Estimate Level (%)	Spend ($M)	Prior Yrs	2018/19	2019/20	2020/21	2021/22	2022/23	2023/24	Total
C071307	RI UG Cable Repl Prog- Fdrs 79F1&F2	Est Lvl (e.g. +/- 10%)	CapEx	0.775	0.210	0.378	0.000	0.000	0.000	0.000	1.363
			OpEx	0.031	0.014	0.054	0.000	0.000	0.000	0.000	0.099
			Removal	0.059	0.046	0.108	0.000	0.000	0.000	0.000	0.213
			Total	0.865	0.270	0.540	0.000	0.000	0.000	0.000	1.675

2.7 Project Budget Summary Table

N/A

2.8 Drivers

2.8.1 Detailed Analysis Table

The following table indicates the major key variations that account for the difference between the original sanction amount and the requested resanction amount.

Detail Analysis	Over/Under Expenditure?	Amount (M's)
Replace Unusable Ducts	☒ Over ☐ Under	$0.735

2.8.2 Explanation of Key Variations

The Company discovered that the ducts on Charles Street and Randall Street are unusable and required installation of a new duct line to allow for the remaining sections of cable to be replaced. With the duct unusable, a portion of the work was completed in the areas where the duct is intact and the remaining cable replacement will follow the duct replacement scheduled for Fiscal Year 2020.

2.9 Key Milestones

Milestone	Target Date: (Month/Year)
Project Sanction	April 2016
Start Preliminary Engineering Phase I	April 2016
Engineering Design Complete- EDC- Phase I	August 2016
Construction Start Phase I	October 2017
Construction Complete- CC- Phase I	June 2018
Re-sanction	July 2018
Start Preliminary Engineering Phase II	October 2018
Engineering Design Complete- EDC- Phase II	January 2019
Construction Start Phase II	June 2019
Construction Complete- CC- Phase II	November 2019
Project Closure Sanction	February 2020

2.10 Next Planned Sanction Review

Date (Month/Year)	Purpose of Sanction Review
February 2020	Project Closure Sanction

3 *Statements of Support*

3.1 Supporters

The supporters listed have aligned their part of the business to support the project.

Department	Individual	Responsibilities
Investment Planning	DiConza, Glen	New England Distribution Electric Investment Planner
Resource Planning	Marceau, Daniel	Endorses Resources, cost estimate, schedule, and Portfolio Alignment
Asset Management	Constable, Ryan	Endorses scope, design, conformance with design standards
Distribution Design	Kevin Hellmuth	New England Distribution Design

3.2 Reviewers

The reviewers have provided feedback on the content/language of the paper

Function	Individual
Finance	Felicia Midkiff
Regulatory	Ed Turieo
Jurisdictional Delegate	Sonny Anand
Procurement	Diego Chevere

REDACTED

4 ***Decisions***

I:

(a) APPROVE this paper and the investment of $1.675M and a tolerance of +/-10%

(b) NOTE that Patrick Sullivan is the Project Manager and has the approved financial delegation.

Signature.....D H Campbell.....Date..7/6/18.....

David H. Campbell, Vice President ServCo Business Partnering, USSC Chair

REDACTED

Short Form Sanction Paper

nationalgrid

Title:	Hope #15 Flood Mitigation	**Sanction Paper #:**	USSC-18-282
Project #:	C046697	**Sanction Type:**	Sanction
Operating Company:	The Narragansett Electric Co.	**Date of Request:**	8/7/2018
Author:	Jim Hutchinson	**Sponsor:**	Carol A. Sedewitz, VP Electric Asset Management
Utility Service:	Electricity T&D	**Project Manager:**	Jim Hutchinson / Mark Phillips

1 Executive Summary

1.1 Sanctioning Summary

This paper requests sanction of C046697 in the amount of $1.541M with a tolerance of +/- 10% for the purposes of Full Implementation.

This sanction amount is $1.541M broken down into:

$1.526M Capex
$0.000M Opex
$0.015M Removal

1.2 Project Summary

This project is due to the 2010 flood with water levels reaching an elevation of 21 inches inside the control house that partially submerged the station battery and several relays at the Hope 15 station located at 15 Hope Furnace Road, Scituate, RI. The resolution is to rearrange five mechanical reclosing relays, install two new simplex panels including four new SEL351- 6 relays with reclosing function, install directional ground and directional overcurrent elements with an annunciator, and install a new outdoor battery cabinet at the Hope #15 Substation. This will allow for operation of the station during a flood inside the control house, which has reached as high as 21 inches above the control house floor in the past.

2 Project Detail

2.1 Background

This project is due to the 2010 flood with water levels reaching an elevation of 21 inches inside the control house that partially submerged the station battery and several relays at the Hope 15 station located at 15 Hope Furnace Road, Scituate, RI. This project will help make the substation flood more resilient and reliable.

2.2 *Drivers*

The Driver for this project is reliability. This project will allow for the station to maintain operation and switching capabilities in the event of another flood.

2.3 *Project Description*

This project will rearrange five mechanical reclosing relays, install two new simplex panels including four new SEL351- 6 relays with reclosing function, install directional ground and directional overcurrent elements with an annunciator, and install a new outdoor battery cabinet at the Hope #15 Substation. This will allow for operation of the station during a flood inside the control house, which has reached as high as 21 inches above the control house floor in the past.

2.4 *Benefits*

2.5 *Business & Customer Issues*

The Hope #15 Station is located directly adjacent to the Pawtuxet River in Scituate, Rhode Island and powers approximately 5,200 customers.

2.6 *Alternatives*

Alternative 1: Do Nothing:
This is not recommended because it will be leaving 5,200 customers at risk of an outage if another flood of that magnitude occurs again. With the proximity to the river and its position in the flood plane, it is likely to flood again.

2.7 *Investment Recovery*

2.7.1 Customer Impact

This project results in an indicative first full year revenue requirement when the asset is placed in service equal to approximately $0.266M.

3 Related Projects, Scoring, Budgets

3.1 *Summary of Projects*

Project Number	Project Type (Elect only)	Project Title	Estimate Amount ($M)
C046697	D-Sub	Hope #15 Flood Mitigation	1.541
		Total	1.541

3.2 *Associated Projects*

N/A

3.3 *Prior Sanctioning History*

Describe previous sanctions for the projects included in the scope of this paper (Newest to Oldest).

Date	Governance Body	Sanctioned Amount	Potential Project Investment	Sanction Type	Potential Investment Tolerance
12/31/2012	Electronic	$0.410	$1.006M	Partial	N/A

3.4 *Category*

Category	Reference to Mandate, Policy, NPV, or Other
○ Mandatory ◉ Policy- Driven ○ Justified NPV ○ Other	Asset Condition - Captial expenditure required to reduce the risk and consequences of potential failures of transmission and distribution assets, such as replacing or upgrading systems elements such as overheadlines, underground cables and substation equipment

3.5 *Asset Management Risk Score*

Asset Management Risk Score: 31

Primary Risk Score Driver: (Policy Driven Projects Only)

◉ Reliability ○ Environment ○ Health & Safety ○ Not Policy Driven

3.6 *Complexity Level*

○ High Complexity ○ Medium Complexity ◉ Low Complexity ○ N/A

Complexity Score: 14

3.7 *Next Planned Sanction Review*

Date (Month/Year)	Purpose of Sanction Review
December 2019	Project Closure Sanction

4 Financial

4.1 *Business Plan*

Business Plan Name & Period	Project included in approved Business Plan?	Over / Under Business Plan	Project Cost relative to approved Business Plan ($)
FY19-23 NE Distribution and Transmission Electric Capital Plan	◉ Yes ○ No	◉ Over ○ Under ○ NA	$0.421M

4.1.1 If cost > approved Business Plan how will this be funded?

Re-allocation of funds within the portfolio has been managed by Resource Planning to meet jurisdictional budgetary, statutory, and regulatory requirements.

4.2 *CIAC / Reimbursement*

N/A

4.3 *Cost Summary Table*

					Current Planning Horizon ($M)						
					Yr. 1	Yr. 2	Yr. 3	Yr. 4	Yr. 5	Yr. 6 +	
Project Number	Project Title	Project Estimate Level (%)	Spend	Prior Yrs	2018/19	2019/20	2020/21	2021/22	2022/23	2023/24	Total
C046697	Hope 15 Flood Mitigation	Est Lvl (e.g. +/- 10%)	CapEx	0.323	0.200	1.003	-	-	-	-	1.526
			OpEx	-	-	-	-	-	-	-	-
			Removal	-	-	0.015	-	-	-	-	0.015
			Total	0.323	0.200	1.018	-	-	-	-	1.541

4.4 *Project Budget Summary Table*

Project Costs Per Business Plan

		Current Planning Horizon ($M)						
		Yr. 1	Yr. 2	Yr. 3	Yr. 4	Yr. 5	Yr. 6 +	
$M		2018/19	2019/20	2020/21	2021/22	2022/23	2023/24	Total
CapEx		0.000	0.738	0.000	0.000	0.000	0.000	0.738
OpEx		0.000	0.015	0.000	0.000	0.000	0.000	0.015
Removal		0.000	0.052	0.000	0.000	0.000	0.000	0.052
Total Cost in Bus. Plan		0.000	0.805	0.000	0.000	0.000	0.000	0.805

Variance (Business Plan-Project Estimate)

		Current Planning Horizon ($M)						
		Yr. 1	Yr. 2	Yr. 3	Yr. 4	Yr. 5	Yr. 6 +	
$M		2018/19	2019/20	2020/21	2021/22	2022/23	2023/24	Total
CapEx		(0.200)	(0.265)	0.000	0.000	0.000	0.000	(0.465)
OpEx		0.000	0.015	0.000	0.000	0.000	0.000	0.015
Removal		0.000	0.037	0.000	0.000	0.000	0.000	0.037
Total Cost in Bus. Plan		(0.200)	(0.213)	0.000	0.000	0.000	0.000	(0.413)

5 Key Milestones

Milestone	Target Date: (Month/Year)
Engineering Design Complete - EDC	November 2017
Project Sanction	August 2018
Construction Start	February 2019
Ready for Load/Use	August 2019
Construction Complete - CC	August 2019
Project Closure Sanction	December 2019

6 Climate Change

Contribution to National Grid's 2050 80% emissions reduction target:	◉ Neutral	○ Positive	○ Negative
Impact on adaptability of network for future climate change:	○ Neutral	◉ Positive	○ Negative

7 Statements of Support

7.1.1 Supporters

The supporters listed have aligned their part of the business to support the project.

Department	Individual	Responsibilities
Investment Planning	DiConza, Glen	Endorses relative to 5-year business plan or emergent work
Resource Planning	Phillips, Mark	Endorses construction resources, cost estimate, schedule, and portfolio alignment
Asset Management / Planning	Constable, Ryan	Endorses scope, estimate, and schedule with the company's goals, strategies, and objectives
Engineering and Design	Larrabee, Mark	Endorses scope, design, conformance with design standards
Electric Project Estimation	Duffy, John	Endorses Cost Estimate

7.1.2 Reviewers

The reviewers have provided feedback on the content/language of the paper.

Function	Individual
Finance	Midkiff, Felicia
Regulatory	Turieo, Ed
Jurisdictional Delegate(s)	Easterly, Patricia
Procurement	Chevere, Diego
Control Centers (CC)	Gallagher, Michael

7.1.3 List References

N/A

REDACTED

8 Decisions

I :

(a) APPROVE this paper and the investment of $1.541M and a tolerance of +/-10%

(b) NOTE that Jim Hutchinson is the Project Manager and Mark Phillips has the approved financial delegation.

Signature..... Date.8/13/18.....

David H. Campbell, Vice President ServCo Business Partnering, USSC Chair

9 Other Appendices

N/A

9.1 *Sanction Request Breakdown by Project*

N/A

Short Form Sanction Paper

Title:	RI VVO/CVR Expansion: NasonVille 127, Dexter 36	**Sanction Paper #:**	USSC-18-298
Project #:	C080895, C080896, C080899, C080900	**Sanction Type:**	Partial Sanction
Operating Company:	The Narragansett Electric Co.	**Date of Request:**	9/25/2018
Author:	Gregory Bruton	**Sponsor:**	Carol A. Sedewitz, VP Distribution Asset Management & Planning
Utility Service:	Electricity T&D	**Project Manager:**	Michael Hughes

1 Executive Summary

1.1 *Sanctioning Summary*

This paper requests partial sanction of C080895, C080896, C080899, C080900 in the amount of $0.173M with a tolerance of +/- 10% for the purposes of engineering two (2) substations and the 7 substation feeders. This is an expansion of the technology demonstrated as part of the RI VVO/CVR Pilot.

This sanction amount is $0.173M broken down into:

$0.139M Capex
$0.024M Opex
$0.010M Removal

This project has undergone a Capital Efficiency Review with the following determination:

This project already incorporated capital efficiency initiatives for Volt-VAR Optimization and Conservative Voltage Reduction in its final design. The project was already re-baselined in the five-year investment plan to reflect efficiency savings of $0.049M as compared to the amount previously in the plan. The sanction amount reflects these efficiency savings; however, there are no savings relative to the re-baselined amount in the five-year plan.

NOTE the potential investment of $1.706M with a tolerance of +/- 25%, contingent upon submittal and approval of a Project Sanction paper following completion of preliminary engineering, and design.

1.2 *Project Summary*

This sanction is for engineering of two (2) substations and 7 feeders within the total scope of the VVO/CVR expansion in FY20. The work comprised for FY20 includes the installation and implementation of VVO/CVR within the same fiscal year. The noted substations/feeder sets that will have VVO/CVR technology deployed on them will be determined by the Grid Modernization Execution Group and Distribution Planning and Asset Management. Their collaboration is to ensure VVO/CVR deployment on the selected stations/feeder sets are implemented under the following conditions: implementation will maximize the value of the technology; implementation will be applied to distribution areas which have recently undergone study and were not identified for major infrastructure changes.

National Grid will build upon the infrastructure deployed during the Rhode Island VVO/CVR Pilot to cost effectively deploy the technology to high value substations in the service territory as an expansion project. The third year of this expansion includes 2 substations in the service territory. [redacted] For this expansion, existing substation and distribution device locations will be retrofitted with advanced control and communications. The project estimates a 3% reduction in demand and energy usage for the 12k customers in the project area of the 7 feeders.

2 ***Project Detail***

2.1 ***Background***

Advanced Volt VAR Optimization and Conservation Voltage Reduction (VVO/CVR) is a program where centralized, coordinated control is deployed to manage existing distribution assets with the intent of better optimizing the performance of the system, and deliver energy at a voltage which results in peak efficiency for the customer- saving the customer an estimated 3% on their energy and demand charges. This technology also provides the Company's internal groups with more granular information on distribution asset performance and operations with real time distribution information.

Advanced VVO/CVR technology was first proposed as part of the Infrastructure, Safety, and Reliability (ISR) process in December of 2012 (Docket 4382). At that time, the Public Utilities Commission approved a year of conceptual design and engineering analysis. In December of 2013, the pilot scope was proposed (Docket 4473), which included two target areas: 3 feeders out of the Putnam Pike substation, and 4 feeders out of the Tower Hill Substation. Construction began on the pilot in July of 2014, and was completed in March of 2017. Two of the seven total project feeders have been operational since March 2016, and have been used to provide quantifiable performance metrics. The pilot was extremely useful in a few key ways.

- Established a centralized controller, with expandable capability, which was networked into the Company Energy Management System (EMS)/Supervisory Control and Data Acquisition (SCADA) system.
- Refined the approach taken for communicating with distribution devices to optimize cost of installation and ownership.
- Optimized the interaction and management that would be provided to EMS to avoid nuisance alarms and onerous operating resources.

This expansion proposal leverages these learnings and infrastructure to further deploy the technology in an improved cost efficient manner over the pilot. This paper seeks to deploy this technology on the Dexter and Nasonville substations and their associated feeders.

2.2 *Drivers*

National Grid views this expansion of VVO/CVR as advancing its US Connect21 Strategy, which seeks to transform National Grid's electricity and natural gas networks to support the 21st century digital economy with smarter, cleaner, and more resilient energy solutions. This expansion supports many of the Connect21 goals, particularly investing to grow and modernize the system, but also ensuring safety/compliance and reliability.

Deploying this technology will further refine the strategy that will ultimately be incorporated into these proposals. Moreover, this technology will provide the Company with greater visibility into the real time operation of the local distribution system.

2.3 *Project Description*

Scope:
The project has selected the following substations for the technology deployment in FY20.

Customers	Substation	Feeders	Sub Transformers	Est New VVO Caps	VVO Rdy Caps	Line Voltage Monitors (LVM)
4,560	Nasonville 127	3	1	13	7	3
7,734	Dexter 36	4	1	14	2	4

This project will include modifying the substation regulator control/Line Tap Changers (LTCs) to allow remote data access from the VVO/CVR Server. 27 new advanced switching capacitors will be installed, and 9 existing switchable capacitors will be

retrofitted with an advanced controller. Finally 7 end-of-line voltage monitors will be deployed.

The costs used for this project are developed from the actuals of the device installs of the VVO/CVR Pilot, deployed during FY15/16. As these expansion projects progress, these actual costs will be refined to represent improved deployment efficiencies.

The selection of these substations was created by examining the estimated cost to deploy a VVO/CVR system, as well as the projected benefits yielded. This was then dovetailed with Distribution Planning to select high value areas which also have recently undergone a planning study, to ensure the solution will be deployed to maximize the useful life without modification.

2.4 *Benefits*

Customer Benefits

The Customers in the areas identified will benefit from the deployment of this technology in several ways. The most significant will be the reduction of peak demand and energy usage, resulting in lower bills. From the Company's pilot work, an estimated 3% reduction is anticipated. The program has an estimated a 15 year benefit-cost ratio greater than 3.

Company Benefits

This proposal will also include EMS integration of the key operating parameters for distribution devices in the target project area. Real time interval data from these devices will provide increased visibility into system performance, outage management, and more accurate planning. These benefits are not quantified in this paper.

The demand and energy reductions will incrementally reduce the Company's capacity cost, as well as energy procurement costs.

2.5 *Business & Customer Issues*

The VVO/CVR technology proposed will integrate into the Company's existing distribution system and not introduce an impact to customers on the affected feeders. As the Company will now be monitoring key points of the distribution system in real-time, we expect an overall reduction in the voltage variation provided to customers. While lowering the voltage does impact the operating efficiency of some customers devices, the impact is so slight that it is generally impercievable. The technology will improve our operational voltage profile by adaptively controlling voltage and VAR regulating devices in response to system demand changes in real time. This happens without customer involvement.

The core control technology is provided by Utilidata, a local business in Rhode Island. Utilidata was selected through an open competitive procurement process for this project. As part of the expansion project, licenses of their software were purchased in bulk, and will be deployed each year on the expansion projects.

2.6 *Alternatives*

Alternative 1: "Do Nothing"

The Company could "Do Nothing" in this area, and not pursue VVO/CVR control of the distribution system. This approach is not recommended for several reasons:

1. A significant amount of infrastructure was installed during the pilot, which can be leveraged to deploy this technology in a cost effective manner.
2. The Company will benefit from a significant increase in operational awareness through real time monitoring of distribution device locations. This will help in unquantified ways during storm restoration, planning, and operation of these areas.
3. VVO/CVR investment is part of "grid modernization" proposals and demonstrations in other service territories.

2.7 *Investment Recovery*

Investment recovery will be through standard rate recovery mechanisms.

2.7.1 Customer Impact

This project results in an indicative first full year revenue requirement when the asset is placed in service equal to approximately $0.258M.

3 Related Projects, Scoring, Budgets

3.1 *Summary of Projects*

Project Number	Project Type (Elec only)	Project Title	Estimate Amount ($M)
C080895	D-Line	RI VVO/CVR Expansion - Nasonville 127, Distribution	0.656
C080896	D-Line	RI VVO/CVR Expansion - Dexter 36, Distribution	0.645
C080899	D-Sub	RI VVO/CVR Expansion - Nasonville 127, Substation	0.203
C080900	D-Sub	RI VVO/CVR Expansion - Dexter 36, Substation	0.202
		Total	1.706

3.2 *Associated Projects*

Project Number	Project Title	Estimate Amount ($M)
C080894	RI VVO/CVR Expansion - Farnum Pike 23, Distribution	$ 0.880
C080897	RI VVO/CVR Expansion - Pontiac 27 , Distribution	$ 0.633
C080898	RI VVO/CVR Expansion - Farnum Pike 23, Substation	$ 0.404
C080901	RI VVO/CVR Expansion - Pontiac 27, Substation	$ 0.654
	Total	2.572

3.3 *Prior Sanctioning History*

N/A

3.1 *Category*

Category	Reference to Mandate, Policy, NPV, or Other
○ Mandatory ◉ Policy- Driven ○ Justified NPV ○ Other	Docket No. 4592 - National Grid's Electric Infrastructure, Safety, and Reliability (ISR) Plan for FY 2017 (filed 12/9/15)

3.2 *Asset Management Risk Score*

Asset Management Risk Score: 21

Primary Risk Score Driver: (Policy Driven Projects Only)

◉ Reliability ○ Environment ○ Health & Safety ○ Not Policy Driven

3.3 *Complexity Level*

○ High Complexity ◉ Medium Complexity ○ Low Complexity ○ N/A

Complexity Score: 20

3.4 *Next Planned Sanction Review*

Date (Month/Year)	Purpose of Sanction Review
April 2019	Project Sanction

4 Financial

4.1 *Business Plan*

Business Plan Name & Period	Project included in approved Business Plan?	Over / Under Business Plan	Project Cost relative to approved Business Plan ($M)
FY19-23 NE Distribution & Transmission Capital Plan (1.8M/Year)	◉ Yes ○ No	○ Over ○ Under ◉ NA	0.00

4.1.1 If cost > approved Business Plan how will this be funded?

Re-allocation of funds within the portfolio has been managed and approved by Resource Planning to meet jurisdictional budgetary, statutory and regulatory requirements.

4.2 *CIAC / Reimbursement*

N/A

4.3 *Cost Summary Table*

Project Number	Project Title	Project Estimate Level (%)	Spend	Prior Yrs	Current Planning Horizon ($M) Yr. 1 2018/19	Yr. 2 2019/20	Yr. 3 2020/21	Yr. 4 2021/22	Yr. 5 2022/23	Yr. 6 + 2023/24	Total
C080895	RI VVO/CVR Expansion - Nasonville 127, Distribution	Est Lvl (e.g. +/- 10%)	CapEx	-	0.053	0.474	-	-	-	-	0.527
			OpEx	-	0.010	0.090	-	-	-	-	0.100
			Removal	-	0.003	0.025	-	-	-	-	0.028
			Total	-	0.066	0.589	-	-	-	-	0.655
C080896	RI VVO/CVR Expansion - Dexter 36, Distribution	Est Lvl (e.g. +/- 10%)	CapEx	-	0.055	0.495	-	-	-	-	0.550
			OpEx	-	0.007	0.061	-	-	-	-	0.068
			Removal	-	0.003	0.024	-	-	-	-	0.027
			Total	-	0.065	0.580	-	-	-	-	0.645
C080899	RI VVO/CVR Expansion - Nasonville 127, Substation	Est Lvl (e.g. +/- 10%)	CapEx	-	0.016	0.142	-	-	-	-	0.158
			OpEx	-	0.004	0.033	-	-	-	-	0.037
			Removal	-	0.001	0.007	-	-	-	-	0.008
			Total	-	0.021	0.182	-	-	-	-	0.203
C080900	RI VVO/CVR Expansion - Dexter 36, Substation	Est Lvl (e.g. +/- 10%)	CapEx	-	0.016	0.142	-	-	-	-	0.158
			OpEx	-	0.004	0.033	-	-	-	-	0.037
			Removal	-	0.001	0.007	-	-	-	-	0.008
			Total	-	0.021	0.182	-	-	-	-	0.203
Total Project Sanction			CapEx	-	0.140	1.253	-	-	-	-	1.393
			OpEx	-	0.025	0.217	-	-	-	-	0.242
			Removal	-	0.008	0.063	-	-	-	-	0.071
			Total	-	0.173	1.533	-	-	-	-	1.706

4.4 *Project Budget Summary Table*

Project Costs per Business Plan

$M		Current Planning Horizon ($M) Yr. 1 2018/19	Yr. 2 2019/20	Yr. 3 2020/21	Yr. 4 2021/22	Yr. 5 2022/23	Yr. 6 + 2023/24	Total
CapEx		0.140	1.253	0.000	0.000	0.000	0.000	1.393
OpEx		0.025	0.217	0.000	0.000	0.000	0.000	0.242
Removal		0.008	0.063	0.000	0.000	0.000	0.000	0.071
Total Cost in Bus. Plan		0.173	1.533	0.000	0.000	0.000	0.000	1.706

Variance (Business Plan-Project Estimate)

$M		Current Planning Horizon ($M) Yr. 1 2018/19	Yr. 2 2019/20	Yr. 3 2020/21	Yr. 4 2021/22	Yr. 5 2022/23	Yr. 6 + 2023/24	Total
CapEx		0.000	0.000	0.000	0.000	0.000	0.000	0.000
OpEx		0.000	0.000	0.000	0.000	0.000	0.000	0.000
Removal		0.000	0.000	0.000	0.000	0.000	0.000	0.000
Total Cost in Bus. Plan		0.000	0.000	0.000	0.000	0.000	0.000	0.000

Project Costs Per Business Plan

		Current Planning Horizon ($M)						
		Yr. 1	Yr. 2	Yr. 3	Yr. 4	Yr. 5	Yr. 6 +	
$M		2018/19	2019/20	2020/21	2021/22	2022/23	2023/24	Total
CapEx		0.000	0.000	0.000	0.000	0.000	0.000	0.000
OpEx		0.000	0.000	0.000	0.000	0.000	0.000	0.000
Removal		0.000	0.000	0.000	0.000	0.000	0.000	0.000
Total Cost in Bus. Plan		0.000	0.000	0.000	0.000	0.000	0.000	0.000

Variance (Business Plan-Project Estimate)

		Current Planning Horizon ($M)						
		Yr. 1	Yr. 2	Yr. 3	Yr. 4	Yr. 5	Yr. 6 +	
$M		2018/19	2019/20	2020/21	2021/22	2022/23	2023/24	Total
CapEx		(0.140)	(1.253)	0.000	0.000	0.000	0.000	(1.393)
OpEx		(0.025)	(0.217)	0.000	0.000	0.000	0.000	(0.242)
Removal		(0.008)	(0.063)	0.000	0.000	0.000	0.000	(0.071)
Total Cost in Bus. Plan		(0.173)	(1.533)	0.000	0.000	0.000	0.000	(1.706)

5 *Key Milestones*

Milestone	**Target Date: (Month/Year)**
Partial Sanction	September 2018
Project Sanction	April 2019
Construction Start	June 2019
Construction Complete - CC	September 2019
Ready for Load/Use	December 2019
Project Closure Sanction	March 2020

6 *Climate Change*

Contribution to National Grid's 2050 80% emissions reduction target:	◉ Neutral	○ Positive	○ Negative
Impact on adaptability of network for future climate change:	◉ Neutral	○ Positive	○ Negative

7 Statements of Support

7.1.1 Supporters

The supporters listed have aligned their part of the business to support the project.

Department	Individual	Responsibilities
Investment Planning	DiConza, Glen	Endorses relative to 5-year business plan or emergent work
Long Term Resource Planning	Stelling, Danielle	Reviewing milestone dates for synchronization with cash flows in order to move projects out of Step 0
Resource Planning	Phillips, Mark Wyman, Anne	Endorses construction resources, cost estimate, schedule, and portfolio alignment
Asset Management / Planning	Labarre, Al	Endorses scope, estimate, and schedule with the Company's goals, strategies, and objectives
Engineering & Design	Hellmuth, Kevin / Swanson, Leonard G. / Larrabee, Mark	Endorses scope, design, conformance with design standards
Project Management	Arthur, Dave / Migdal, Sara	Endorses resources, cost estimate, schedule
Electric Project Estimation	Duffy, John	Endorses Cost Estimate
Customer Innovation	Dagher, Fouad	Endorses Technology

7.1.2 Reviewers

The reviewers have provided feedback on the content/language of the paper.

Function	Individual
Finance	Midkiff, Felicia
Regulatory	Turieo, Ed
Jurisdictional Delegate	Easterly, Patricia
Procurement	Chevere, Diego
Control Centers (CC)	Gallagher, Michael

7.1.3 List References

1	Network Solutions – Rhode Island VVO/CVR Expansion White Paper

REDACTED

8 Decisions

I:

(a) APPROVE the investment of $0.173M and a tolerance of +/- 10% for preliminary engineering, design, long lead time material, and initial construction activities.

(b) NOTE the potential investment of $1.706M and a tolerance of +/-25%, contingent upon submittal and approval of a Project Sanction paper following completion of final engineering and design.

(c) NOTE that Michael Hughes is the Project Manager and has the approved financial delegation to undertake the activities stated in (a).

Signature..... Date 10/24/18

David H. Campbell, Vice President ServCo Business Partnering, USSC Chair

9 Other Appendices

9.1 Sanction Request Breakdown by Project

$M	C080895	C080896	C080899	C080900	Total
CapEx	0.053	0.055	0.016	0.016	0.139
OpEx	0.010	0.007	0.004	0.004	0.024
Removal	0.003	0.003	0.002	0.002	0.010
Total	0.066	0.065	0.021	0.021	0.173

Short Form Sanction Paper

nationalgrid

Title:	[redacted] DG Interconnection	**Sanction Paper #:**	USSC-18-303
Project #:	C080679 & C079116	**Sanction Type:**	Sanction
Operating Company:	The Narragansett Electric Co.	**Date of Request:**	10/2/2018
Author:	Xiaoguang (Shirley) Wang	**Sponsor:**	Carol A. Sedewitz, VP Electric Asset Management
Utility Service:	Electricity T&D	**Project Manager:**	Vahram Dolukhanyan

1 Executive Summary

1.1 *Sanctioning Summary*

This paper requests sanction of Project Funding Number C080679 & C079116 in the amount of $5.495M with a tolerance of +/- 10% for the purposes of full implementation.

This sanction amount is $5.495M broken down into:
$4.939M Capex
$0.387M Opex
$0.169M Removal

With a CIAC/Reimbursement of $5.495M

This project has undergone a Capital Efficiency Review with the following determination:

This project is in final design and/or has secured the necessary agency approvals to proceed and is ready to be released for construction. At this stage, re-evaluation of the project design would likely result in significant delays to the project schedule and an increase in cost.

1.2 *Project Summary*

[redacted] is a customer requesting interconnection of a 31.34 MW solar generation facility [redacted] in West Greenwich, RI. To satisfy the customer's request, this project will extend the 34kV 3311 circuit approximately 7.5 miles from the intersection of Hopkins Hill Rd and Division Rd in Exeter, RI to the site.

2 Project Detail

2.1 Background

[redacted] is a customer requesting interconnection of a 31.34 MW solar generation facility [redacted] in West Greenwich, RI. This site consists of four applications: three 8 MW sites, and one 7.34 MW site. All four sites are adjacent to one another. The customer is targeting an in service date by the end of 2019 to take advantage of state and federal incentives.

National Grid's existing 12.47 kV distribution system facilities suppliying the area do not have sufficient capacity for interconnection of the proposed 31.34 MW site

2.2 Drivers

This customer has requested interconnection of a 31.34 MW Distributed Generation("DG") facility under the Company's Standards for Connecting Distributed Generation tariff, R.I.P.U.C. No. 2163.

2.3 Project Description

[redacted]

2.4 *Benefits*

This customer has requested Distributed Generation service under the Company's Standards for Connecting Distributed Generation tariff, R.I.P.U.C. No. 2163. The Company is providing service to the customer while mitigating any issues that the DG would cause to other customers.

2.5 *Business & Customer Issues*

Extending the 3311 feeder to the customer site requires crossing I-95. National Grid has coordinated with the RI-Department of Transportation to ensure that their ongoing [redacted] rebuild includes the necessary conduits to support the proposed UG work in this area.

2.6 *Alternatives*

Alternative 1: Extend the 3311 and 3310 Circuits.
Serve the generation via two 34.5kV circuits, the 3311 and 3310. This would require extension of the 3311 over the same 7.5 mile distance, but would allow the use of 477 Aluminum Spacer, a smaller/lighter conductor. This would also require extension of the 3310 along the same route, which would require triple-circuiting with the 3311 and the 63F6 circuits .

This option had higher costs and more risks than the chosen option, and was therefore not chosen by the customer.

Alternative 2: Defer/Do Nothing
This would not satisfy the customer's requested Distributed Generation service under the Company's tariff, R.I.P.U.C. No. 2163. Therefore, doing nothing is not a viable option.

2.7 *Investment Recovery*

Investment will be collected from the customer through a contribution in aid of construction ("CIAC")

2.7.1 Customer Impact

This project is subject to a full CIAC and will have no rate impact on other customers.

3 Related Projects, Scoring, Budgets

3.1 *Summary of Projects*

Project Number	Project Type (Elec only)	Project Title	Estimate Amount ($M)
C079116	Distribution Line	[redacted] 31MW DG Interconnection-Non-customer site	5.048
C080679	Distribution Line	[redacted] 31MW DG Interconnection-Customer site	0.447
		Total	5.495

3.2 *Associated Projects*

There are no associated projects.

3.3 *Prior Sanctioning History*

None.

3.4 *Category*

Category	Reference to Mandate, Policy, NPV, or Other
◉ Mandatory ○ Policy- Driven ○ Justified NPV ○ Other	This is a distributed generation interconnection project being delivered under The Narragansett Electric Company Standards for Connecting Distributed Generation tariff, RIPUC No. 2163.

3.5 *Asset Management Risk Score*

Asset Management Risk Score: 49

Primary Risk Score Driver: (Policy Driven Projects Only)

○ Reliability ○ Environment ○ Health & Safety ◉ Not Policy Driven

3.6 *Complexity Level*

○ High Complexity ◉ Medium Complexity ○ Low Complexity ○ N/A

Complexity Score: 20

3.7 *Next Planned Sanction Review*

Date (Month/Year)	Purpose of Sanction Review
December 2019	Project Closure Sanction

4 Financial

4.1 *Business Plan*

Business Plan Name & Period	Project included in approved Business Plan?	Over / Under Business Plan	Project Cost relative to approved Business Plan ($)
FY19-FY23 Budget File- New England Distribution and Sub-Transmission	○ Yes ◉ No	◉ Over ○ Under ○ NA	$5.495M

4.1.1 If cost > approved Business Plan how will this be funded?

Re-allocation of funds within the portfolio has been managed by Resource Planning to meet jurisdictional budgetary, statutory and regulatory requirements.

4.2 *CIAC / Reimbursement*

$M	Prior Yrs	Yr. 1 2018/19	Yr. 2 2019/20	Yr. 3 2020/21	Yr. 4 2021/22	Yr. 5 2022/23	Yr. 6 + 2023/24	Total
CIAC/Reimbursement	0.000	5.495	0.000	0.000	0.000	0.000	0.000	5.495

4.3 *Cost Summary Table*

Project Number	Project Title	Project Estimate Level (%)	Spend	Prior Yrs	Current Planning Horizon ($M) Yr. 1 2018/19	Yr. 2 2019/20	Yr. 3 2020/21	Yr. 4 2021/22	Yr. 5 2022/23	Yr. 6 + 2023/24	Total
C079116	[redacted] 31MW DG Interconnection-Non-customer site	+/-10%	CapEx	-	0.775	3.717	-	-	-	-	4.492
			OpEx	-	-	0.387	-	-	-	-	0.387
			Removal	-	-	0.169	-	-	-	-	0.169
			Total	-	0.775	4.273	-	-	-	-	5.048
C080679	[redacted] 31MW DG Interconnection-Customer site	+/-10%	CapEx	-	0.031	0.416	-	-	-	-	0.447
			OpEx	-	-	-	-	-	-	-	-
			Removal	-	-	-	-	-	-	-	-
			Total	-	0.031	0.416	-	-	-	-	0.447
Total Project Sanction			CapEx	-	0.806	4.133	-	-	-	-	4.939
			OpEx	-	-	0.387	-	-	-	-	0.387
			Removal	-	-	0.169	-	-	-	-	0.169
			Total	-	0.806	4.689	-	-	-	-	5.495

4.4 *Project Budget Summary Table*

Project Costs Per Business Plan

	Current Planning Horizon ($M) Yr. 1	Yr. 2	Yr. 3	Yr. 4	Yr. 5	Yr. 6 +	
$M	2018/19	2019/20	2020/21	2021/22	2022/23	2023/24	Total
CapEx	0.000	0.000	0.000	0.000	0.000	0.000	0.000
OpEx	0.000	0.000	0.000	0.000	0.000	0.000	0.000
Removal	0.000	0.000	0.000	0.000	0.000	0.000	0.000
Total Cost in Bus. Plan	0.000	0.000	0.000	0.000	0.000	0.000	0.000

Variance (Business Plan-Project Estimate)

	Current Planning Horizon ($M) Yr. 1	Yr. 2	Yr. 3	Yr. 4	Yr. 5	Yr. 6 +	
$M	2018/19	2019/20	2020/21	2021/22	2022/23	2023/24	Total
CapEx	(0.806)	(4.133)	0.000	0.000	0.000	0.000	(4.939)
OpEx	0.000	(0.387)	0.000	0.000	0.000	0.000	(0.387)
Removal	0.000	(0.169)	0.000	0.000	0.000	0.000	(0.169)
Total Cost in Bus. Plan	(0.806)	(4.689)	0.000	0.000	0.000	0.000	(5.495)

5 *Key Milestones*

Milestone	**Target Date: (Month/Year)**
Project Sanction	October 2018
Engineering Design Complete - EDC	November 2018
Gate C1	December 2018
Construction Start	January 2019
Construction Complete - CC	September 2019
Ready for Load/Use	October 2019
Gate D	November 2019
Project Closure Sanction	December 2019
Gate E	January 2020

6 Climate Change

Contribution to National Grid's 2050 80% emissions reduction target:	◉ Neutral	○ Positive	○ Negative
Impact on adaptability of network for future climate change:	◉ Neutral	○ Positive	○ Negative

7 Statements of Support

7.1.1 Supporters

The supporters listed have aligned their part of the business to support the project.

Department	Individual	Responsibilities
Investment Planning	DiConza, Glen	Endorses relative to 5-year business plan or emergent work
Long Term Resource Planning	Stelling, Danielle	Reviewing milestone dates for synchronization with cash flows in order to move projects out of Step
Resource Planning	Wyman, Anne	Endorses construction resources, cost estimate, schedule, and portfolio alignment
Asset Management / Planning	Labarre, Al	Endorses scope, estimate, and schedule with the company's goals, strategies, and objectives
Engineering and Design	Hellmuth, Kevin	Endorses scope, design, conformance with design standards
Project Management	Arthur, Dave	Endorses resources, cost estimate, schedule
Electric Project Estimation	Duffy, John	Endorses Cost Estimate

7.1.2 Reviewers

The reviewers have provided feedback on the content/language of the paper.

Function	Individual
Finance	Midkiff, Felicia
Regulatory	Turieo, Ed
Jurisdictional Delegate(s)	Easterly, Patricia
Procurement	Chevere, Diego
Control Centers (CC)	Gallagher, Michael

7.1.3 List References

N/A

8 Decisions

I:

(a) APPROVE this paper and the investment of $5.495M.

(b) NOTE that Vahram Dolukhanyan is the Project Manager and has the approved financial delegation.

Signature.....D H. Campbell.....Date..10/9/18...

David H. Campbell, Vice President ServCo Business Partnering, USSC Chair

9 Other Appendices

9.1 *Sanction Request Breakdown by Project*

Project Funding Number C080679 sanction amount is $0.447M, broken down into:

$0.447M Capex
$0.000M Opex
$0.000M Removal

Project Funding Number C079116 sanction amount is $5.048M, broken down into:

$4.492M Capex
$0.387M Opex
$0.169M Removal

REDACTED

Change in DOA Request Form (Less than Million)

Version 9.5

Note: Fill data in the grey area and upload the form to the Electric Investment Planning SharePoint Site which will automatically route the form for review / approval.

Electric - Janice Flynn

Gas - Karen Jasinowski SharePoint Site Link

*Date:	9/12/2018
*Operating Company:	The Narragansett Electric Co.
*PowerPlant Project #:	C079116
*Project Name:	[redacted] 31MW DG Interconnection
*Project Engineer:	David Evans
*Project/Program Manager:	Xiaoguang (Shirley) Wang
*DoA Type:	Re-Sanction

Latest Project Estimate

*Date of Latest Sanction:	9/8/2017

Total	Capex	Opex	Removal
$15,000	$15,000		

Revised Project Estimate

Total	Capex	Opex	Removal
$250,000	$250,000		

Cash Flows

Previous FY	Capex	Opex	Removal
$16,776	$16,776		

Current FY	Capex	Opex	Removal
$233,224	$233,224		

FY+1	Capex	Opex	Removal
$0			

FY+2	Capex	Opex	Removal
$0			

Customer Contribution

Reason for Revision

☑	Revised forecast either exceeds or is lower than the Approved Amount - Project Still In Process
	New Project Estimated Completion Date: 9/12/2018
☐	Actual Spending either exceeds or is lower than the Approved Amount – Project is Complete

The below information is required and must be filled in and a Driver must be selected:

	Reason for Change in Spend
Other	This is distribution interconnection job, the customer only pays $15000 in study phase, but due to the compact schedule, Distribution Asset Management proceed the final design ahead of the customer's payment.
	Justification / Risk Identification
	ISA has been signed and first payment is pending.
	New / Changed Project Scope (Material, Labor or Other)

Change in DOA Request Form (Less than Million)

	N/A
	Project Alternatives Considered
	N/A
	Additional Notes
	Full sanction paper is drafted and will be sumbitted soon.

In-service Dates

*Original In-service Date:	8/1/2018
*Revised In-service Date:	10/1/2019

REDACTED

Short Form Sanction Paper

nationalgrid

Title:	Franklin Square Circuit Breaker Replacement	**Sanction Paper #:**	USSC-18-331
Project #:	C081006	**Sanction Type:**	Sanction
Operating Company:	The Narragansett Electric Co.	**Date of Request:**	11/27/2018
Author:	Robert Pendrake	**Sponsor:**	Carol A. Sedewitz, VP Distribution Asset Management & Planning
Utility Service:	Electricity T&D	**Project Manager:**	Banafsheh Tofigh

1 Executive Summary

1.1 *Sanctioning Summary*

This paper requests sanction of C081006 in the amount of $4.550M with a tolerance of +/- 10% for the purposes of full implementation.

This sanction amount is $4.550M broken down into:
$4.316M Capex
$0.000M Opex
$0.234M Removal

This project has undergone a Capital Efficiency Review with the following determination:

This project reflects mature designs and efficiencies that are now accepted as a standard. The sanction amount reflects these efficiency savings; however, there are no further incremental savings relative to the sanction amount.

1.2 *Project Summary*

The project will replace twenty-six (26) circuit breakers at the Franklin Square #11 substation in Providence due to asset condition. The breakers are obsolete (1938 vintage), lack spare parts, are slow to operate and are unreliable. Aditionally, replacement of these breakers is necessary to support ongoing expansion and system improvement work in the area.

2 Project Detail

2.1 Background

The twenty-six (26) 11 kV circuit breakers at the Franklin Square #11 Substation are comprised of General Electric (GE) Type FH oil-filled circuit breakers and GE Type ARA air-blast units. The GE Type FH breakers are obsolete and slow to operate at 180 ms compared to a modern 5-cycle breaker at approximately 80 ms. They have deteriorated and aged insulation and parts. They were manufactured in 1938 (80 yrs old). This breaker family is being targeted for replacement under the approved Circuit Breaker and Recloser Asset Replacement Program (ARP). Seventeen (17) have been replaced since 2017.

The GE Type ARA breakers are of an obsolete design. In addition, two of these units recently failed and were replaced as a damage/failure project. The breaker failed to operate and further investigation indicated structural cracks in the mechanism. Two similar units other positions displayed the same issue and both were immediately replaced under damage/failure.

2.2 Drivers

Asset condition is the primary driver for this project and non wires is not an alternative. The breakers are obsolete, unreliable and have a high probability of failure. As system improvements and customer expansions are underway, this project is in-line with the company goals in this area.

2.3 Project Description

The project will replace twenty-six (26) circuit breakers at Franklin Square #11 substation in Providence, RI that are comprised of GE Type ARA air-blast and GE FH oil-filled design.

2.4 Benefits

Replacement of these breakers will assist with providing reliable service to the Companie's customers in the area. It will also enhance the expansion and system improvement projects that are ongoing in the area as Franklin Square Substation provides the 11 kV supply to South Street Substation, [redacted]

2.5 *Business & Customer Issues*

Since these investments are designed for system improvements, they do not require a CIAC. There are no business or customer issues other than those already stated in this paper.

2.6 *Alternatives*

Alternative 1: Deferment

Deferment or do nothing is not recommended as the breakers have a high probability of failure, are obsolete, lack spare parts and manufacture support, are deteriorate and aged, and are slow to operate. Deferment or do nothing may result in interrupted service to a large amount of critical customers which would adversely affect the Company's reputation.

2.7 *Investment Recovery*

2.7.1 Customer Impact

This project results in an indicative first full year revenue requirement when the asset is placed in service equal to approximately $0.798M.

3 Related Projects, Scoring, Budgets

3.1 *Summary of Projects*

Project Number	Project Type (Elec only)	Project Title	Estimate Amount ($M)
C081006	D-Sub	Franklin Sq Breakers Fy19-FY23	4.550
		Total	4.550

3.2 *Associated Projects*

N/A

3.3 *Prior Sanctioning History*

N/A

3.4 *Category*

Category	Reference to Mandate, Policy, NPV, or Other
○ Mandatory	
◉ Policy- Driven	Substation Circuit Breaker & Recloser Strategy, 2009
○ Justified NPV	
○ Other	

3.5 *Asset Management Risk Score*

Asset Management Risk Score: _39_

Primary Risk Score Driver: (Policy Driven Projects Only)

◉ Reliability ○ Environment ○ Health & Safety ○ Not Policy Driven

3.6 *Complexity Level*

○ High Complexity ○ Medium Complexity ◉ Low Complexity ○ N/A

Complexity Score: __15___

3.7 *Next Planned Sanction Review*

4 Financial

4.1 *Business Plan*

Business Plan Name & Period	Project included in approved Business Plan?	Over / Under Business Plan	Project Cost relative to approved Business Plan ($)
NE Distribution Electric Capital Plan FY19 – FY23	○ Yes ◉ No	◉ Over ○ Under ○ NA	4.550M

4.1.1 If cost > approved Business Plan how will this be funded?

Re-allocation of funds from the Breaker Replacement Program within the portfolio has been managed by Resource Planning to meet jurisdictional budgetary, statutory and regulatory requirements.

4.2 *CIAC / Reimbursement*

N/A

4.3 *Cost Summary Table*

					Current Planning Horizon ($M)						
					Yr. 1	Yr. 2	Yr. 3	Yr. 4	Yr. 5	Yr. 6 +	
Project Number	Project Title	Project Estimate Level (%)	Spend	Prior Yrs	2018/19	2019/20	2020/21	2021/22	2022/23	2023/24	Total
C081006	Franklin Sq Breakers Fy19-FY23	Est Lvl (e.g. +/- 10%)	CapEx	-	1.159	1.159	1.159	0.828	-	-	4.305
			OpEx	-	-	-	-	-	-	-	-
			Removal	-	0.066	0.066	0.066	0.047	-	-	0.245
			Total	-	1.225	1.225	1.225	0.875	-	-	4.550
Total Project Sanction			CapEx	-	1.159	1.159	1.159	0.828	-	-	4.305
			OpEx	-	-	-	-	-	-	-	-
			Removal	-	0.066	0.066	0.066	0.047	-	-	0.245
			Total	-	1.225	1.225	1.225	0.875	-	-	4.550

4.4 *Project Budget Summary Table*

Project Costs per Business Plan

		Current Planning Horizon ($M)						
	Prior Yrs	Yr. 1	Yr. 2	Yr. 3	Yr. 4	Yr. 5	Yr. 6 +	
$M	(Actual)	2018/19	2019/20	2020/21	2021/22	2022/23	2023/24	Total
CapEx	0.000	0.000	0.000	0.000	0.000	0.000	0.000	0.000
OpEx	0.000	0.000	0.000	0.000	0.000	0.000	0.000	0.000
Removal	0.000	0.000	0.000	0.000	0.000	0.000	0.000	0.000
Total Cost in Bus. Plan	0.000	0.000	0.000	0.000	0.000	0.000	0.000	0.000

Variance (Business Plan-Project Estimate)

		Current Planning Horizon ($M)						
	Prior Yrs	Yr. 1	Yr. 2	Yr. 3	Yr. 4	Yr. 5	Yr. 6 +	
$M	(Actual)	2018/19	2019/20	2020/21	2021/22	2022/23	2023/24	Total
CapEx	0.000	(1.159)	(1.159)	(1.159)	(0.828)	0.000	0.000	(4.305)
OpEx	0.000	0.000	0.000	0.000	0.000	0.000	0.000	0.000
Removal	0.000	(0.066)	(0.066)	(0.066)	(0.047)	0.000	0.000	(0.245)
Total Cost in Bus. Plan	0.000	(1.225)	(1.225)	(1.225)	(0.875)	0.000	0.000	(4.550)

5 *Key Milestones*

Milestone	Target Date: (Month/Year)
Project Sanction	November 2018
Project Kick-off	November 2018
Procurement	November 2018
Construction Start	February 2019
Construction Complete - CC	January 2022
Project Closure Sanction	March 2022

6 *Climate Change*

Contribution to National Grid's 2050 80% emissions reduction target:	◉ Neutral	○ Positive	○ Negative
Impact on adaptability of network for future climate change:	◉ Neutral	○ Positive	○ Negative

7 Statements of Support

7.1.1 Supporters

The supporters listed have aligned their part of the business to support the project.

Department	Individual	Responsibilities
Investment Planning	Glen DiConza	Endorses relative to 5-year business plan or emergent work
Resource Planning D-Sub	Mark Phillips	Endorses resources, cost, schedule
Distribution Planning	Al Labarre	Endorses scope, design, design standard
Engineering and Design	Mark Larrabee	Endorses scope, design, design standard
Engineering and Design	Leonard Swanson	Endorses scope, design, design standard

7.1.2 Reviewers

The reviewers have provided feedback on the content/language of the paper.

Function	Individual
Finance	Felicia Midkiff
Regulatory	Ed Turieo
Juristictional	Patricia Easterly
Procurement	Diego Chevere
Control Center	Michael Gallagher

7.1.3 List References

N/A

8 ***Decisions***

I:

(a) APPROVE this paper and the investment of $4.550M and a tolerance of +/-10%

(b) NOTE that Banafsheh Tofigh is the Project Manager and has the approved financial delegation.

Signature.....D H. Campbell.....Date....11/29/18

David H. Campbell, Vice President ServCo Business Partnering, USSC Chair

REDACTED

9 [redacted]*pendices*

9.1 *Breaker Positions*

1112, 1121,1123, 1125, 1126, 1130
1141, 1149, 1153, 1160, 1164, 11GT3
2T11, 2T62, 3T11, 1B10G, 2B10G,
2207, 2521, 0764-30, 2326, 4239, 0766

[redacted]